metalrota
Modena - ITALY

PMS BRUSHLESS MOTOR

Type:

B5-BN100

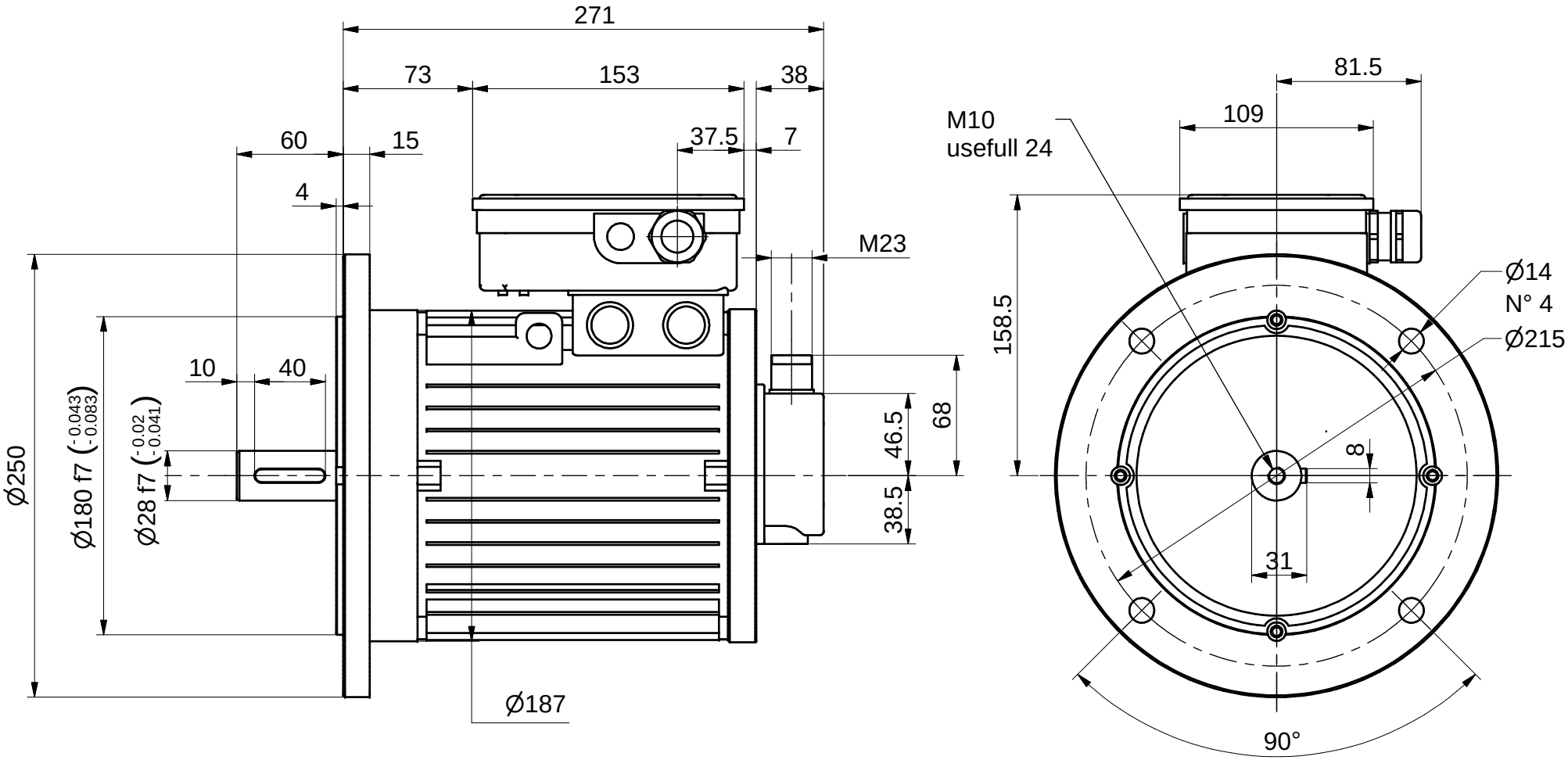

Electromagnetic brake torque Coppia freno elettromagnetico	Optionals:	Weight Peso