ELETTROMANDRINI
ELECTROSPINDLES

HITECO
HIGH TECHNOLOGY COMPONENTS

HITECO
HIGH TECHNOLOGY COMPONENTS

Componenti ad alta tecnologia per produttori di macchine utens

--

High-tech components for machine tool manufacturers.

Hiteco è specializzata nella progettazione e realizzazione di componenti elettromeccanici industriali ad alta tecnologia per le macchine utensili.
Elettromandrini A.T.C, elettromandrini M.T.C, teste birotative, teste di foratura ed aggregati.
--
Hiteco is specialized in design and manufacture of high technology industrial electromechanical components for machine tools. A.T.C. electrospindles, M.T.C. electrospindles, birotary heads, boring units and aggregates.

Hiteco si propone sul mercato internazionale con un'ampia gamma di prodotti per la lavorazione di: legno, plastica, materiali avanzati, vetro, pietra e metallo.
--
Hiteco offers a wide range of products on international market for wood, plastic, advanced materials, glass, stone and metal processing.

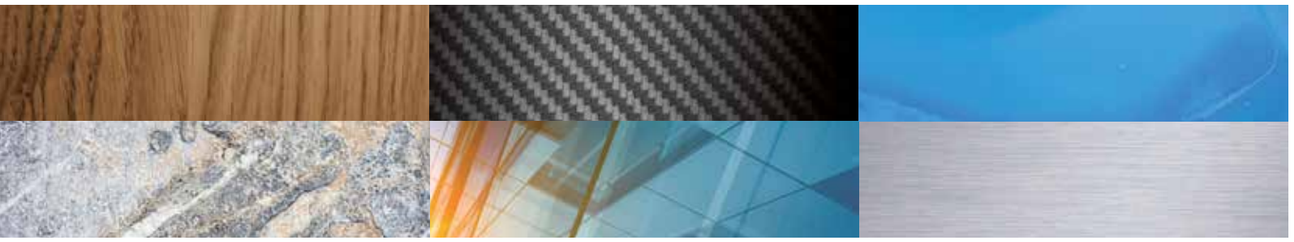

Hiteco nasce nel 1977 come divisione interna di SCM Group , azienda leader mondiale nella costruzione di macchine utensili per la lavorazione di una vasta gamma di materiali, realizzando un percorso di crescita esponenziale. Diventa nel 2008 X Q · X Q L W j G L S U R À W W R S H U servire il mercato terzi. Oggi realizza prodotti di riferimento nel mercato dei componenti, diventando uno tra i più importanti player mondiali nel settore.
--
Hiteco founded in 1977 as an internal division of the SCM Group , leading company in machine tools construction for processing a wide range of materials, had an increasingly exponential growth. In 2008 it become D S U R À W X Q L W I R U H [W H U Q D O F X V W R P H U V Today Hiteco offers key products for the components market, becoming one of the most important world players in the sector.

60% DI FATTURATO TERZI
--
60% OF TURNOVER FROM EXTERNAL CUSTOMERS

PRESENZA NEI 5 CONTINENTI DIRETTA E CAPILLARE
--
DIRECT AND CAPILLARY PRESENCE IN THE 5 CONTINENTS

CIRCA 30 MILIONI/EURO DI FATTURATO
--
30 MILLION EURO OF TURNOVER

CRESCITA ANNUA 2014/2018 > 25%
--
ANNUAL GROWTH 2014/2018 > 25%

HITECO in numeri.
--
Hiteco in numbers.

Una presenza capillare per un servizio best-in-class worldwide.

--

A capillary presence for best-in-class and worldwide service.

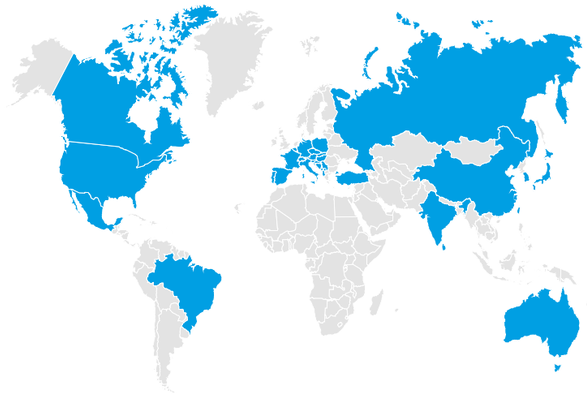

La distribuzione capillare dell'azienda risponde alla volontà di Hiteco di essere vicina al cliente con la presenza sul territorio di tecnici specializzati che sono garanzia di una risposta estremamente rapida e professionale: non solo per ridurre fermi macchina e problemi alla Q S P E V [J P O F N B B O D I F Q F S D S F B S F W B M P S F B H H J V O U P D P O M E innovative. Questa attenzione, oltre ai ridotti tempi di consegna, è uno dei motivi che ha portato Hiteco ad avere la più alta customer satisfation nel mercato internazionale.
--
The widespread distribution of the company responds to the desire of Hiteco to be close to the customer with the presence of specialized technicians on the territory who guarantee an extremely rapid and professional response: not only to reduce machine downtimes and production problems, but also to create added value with the proposal of effective and innovative solutions. Such care, in addition to reduced delivery times, is one of the reason that led Hiteco to have the highest customer satisfaction on the international market.

www.hiteco.net

INDICE
INDEX

Hiteco si riserva il diritto di apportare migliorie sulle tecnologie e i modelli presentati nel catalogo
Hiteco reserves the right to make improvements to the technologies and models presented in the catalog

INDICE POTENZE / POWER INDEX

POWERTECH	POWERTECH 200	POWERTECH 250	POWERTECH 300 COMPACT	POWERTECH 300	POWERTECH 400 HS	POWERTECH 400	POWERTECH 500	POWERTECH 600
POWER @RPM - MAX SPEED								
4/12 24	p. 9		p. 15					
5.5/6 20 (HT)						p. 23		
5.5/12 24			p. 15	p. 17				
6.5/12 36 (HS)		p. 11						
6.5/12 40 (HS)		p. 12						
6.6/12 24				p. 17				
7.5/6 24 (HT)						p. 23		
8/9 18 (HT)							p. 29	
8/12 24				p. 18				
8/12 28 (HS)					p. 21			
8/12 36 (HS)		p. 11						
8/12 40 (HS)		p. 12						
8.5/6 24 (HT)						p. 24		
8.5/12 24						p. 24		
9/6 24 (HT)						p. 26		
9,5/12 24				p. 19				
10/11 24						p. 25		
11/6 10 (HT)								p. 35
11/6 24 (HT)						p. 26		
11/12 20							p. 30	
12/6 18 (HT)							p. 33	
12/12 24						p. 25		
13/7 15 (HT)							p. 29	
13/12 24						p. 27		
16/12 24						p. 27		
18/6 12 (HT)								p. 35
18/12 20							p. 33	

HS= HIGH SPEED
HT= HIGH TORQUE

INDICE POTENZE / POWER INDEX

ROBOTECH	ROBOTECH QX	ROBOTECH QX HS	ROBOTECH PX-HX	ROBOTECH HX 3C	ROBOTECH HD	ROBOTECH QT	ROBOTECH HT	ROBOTECH QM
5.6/18 20					p. 51			
8/15 36 (HS)		p. 41						
8/15 40 (HS)		p. 41						
8.5/12 24	p. 37							
10/7 24 (HT)			p. 43	p. 47				
10/12 24	p. 37							
11/12 24	p. 38							
12/12 24			p. 43	p. 47				
13/6 16 (HT)						p. 53		
15/12 24			p. 44	p. 48				
18/12 24			p. 44	p. 48				
20/10 24			p. 45	p. 49				
25/7 16 (HT)						p. 53		
25/10 24							p. 55	
30/6 13 (HT)								p. 57

CUSTOMTECH	CUSTOMTECH KX	CUSTOMTECH MG
9/6 15		p. 63
13.5/6 15		p. 63
30/7.5 12		p. 64
31/4.5 15	p. 59	
32/4.5 17	p. 59	
32/4.5 24	p. 60	

MULTITECH	MULTITECH MA/ML	MULTITECH QN	MULTITECH MQH	MULTITECH S	MULTITECH XS
0.19/12 12				p. 79	
0.35/12 12					p. 83
0.55/12 12					p. 83
0.65/12 12					p. 84
1.5/12 12				p. 79	
1.8/12 12				p. 80	
4/14 24					
4.5/18 18		p. 73			
4.5/18 24		p. 73			
6/18 18		p. 74			
6/18 24		p. 74			
7.5/12 24	p. 67 - 69				
8/6 9			p. 77		
9.5/12 24	p. 71				
10/12 24	p. 69				
13/6 9			p. 77		

ADDITIONAL EQUIPMENT	
C-AXIS FOR POWERTECH 300-400	p. 86
REFERENCE SLEEVE	p. 86
TOOL HOLDER	p. 87
TOOL FINGER	p. 87
HEAT EXCHANGER	p. 87

IDENTIFICAZIONE ELETTROMANDRINI / ELECTROSPINDLE IDENTIFICATION KEY

Example: QE | 1F | 10/11 | 24 | 63F | NC | CB | EN | BT | OQ | IS

MODELLO (DIMENSIONE CARCASSA) / MODEL (HOUSING DIMENSION)

QD	102 X 119,5 mm
	110 X 111 mm
QE	130 X 140 mm
QF	150 X 160 mm
QM	215 X 245 mm, 230x230 mm
QX	130 X 130 mm
PX	150 X 150 mm
HX	150 X 150 mm
QT	150 X 150 mm
HT	150 X 150 mm
HD	130 X 130 mm
KX	Ø 202 mm
ML/MA	Ø 158, Ø 166, 135 x 137, 157 x 165
MG	200 X 200 mm
QN	102 X 119,5 mm
MQH1	205 X 175 mm
XS	70 X 65 mm

RAFFREDDAMENTO / COOLING TYPE

1F= ELETTROVENTOLA/ ELECTROFAN	
1C= ARIA COMPRESSA/ PRESSED AIR	
2= LIQUIDO/LIQUID	
1= VENTOLA SU ALBERO/ FAN ON SHAFT	

POTENZA NOMINALE (S1) @ VELOCITÀ / RATED POWER (S1) @ SPEED

MAX POTENZA @ VELOCITA'/MAX POWER @ SPEED

VELOCITÀ MAX / MAX SPEED

ATTACCO UTENSILE / TOOL HOLDER

63F = HSK63F
I30 = ISO30
40E = HSK40E
32E = HSK32E
63E = HSK63E
80F = HSK80F
63A = HSK63A
I40 = ISO40
ER32
ER40
ER25
ALBERO/SHAFT, D=12, 16, 30, 40

NASO MANDRINO / SPINDLE NOSE

NC= NASO CORTO/SHORT NOSE
NL= NASO LUNGO/LONG NOSE
CH = COMPACT SHORT NOSE
LH = COMPACT LONG NOSE

CONNESSIONE ELETTRICA / ELECTRIC CONNECTION

CB= CONNESSIONE BASE/ BASIC CONNECTION
CC= CONNESSIONE CIRCOLARE/ CIRCULAR CONNECTION
PP= CONNESSIONE RAPIDA/ PLUG AND PLAY CONNECTION
SC= SENZA CONNETTORE/ FLYING CABLE

ENCODER

ES= ENCODER 1 VPP (SYNUSOIDAL WAVE)
EN= ENCODER TTL (SQUARE WAVE)

VOLTAGGIO / VOLTAGE

BT= BITENSIONE / DUAL VOLTAGE 220V/380V
220 V

OPTIONAL

OQ=OIL MIST+MQL (Minimal Quantity Lubrication)
AT= AIR TOOL
OM= OIL MIST
CTS= LUBRIFICAZIONE CTS/ COOLANT THROUGH THE SHAFT

ALTRE VARIANTI/ OTHER VARIANTS

SENSORE DI VIBRAZIONE/ VIBRATION SENSOR	
SENSORE DI TEMPERATURA/ TEMPERATURE SENSOR	
MONITORAGGIO TEMPERATURA CUSCINETTI/ BEARING TEMPERATURE MONITORING	
MISURATORE DI VELOCITÀ/ SPEED MONITORING	

POWERTECH 200

SUITABLE FOR PROCESSING WOOD, PLASTIC AND COMPOSITE MATERIALS
REDUCED SECTION AND FIXING FLEXIBILITY (AVAILABILITY ON 2 SIDES)
ALSO AVAILABLE WITH HSK 63 F TAPER AND DOUBLE VOLTAGE
CERAMIC BEARINGS
SIMPLE MAINTENANCE WITH SPINDLE KIT MANAGEMENT

LAYOUT HSK 63F CB

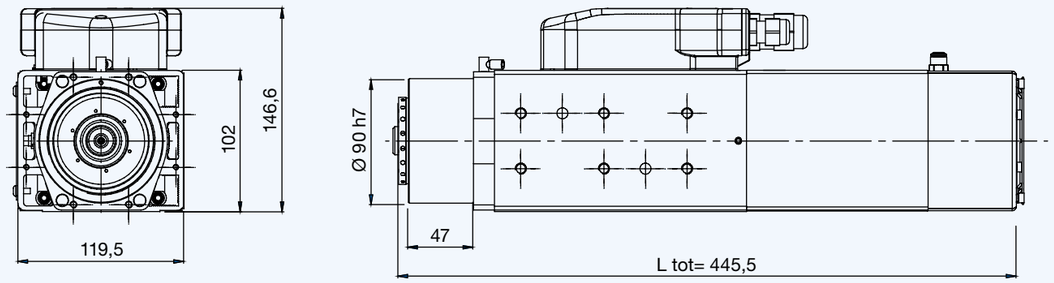

ALTRI LAYOUT / OTHER LAYOUTS

	ΔL	L tot
ISO 30	+6,9 mm	452,40 mm
Aria compressa / Air compressed	ISO30= -29,1 mm	416,4 mm
	HSK63F= -36,0 mm	409,5 mm

QD-1F 4/12 24

PRESTAZIONI / PERFORMANCES

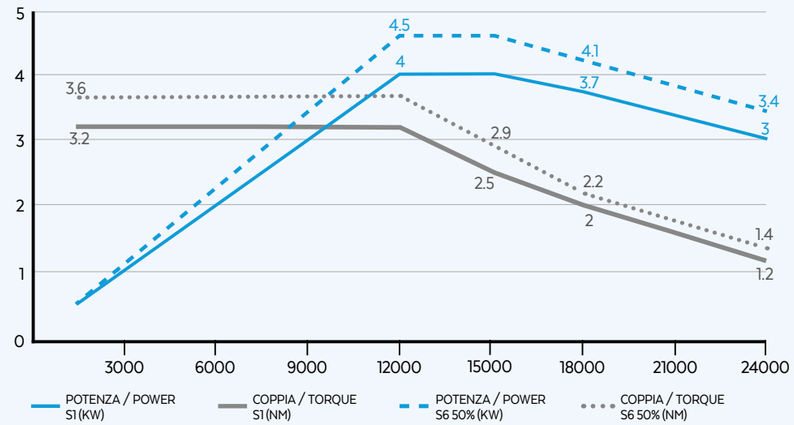

OPZIONALI / OPTIONALS

- Circular connector CC
- Bearings temperature monitoring
- Dual voltage 220V-380V
- Speed monitoring
- Quick connection PP
- Vibration sensor

SPECIFICHE TECNICHE / TECHNICAL SPECIFICATIONS

- S1-S6 kW 4/4.5
- S1-S6 A 9/10.7
- Poles 4
- S1-S6 Nm 3.2/3.6
- Volt 380
- Supply inverter
- rpm 24000
- kg 18

EQUIPAGGIAMENTO / EQUIPMENT

- HSK 63F
- Electrofan cooling
- Double effect pneumatic cylinder
- Automatic tool changer
- Ceramic ball bearings
- Pressed air cooling
- Grease lubrication
- Sensors s1, s2,s3
- Taper cleaning
- Labyrinth with air seal
- ISO 30

POWERTECH 250

SUITABLE FOR PROCESSING ALUMINIUM, PLASTIC AND LIGHT ALLOYS.
VERY POWERFUL WITH HIGH NUMBER OF REVS UP TO 40K RPM
5 BEARINGS FOR HIGH STIFFNESS
AVAILABLE WITH LAYOUT FOR 3 AND 5 AXES

LAYOUT HSK40E / HSK32E CC

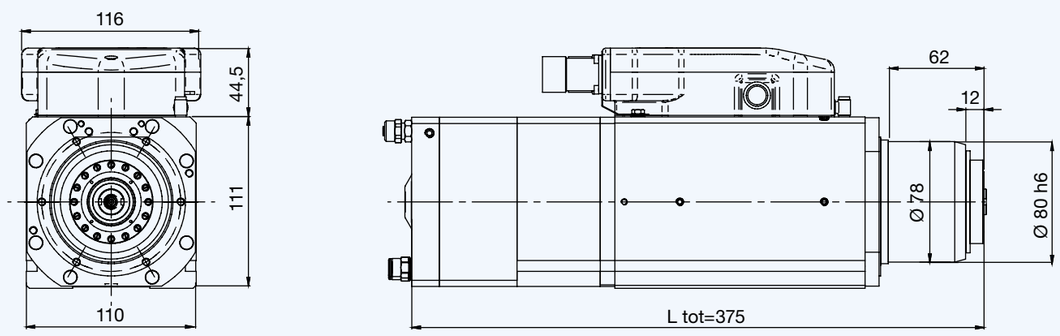

LAYOUT HSK40E / HSK32E SC

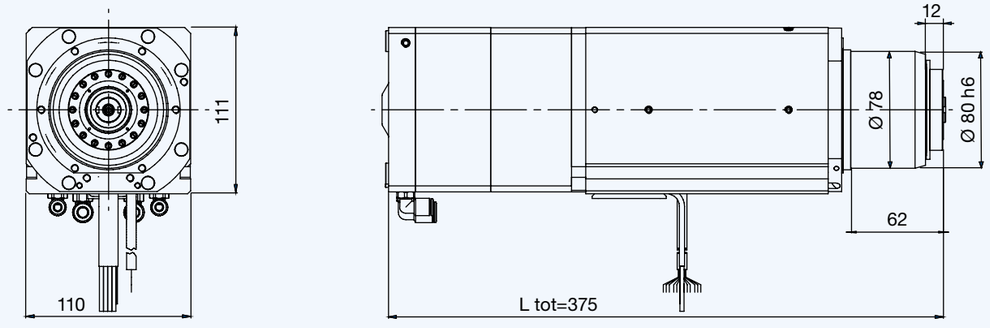

QD-2 6.5/12 36 HIGH SPEE

PRESTAZIONI / PERFORMANCES

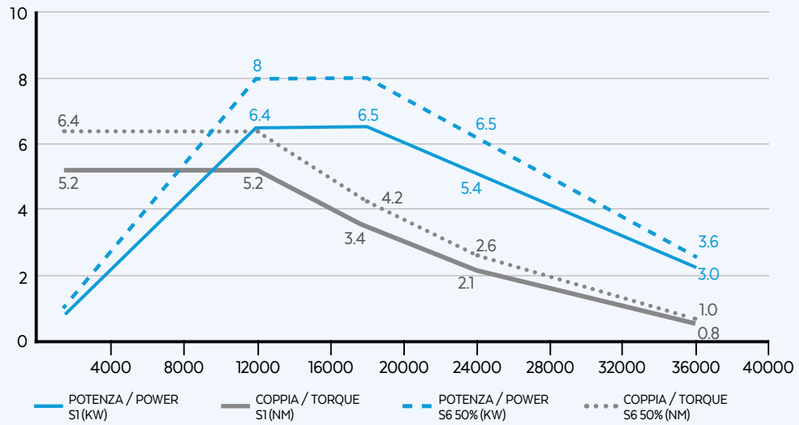

OPZIONALI / OPTIONALS

- Encoder 1 Vpp or TTL
- Bearings temperature monitoring
- Quick connection PP
- Speed monitoring
- Vibration sensor

SPECIFICHE TECNICHE / TECHNICAL SPECIFICATIONS

S1-S6 kW	6.5/8	S1-S6 A	20.5/23	Poles	4
S1-S6 Nm	5.2/6.4	Volt	380	Supply	inverter
rpm	36000	kg	17		

EQUIPAGGIAMENTO / EQUIPMENT

- HSK 40E
- Liquid cooling
- Double effect pneumatic cylinder
- Automatic tool changer
- Ceramic ball bearings
- Labyrinth with air seal
- Grease lubrication
- Sensors S1,S2,S3,S5
- Circular male connector
- Taper cleaning

QD-2 8/12 36 HIGH SPEE

PRESTAZIONI / PERFORMANCES

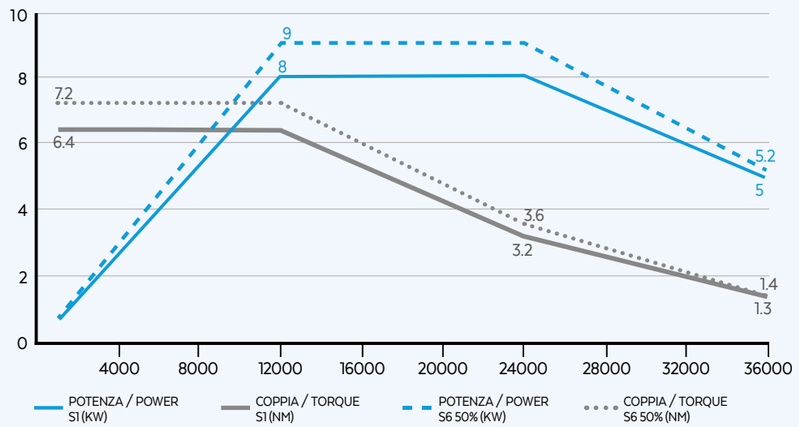

OPZIONALI / OPTIONALS

- Encoder 1 Vpp or TTL
- Bearings temperature monitoring
- Quick connection PP
- Speed monitoring
- Vibration sensor

SPECIFICHE TECNICHE / TECHNICAL SPECIFICATIONS

S1-S6 kW	8/9	S1-S6 A	24/26	Poles	4
S1-S6 Nm	6.4/7.2	Volt	380	Supply	inverter
rpm	36000	kg	17		

EQUIPAGGIAMENTO / EQUIPMENT

- HSK 40E
- Liquid cooling
- Double effect pneumatic cylinder
- Automatic tool changer
- Ceramic ball bearings
- Labyrinth with air seal
- Grease lubrication
- Sensors S1,S2,S3,S5
- Circular male connector
- Taper cleaning

QD-2 6.5/12 40 — HIGH SPEE

PRESTAZIONI / PERFORMANCES

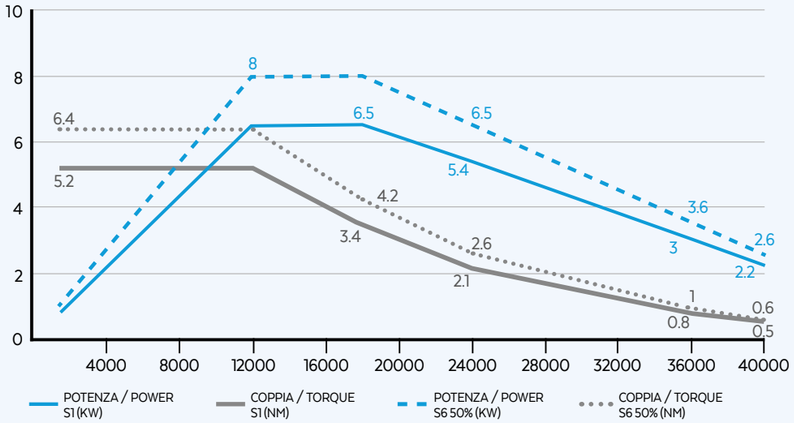

OPZIONALI / OPTIONALS

- Encoder 1 Vpp or TTL
- Bearings temperature monitoring
- Quick connection PP
- Speed monitoring
- Vibration sensor

SPECIFICHE TECNICHE / TECHNICAL SPECIFICATIONS

- S1-S6 kW 6.5/8
- S1-S6 A 20.5/23
- Poles 4
- S1-S6 Nm 5.2/6.4
- Volt 380
- Supply inverter
- rpm 40000
- kg 17

EQUIPAGGIAMENTO / EQUIPMENT

- HSK 32E
- Liquid cooling
- Double effect pneumatic cylinder
- Automatic tool changer
- Ceramic ball bearings
- Labyrinth with air seal
- Grease lubrication
- Sensors s1,s2,s3,s5
- Circular male connector
- Taper cleaning

QD-2 8/12 40 — HIGH SPEE

PRESTAZIONI / PERFORMANCES

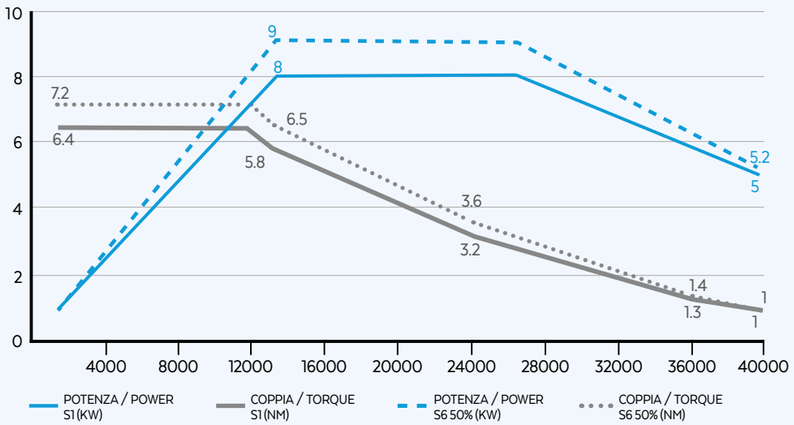

OPZIONALI / OPTIONALS

- Encoder 1 Vpp or TTL
- Bearings temperature monitoring
- Quick connection PP
- Speed monitoring
- Vibration sensor

SPECIFICHE TECNICHE / TECHNICAL SPECIFICATIONS

- S1-S6 kW 8/9
- S1-S6 A 24/26
- Poles 4
- S1-S6 Nm 6.4/7.2
- Volt 380
- Supply inverter
- rpm 40000
- kg 17

EQUIPAGGIAMENTO / EQUIPMENT

- HSK 32E
- Liquid cooling
- Double effect pneumatic cylinder
- Automatic tool changer
- Ceramic ball bearings
- Labyrinth with air seal
- Grease lubrication
- Sensors s1,s2,s3,s5
- Circular male connector
- Taper cleaning

POWERTECH 300 COMPACT

SUITABLE FOR PROCESSING WOOD, ALUMINIUM AND PLASTIC
COMPACT LAYOUT WITH REDUCED LENGTH BULK
ALSO AVAILABLE WITH HSK 63F TAPER
CERAMIC BEARINGS

LAYOUT ISO30 CB

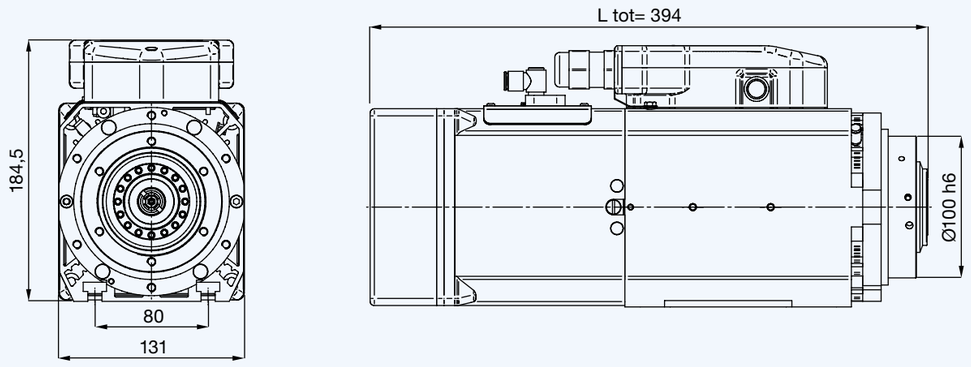

ALTRI LAYOUT / OTHER LAYOUTS

	ΔL	L tot
Aria compressa / Air compressed	ISO30= -30 mm	360 mm
	HSK63F= -30 mm	360 mm

QE-1F 4 12/24

PRESTAZIONI / PERFORMANCES

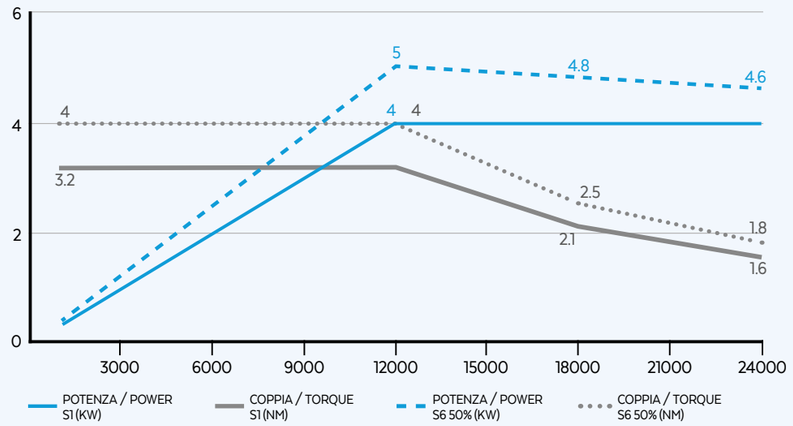

OPZIONALI / OPTIONALS

- Encoder 1 Vpp or TTL
- Bearings temperature monitoring
- Circular connector CC
- Speed monitoring
- Quick connection PP
- Vibration sensor
- Sensor s5
- Dual voltage 220V-380V

SPECIFICHE TECNICHE / TECHNICAL SPECIFICATIONS

S1-S6 kW 4/5	S1-S6 A 8.5/10	Poles 2	
S1-S6 Nm 3.2/4	Volt 380	Supply inverter	
rpm 24000	kg 19		

EQUIPAGGIAMENTO / EQUIPMENT

- HSK 63F
- Electrofan cooling
- Single effect pneumatic cylinder
- Automatic tool changer
- Ceramic ball bearings
- Pressed air cooling
- Labyrinth with air seal
- Sensors s1, s2, s3
- Taper cleaning
- Grease lubrication
- ISO 30

QE-1F 5.5 12/24

PRESTAZIONI / PERFORMANCES

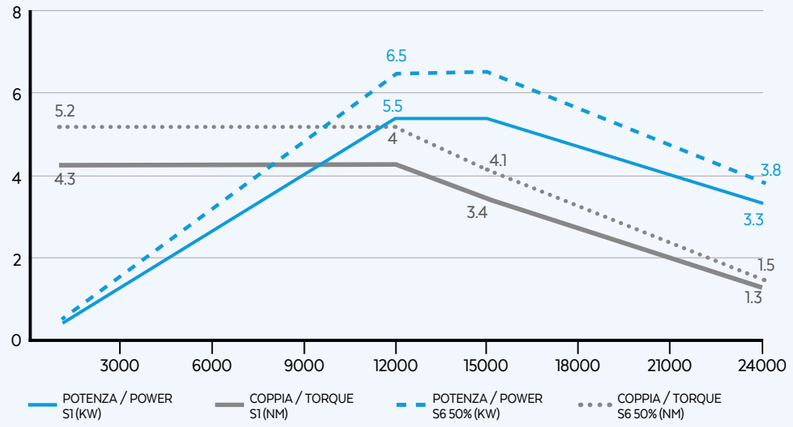

OPZIONALI / OPTIONALS

- Encoder 1 Vpp or TTL
- Bearings temperature monitoring
- Circular connector CC
- Speed monitoring
- Quick connection PP
- Vibration sensor
- Sensor s5
- Dual voltage 220V-380V

SPECIFICHE TECNICHE / TECHNICAL SPECIFICATIONS

S1-S6 kW 5.5/6.5	S1-S6 A 11/13	Poles 4	
S1-S6 Nm 4/4.3	Volt 380	Supply inverter	
rpm 24000	kg 19		

EQUIPAGGIAMENTO / EQUIPMENT

- HSK 63F
- Electrofan cooling
- Single effect pneumatic cylinder
- Automatic tool changer
- Ceramic ball bearings
- Pressed air cooling
- Labyrinth with air seal
- Sensors s1, s2, s3
- Taper cleaning
- Grease lubrication
- ISO 30

POWERTECH 300

SUITABLE FOR PROCESSING WOOD, PLASTIC AND COMPOSITE MATERIALS
WIDE RANGE OF POWERS TO SATISFY ANY PROCESSING TYPE
AVAILABILITY OF LIQUID COOLING FOR INTENSE USAGE
SIMPLE MAINTENANCE WITH SPINDLE KIT MANAGEMENT

LAYOUT HSK 63F CB

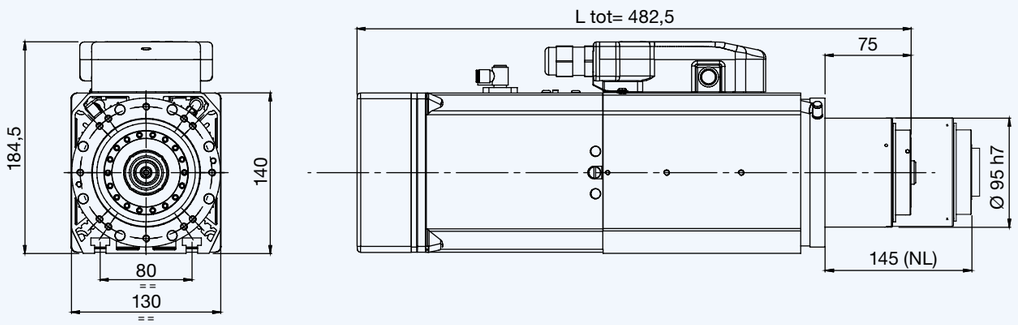

ALTRI LAYOUT / OTHER LAYOUTS

	ΔL	L tot
ISO 30	+6,9 mm	489,4 mm
Aria compressa / Air compressed	ISO30= -44 mm	438,5 mm
	HSK63F= -44 mm	438,5 mm
Encoder (1 Vpp or TTL)	+7 mm	489,5 mm
Liquido/ Liquid	-50 mm	432,5 mm

QE-1F 5.5/12 24

PRESTAZIONI / PERFORMANCES

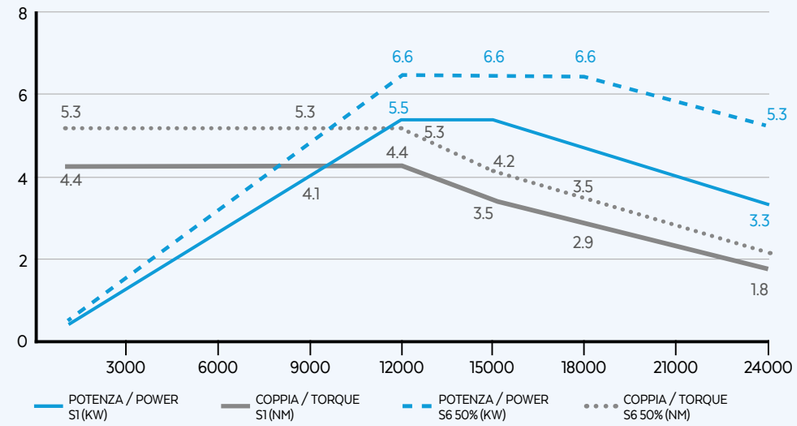

OPZIONALI / OPTIONALS

- Encoder 1 Vpp or TTL
- Bearings temperature monitoring
- Circular connector CC
- C-axis available
- Quick connection PP
- Speed monitoring
- Long nose
- Vibration sensor
- Air tool
- Sensor S5

SPECIFICHE TECNICHE / TECHNICAL SPECIFICATIONS

S1-S6 kW	5.5/6.6	S1-S6 A	13.5/14.5
S1-S6 Nm	4.4/5.3	Volt	380
rpm	24000	kg	21
Poles	4	Supply	inverter

EQUIPAGGIAMENTO / EQUIPMENT

- ISO 30
- Electrofan cooling
- Double effect pneumatic cylinder
- Automatic tool changer
- Ceramic ball bearings
- Pressed air cooling
- Labyrinth with air seal
- Sensors s1, s2, s3
- Taper cleaning
- Grease lubrication
- HSK 63F

QE-1F 6.6/12 24

PRESTAZIONI / PERFORMANCES

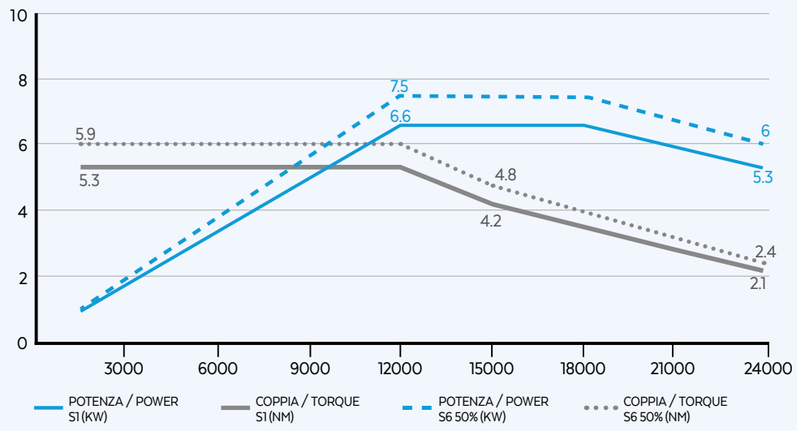

OPZIONALI / OPTIONALS

- Encoder 1 Vpp or TTL
- Bearings temperature monitoring
- Circular connector CC
- C-axis available
- Quick connection PP
- Speed monitoring
- Long nose
- Vibration sensor
- Air tool
- Sensor S5
- Dual voltage 220V-380V

SPECIFICHE TECNICHE / TECHNICAL SPECIFICATIONS

S1-S6 kW	6.6/7.5	S1-S6 A	14.5/16
S1-S6 Nm	5.3/5.9	Volt	380
rpm	24000	kg	21
Poles	4	Supply	inverter

EQUIPAGGIAMENTO / EQUIPMENT

- ISO 30
- Electrofan cooling
- Double effect pneumatic cylinder
- Automatic tool changer
- Ceramic ball bearings
- Pressed air cooling
- Labyrinth with air seal
- Sensors s1, s2, s3
- Taper cleaning
- Grease lubrication
- HSK 63F

QE-1F 8/12 24

PRESTAZIONI / PERFORMANCES

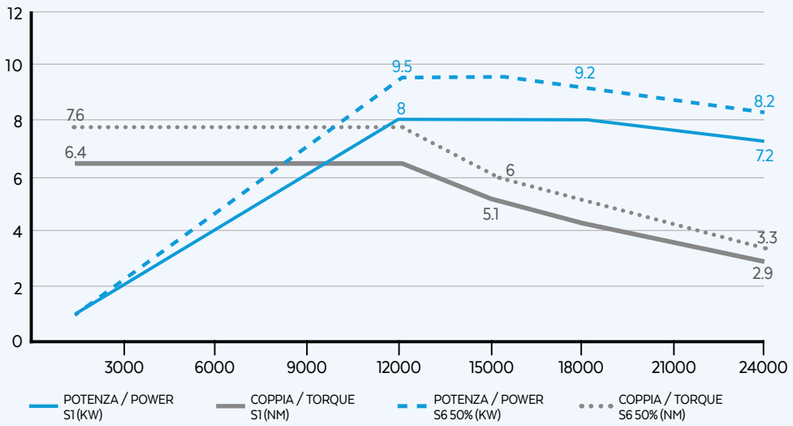

OPZIONALI / OPTIONALS

- Circular connector CC
- Bearings temperature monitoring
- Quick connection PP
- C-axis available
- Long nose
- Speed monitoring
- Air tool
- Vibration sensor
- Sensor S5
- Dual voltage 220V-380V

SPECIFICHE TECNICHE / TECHNICAL SPECIFICATIONS

- S1-S6 kW 8/9.5
- S1-S6 A 18.5/20.5
- Poles 4
- S1-S6 Nm 6.4/7.6
- Volt 380
- Supply inverter
- rpm 24000
- kg 21

EQUIPAGGIAMENTO / EQUIPMENT

- ISO 30
- Electrofan cooling
- Double effect pneumatic cylinder
- Automatic tool changer
- Ceramic ball bearings
- Pressed air cooling
- Labyrinth with air seal
- Sensors s1, s2, s3
- Taper cleaning
- Grease lubrication
- HSK 63F

QE-2 9,5/12 24

PRESTAZIONI / PERFORMANCES

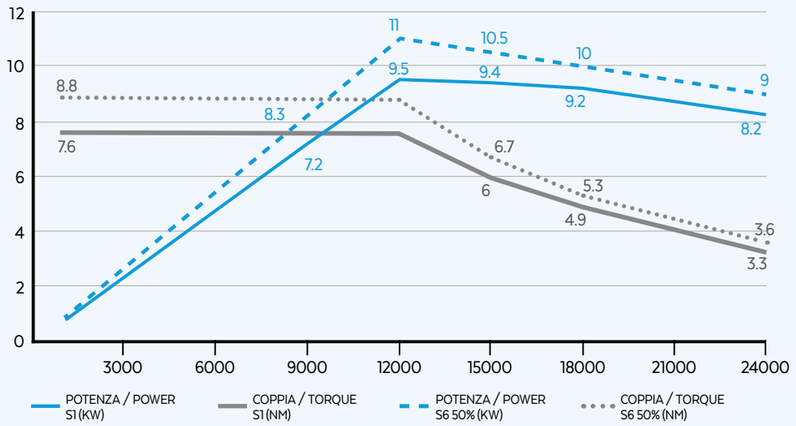

OPZIONALI / OPTIONALS

- Encoder 1 Vpp or TTL
- Bearings temperature monitoring
- Long nose
- C-axis available
- Air tool
- Speed monitoring
- Quick connection PP
- Vibration sensor
- Sensor S5

SPECIFICHE TECNICHE / TECHNICAL SPECIFICATIONS

- S1-S6 kW 9.5/11
- S1-S6 A 20.5/23
- Poles 4
- S1-S6 Nm 7.6/8.8
- Volt 380
- Supply inverter
- rpm 24000
- kg 21

EQUIPAGGIAMENTO / EQUIPMENT

- HSK 63F
- Liquid cooling
- Double effect pneumatic cylinder
- Automatic tool changer
- Ceramic ball bearings
- Labyrinth with air seal
- Sensors s1, s2, s3
- Taper cleaning
- ISO 30
- Grease lubrication

QE-2 8/12 24

PRESTAZIONI / PERFORMANCES

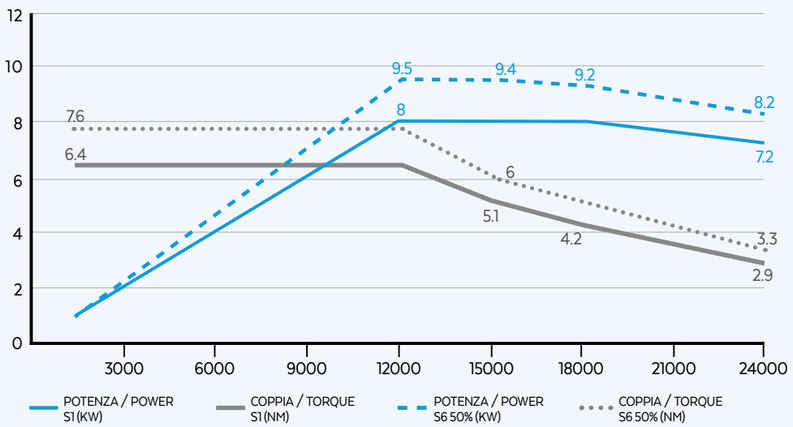

OPZIONALI / OPTIONALS

- Encoder 1 Vpp or TTL
- Bearings temperature monitoring
- Long nose
- C-axis available
- Air tool
- Speed monitoring
- Quick connection PP
- Vibration sensor
- Sensor S5

SPECIFICHE TECNICHE / TECHNICAL SPECIFICATIONS

- S1-S6 kW 8/9.5
- S1-S6 A 18.5/20.5
- Poles 4
- S1-S6 Nm 6.4/7.6
- Volt 380
- Supply inverter
- rpm 24000
- kg 21

EQUIPAGGIAMENTO / EQUIPMENT

- HSK 63F
- Liquid cooling
- Double effect pneumatic cylinder
- Automatic tool changer
- Ceramic ball bearings
- Labyrinth with air seal
- Sensors s1, s2, s3
- Grease lubrication
- Taper cleaning
- ISO 30

POWERTECH 400 HS

SUITABLE FOR PROCESSING ALUMINIUM AND COMPOSITE MATERIALS
LONG NOSE LAYOUT TO GUARANTEE STRONG RIGIDITY
HIGH SPEED FOR HIGH CUTTING SPEED OPERATIONS WITH AIR COOLING

QE-1F 8/12 28 — HIGH SPEE

PRESTAZIONI / PERFORMANCES

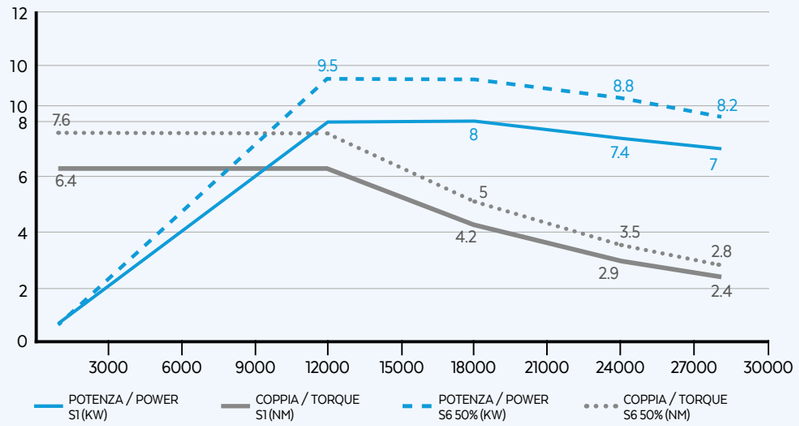

OPZIONALI / OPTIONALS

- Encoder 1 Vpp or TTL
- Bearings temperature monitoring
- Dual voltage 220V-380V
- C-axis available
- Air tool
- Speed monitoring
- Quick connection PP
- Vibration sensor
- Sensor S5

SPECIFICHE TECNICHE / TECHNICAL SPECIFICATIONS

S1-S6 kW 8/9	S1-S6 A 17/19	Poles 4	
S1-S6 Nm 6.4/7.6	Volt 380	Supply inverter	
rpm 28000	kg 25		

EQUIPAGGIAMENTO / EQUIPMENT

- ISO 30
- Electrofan cooling
- Double effect pneumatic cylinder
- Automatic tool changer
- Ceramic ball bearings
- Labyrinth with air seal
- Sensors s1, s2, s3
- Grease lubrication
- Circular male connector
- Taper cleaning

LAYOUT HSK 63F CC

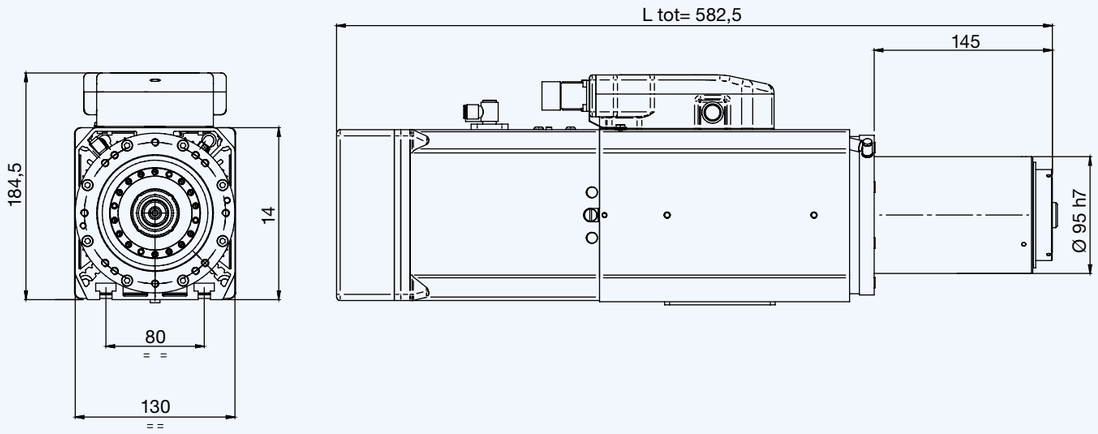

ALTRI LAYOUT / OTHER LAYOUTS

	ΔL	L tot
ISO 30	+6,9 mm	589,4 mm
Encoder (1 Vpp or TTL)	+7 mm	589,5 mm

POWERTECH 400

SUITABLE FOR PROCESSING WOOD AND ALUMINIUM
VERY POWERFUL AND HIGH TORQUES UP TO 16 KW
AVAILABILITY OF LIQUID COOLING FOR INTENSE USAGE
OPTION OF DRILLING, FLOWDRILL AND THREADING.
SIMPLE MAINTENANCE WITH SPINDLE KIT MANAGEMENT

LAYOUT HSK 63F CB

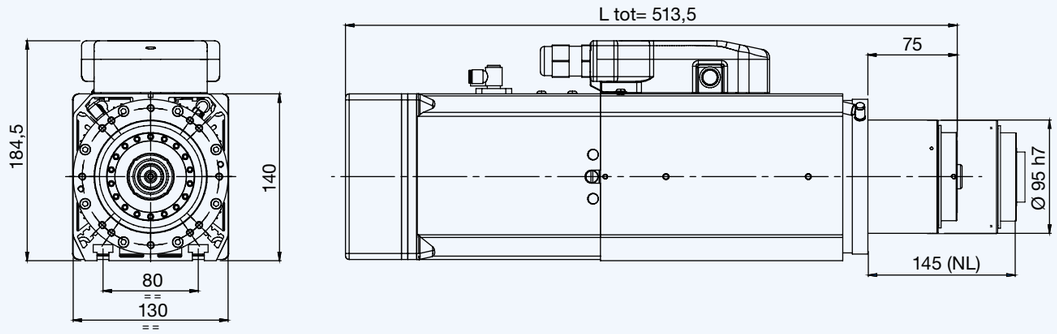

ALTRI LAYOUT / OTHER LAYOUTS

Aria	ΔL	L tot
ISO 30	+6,9 mm	520,6 mm
Aria compressa / Air compressed	ISO30= -75 mm	438,5 mm
	HSK63F= -75 mm	438,5 mm
Encoder (1 Vpp or TTL)	+7 mm	520,5 mm
	+7 mm	470,5 mm*
Liquido / Liquid	-50 mm	463,5 mm

*Ltot per versione raffreddamento a liquido / Ltot liquid cooling option

QE-1F 5.5/6 20 — HIGH TORQU

PRESTAZIONI / PERFORMANCES

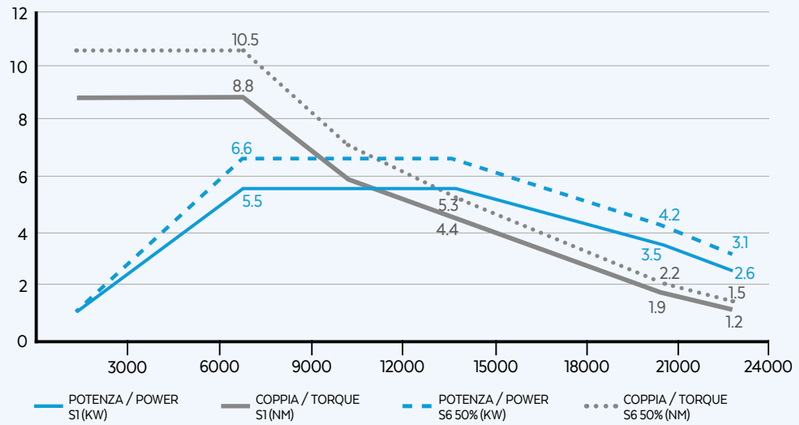

OPZIONALI / OPTIONALS

- Encoder 1 Vpp or TTL
- Bearings temperature monitoring
- Circular connector CC
- C-axis available
- Quick connection PP
- Speed monitoring
- Air tool
- Vibration sensor
- Long nose
- Sensor S5

SPECIFICHE TECNICHE / TECHNICAL SPECIFICATIONS

S1-S6 kW	5.5/6.6
S1-S6 A	12/13
Poles	4
S1-S6 Nm	8.8/10.5
Volt	380
Supply	inverter
rpm	20000
kg	24

EQUIPAGGIAMENTO / EQUIPMENT

- ISO 30
- Electrofan cooling
- Double effect pneumatic cylinder
- Automatic tool changer
- Ceramic ball bearings
- Labyrinth with air seal
- Sensors s1, s2, s3
- Grease lubrication
- Taper cleaning
- HSK 63F

QE-1F 7.5/6 24 — HIGH TORQU

PRESTAZIONI / PERFORMANCES

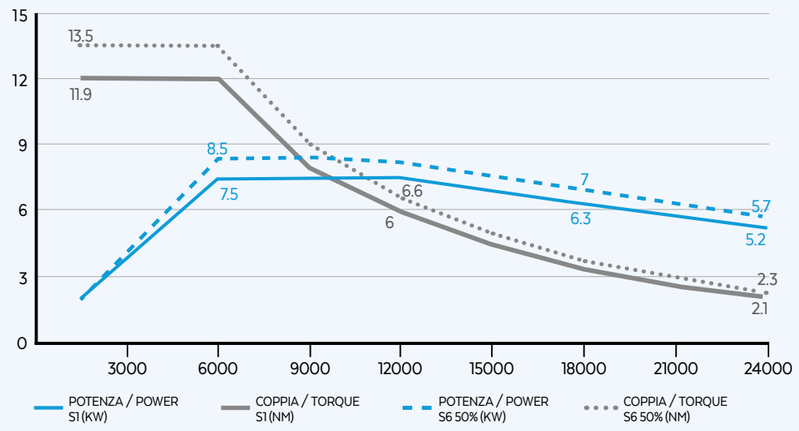

OPZIONALI / OPTIONALS

- Encoder 1 Vpp or TTL
- Bearings temperature monitoring
- Circular connector CC
- C-axis available
- Quick connection PP
- Speed monitoring
- Air tool
- Vibration sensor
- Long nose
- Sensor S5

SPECIFICHE TECNICHE / TECHNICAL SPECIFICATIONS

S1-S6 kW	7.5/8.5
S1-S6 A	19.5/21.5
Poles	4
S1-S6 Nm	11.9/13.5
Volt	380
Supply	inverter
rpm	24000
kg	24

EQUIPAGGIAMENTO / EQUIPMENT

- ISO 30
- Electrofan cooling
- Double effect pneumatic cylinder
- Automatic tool changer
- Ceramic ball bearings
- Labyrinth with air seal
- Sensors s1, s2, s3
- Grease lubrication
- Taper cleaning
- HSK 63F

QE-1F 8.5/6 24 HIGH TORQU

PRESTAZIONI / PERFORMANCES

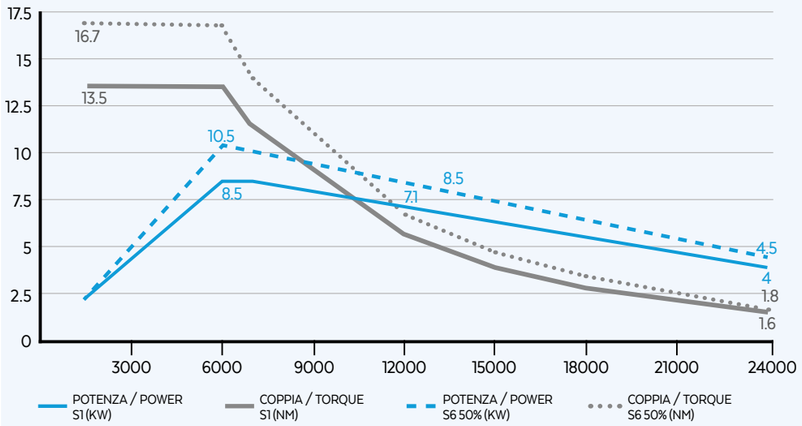

OPZIONALI / OPTIONALS

- Encoder 1 Vpp or TTL
- Bearings temperature monitoring
- Circular connector CC
- C-axis available
- Quick connection PP
- Speed monitoring
- Long nose
- Vibration sensor
- Air tool
- Sensor S5
- Voltage 220V

SPECIFICHE TECNICHE / TECHNICAL SPECIFICATIONS

- S1-S6 kW 8.5/10.5
- S1-S6 A 20/25
- Poles 4
- S1-S6 Nm 13.5/16.7
- Volt 380
- Supply inverter
- rpm 24000
- kg 24

EQUIPAGGIAMENTO / EQUIPMENT

- ISO 30
- Electrofan cooling
- Double effect pneumatic cylinder
- Automatic tool changer
- Ceramic ball bearings
- Labyrinth with air seal
- Sensors s1, s2, s3
- Grease lubrication
- Taper cleaning
- HSK 63F

QE-1F 10/11 24

PRESTAZIONI / PERFORMANCES

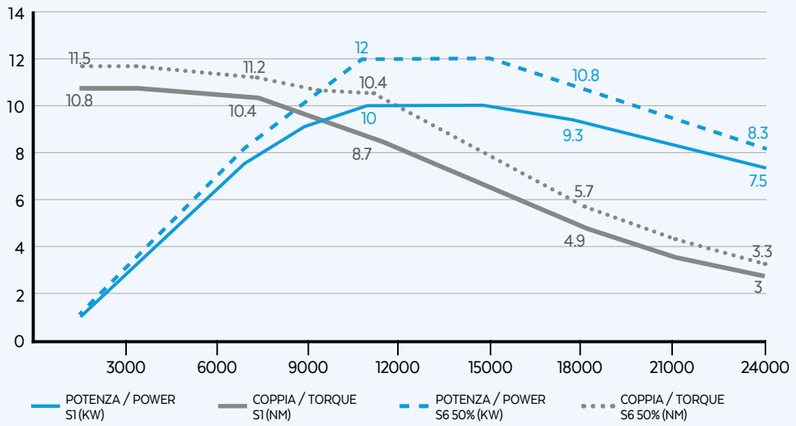

OPZIONALI / OPTIONALS

- Encoder 1 Vpp or TTL
- Bearings temperature monitoring
- Circular connector CC
- C-axis available
- Quick connection PP
- Speed monitoring
- Dual voltage 220V-380V
- Vibration sensor
- Voltage 220V
- Sensor S5
- Air tool
- Long nose

SPECIFICHE TECNICHE / TECHNICAL SPECIFICATIONS

- S1-S6 kW 10/12
- S1-S6 A 25/27
- Poles 4
- S1-S6 Nm 10.8/11.5
- Volt 380
- Supply inverter
- rpm 24000
- kg 23

EQUIPAGGIAMENTO / EQUIPMENT

- ISO 30
- Electrofan cooling
- Double effect pneumatic cylinder
- Automatic tool changer
- Ceramic ball bearings
- Pressed air cooling
- Sensors s1, s2, s3
- Grease lubrication
- Taper cleaning
- Labyrinth with air seal
- HSK 63F

QE-1F 8.5/12 24

PRESTAZIONI / PERFORMANCES

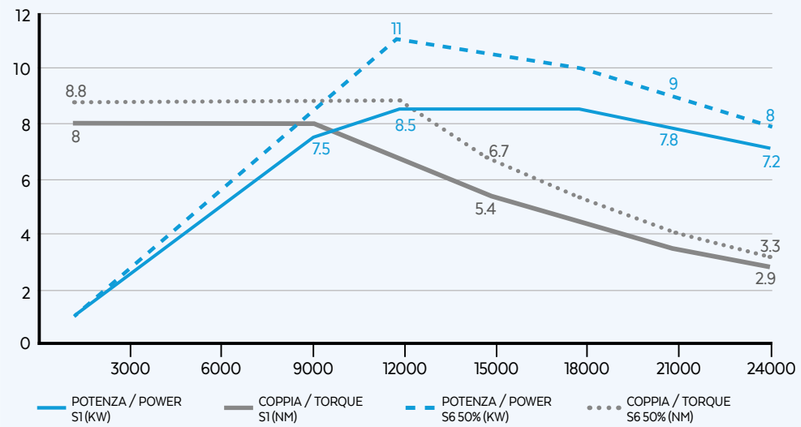

OPZIONALI / OPTIONALS

- Encoder 1 Vpp or TTL
- Bearings temperature monitoring
- Circular connector CC
- C-axis available
- Quick connection PP
- Speed monitoring
- Long nose
- Vibration sensor
- Air tool
- Sensor S5
- Voltage 220V

SPECIFICHE TECNICHE / TECHNICAL SPECIFICATIONS

- S1-S6 kW 8/9.5
- S1-S6 A 18.5/20.5
- Poles 4
- S1-S6 Nm 6.4/7.6
- Volt 380
- Supply inverter
- rpm 24000
- kg 21

EQUIPAGGIAMENTO / EQUIPMENT

- ISO 30
- Electrofan cooling
- Double effect pneumatic cylinder
- Automatic tool changer
- Ceramic ball bearings
- Labyrinth with air seal
- Sensors s1, s2, s3
- Grease lubrication
- Taper cleaning
- Pressed air cooling
- HSK 63F

QE-1F 12/12 24

PRESTAZIONI / PERFORMANCES

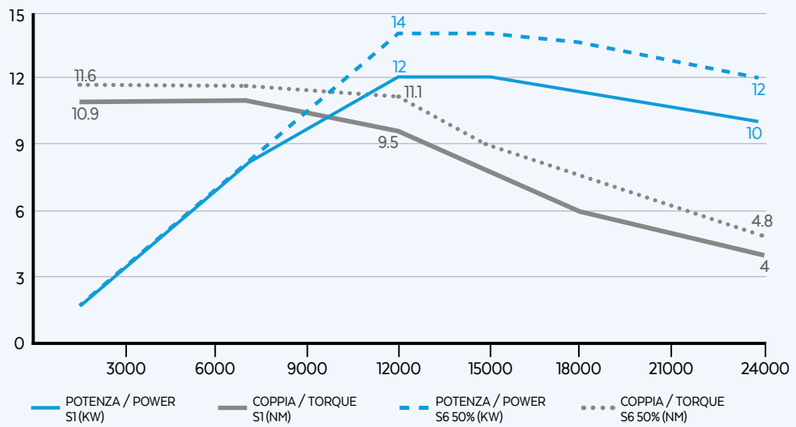

OPZIONALI / OPTIONALS

- Encoder 1 Vpp or TTL
- Bearings temperature monitoring
- Circular connector CC
- C-axis available
- Quick connection PP
- Speed monitoring
- Air tool
- Vibration sensor
- Long nose
- Sensor S5

SPECIFICHE TECNICHE / TECHNICAL SPECIFICATIONS

- S1-S6 kW 12/14
- S1-S6 A 23/27
- Poles 4
- S1-S6 Nm 10.9/11.6
- Volt 380
- Supply inverter
- rpm 24000
- kg 23

EQUIPAGGIAMENTO / EQUIPMENT

- HSK 63F
- Electrofan cooling
- Double effect pneumatic cylinder
- Automatic tool changer
- Ceramic ball bearings
- Pressed air cooling
- Sensors s1, s2, s3
- Grease lubrication
- Taper cleaning
- Labyrinth with air seal

QE-2 9/6 24 HIGH TORQU

PRESTAZIONI / PERFORMANCES

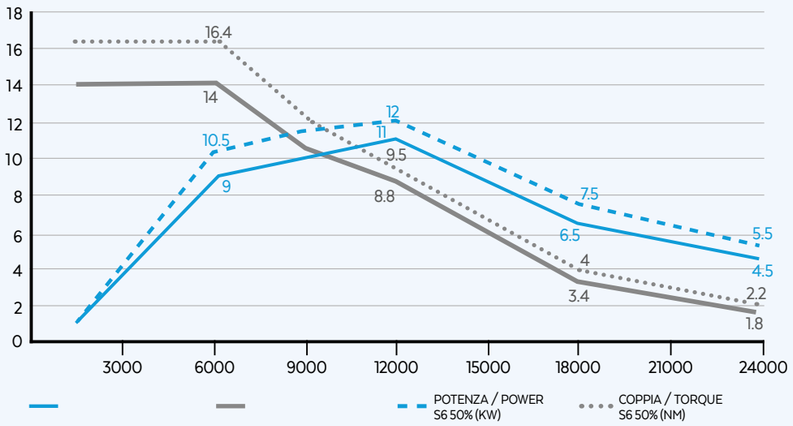

OPZIONALI / OPTIONALS

SPECIFICHE TECNICHE / TECHNICAL SPECIFICATIONS

EQUIPAGGIAMENTO / EQUIPMENT

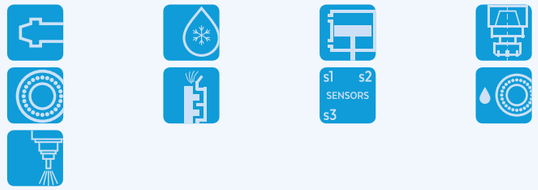

QE-2 11/6 24 HIGH TORQU

PRESTAZIONI / PERFORMANCES

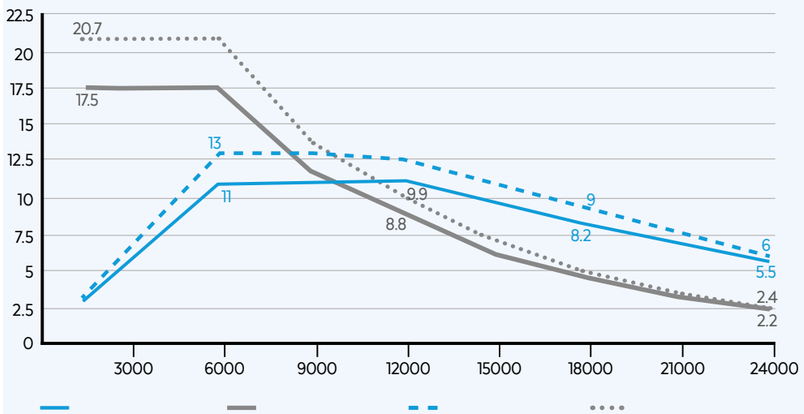

OPZIONALI / OPTIONALS

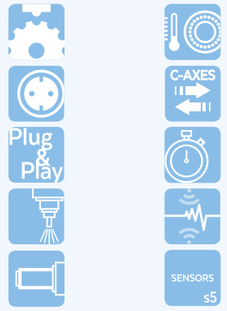

SPECIFICHE TECNICHE / TECHNICAL SPECIFICATIONS

EQUIPAGGIAMENTO / EQUIPMENT

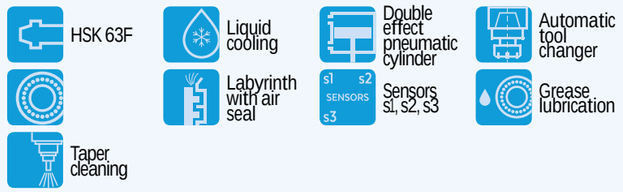

QE-2 13/12 24

PRESTAZIONI / PERFORMANCES

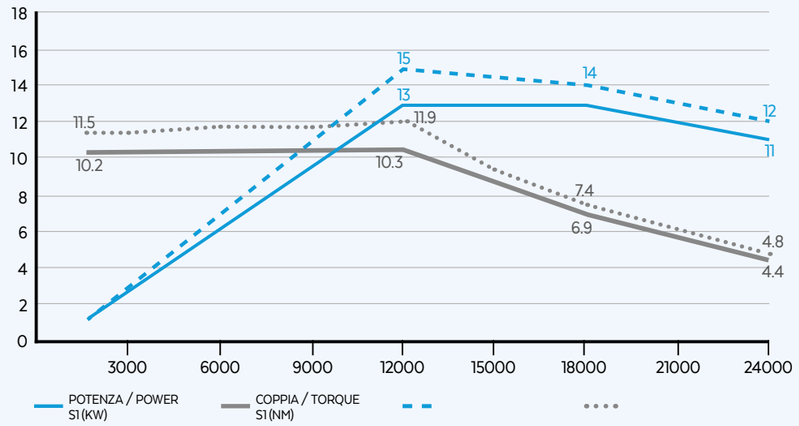

OPZIONALI / OPTIONALS

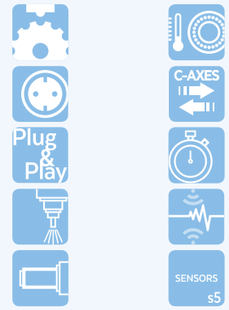

SPECIFICHE TECNICHE / TECHNICAL SPECIFICATIONS

EQUIPAGGIAMENTO / EQUIPMENT

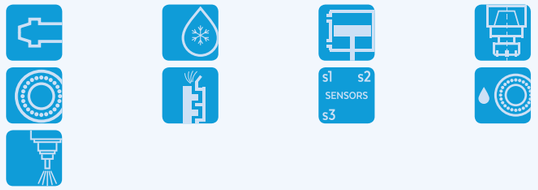

QE-2 16/12 24

PRESTAZIONI / PERFORMANCES

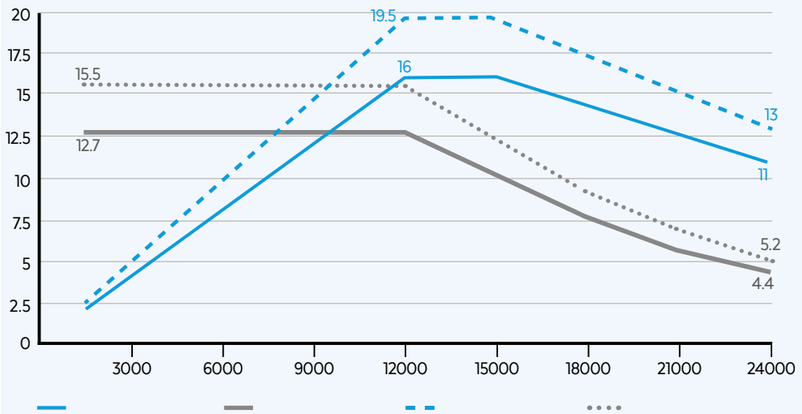

OPZIONALI / OPTIONALS

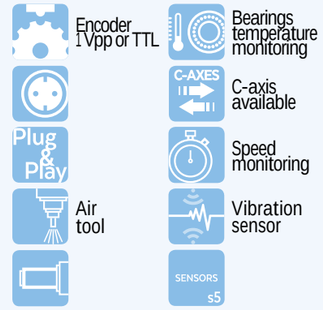

SPECIFICHE TECNICHE / TECHNICAL SPECIFICATIONS

EQUIPAGGIAMENTO / EQUIPMENT

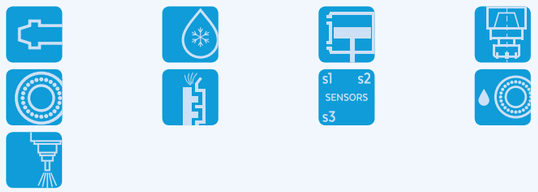

ROBOTECH QX HS

SUITABLE FOR PROCESSING PLASTIC, ALUMINIUM AND COMPOSITE MATERIALS
HIGH ROTATION SPEED UP TO 40,000 RPM
OPTIMAL LAYOUT FOR BI-ROTATIONAL HEADS AT 90° AND 50°
ADVERTISING, PLASTIC AND ADVANCED MATERIALSÌ

LAYOUT HSK 32E / HSK 40E

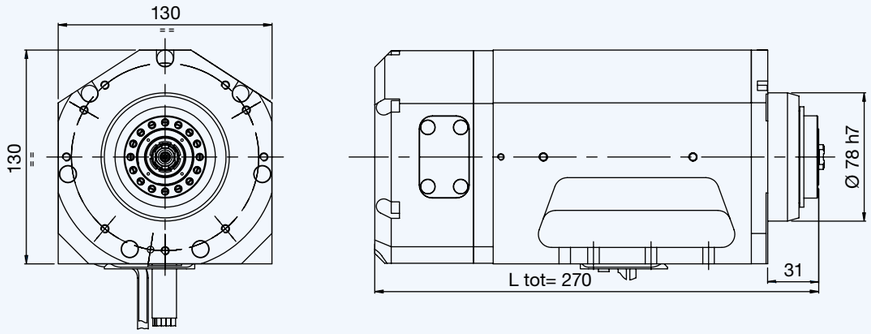

QX-2 8/15 36 HIGH SPEE

PRESTAZIONI / PERFORMANCES

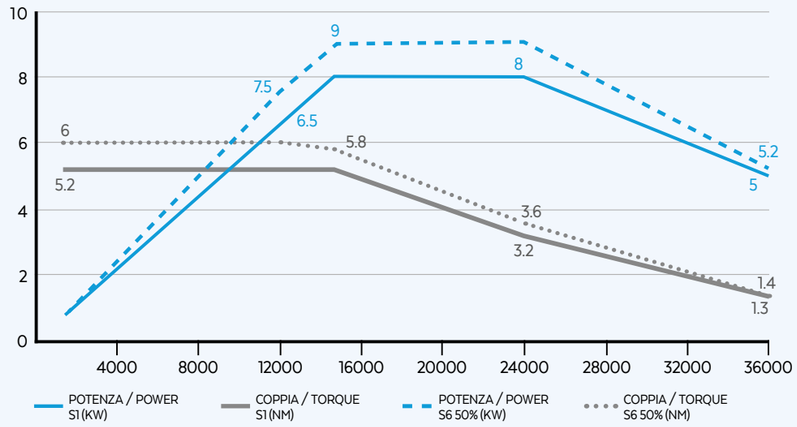

OPZIONALI / OPTIONALS

- Encoder 1 Vpp or TTL
- Bearings temperature monitoring
- Speed monitoring
- Vibration sensor
- Sensor s5

SPECIFICHE TECNICHE / TECHNICAL SPECIFICATIONS

S1-S6 kW	8/9	S1-S6 A	23/25
S1-S6 Nm	5.2/6	Volt	380
rpm	36000	kg	18
Poles	4	Supply	inverter

EQUIPAGGIAMENTO / EQUIPMENT

- HSK 40E
- Liquid cooling
- Single effect pneumatic cylinder
- Automatic tool changer
- Ceramic ball bearings
- Labyrinth with air seal
- Sensors s1, s2, s3
- Grease lubrication
- Taper cleaning

QX-2 8/15 40 HIGH SPEE

PRESTAZIONI / PERFORMANCES

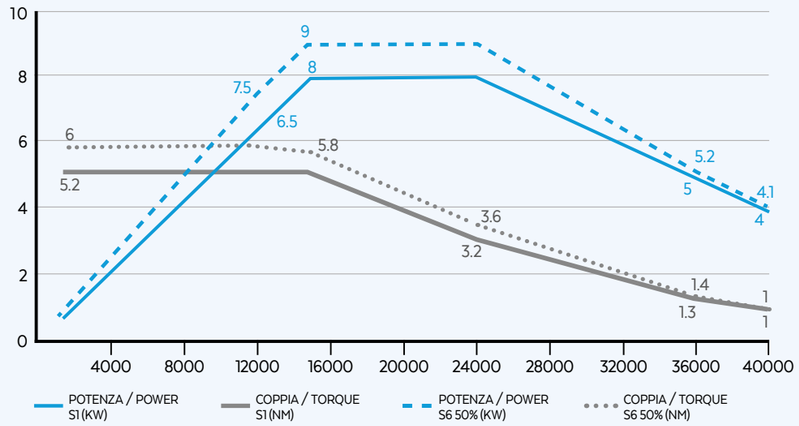

OPZIONALI / OPTIONALS

- Encoder 1 Vpp or TTL
- Bearings temperature monitoring
- Speed monitoring
- Vibration sensor
- Sensor s5

SPECIFICHE TECNICHE / TECHNICAL SPECIFICATIONS

S1-S6 kW	8/9	S1-S6 A	23/25
S1-S6 Nm	5.2/6	Volt	380
rpm	40000	kg	18
Poles	4	Supply	inverter

EQUIPAGGIAMENTO / EQUIPMENT

- HSK 32E
- Liquid cooling
- Single effect pneumatic cylinder
- Automatic tool changer
- Ceramic ball bearings
- Labyrinth with air seal
- Sensors s1, s2, s3
- Grease lubrication
- Taper cleaning

ROBOTECH PX-HX

SUITABLE FOR PROCESSING WOOD, ALUMINIUM AND COMPOSITE MATERIALS
POWER UP TO 20 KW AND HIGH TORQUES
OPTIMAL LAYOUT FOR BI-ROTATIONAL HEADS AT 90° AND 50°
WIDE RANGE OF CONFIGURATIONS WITH ENCODER, 5 BEARINGS, AIR TOOL, MQL AND OIL MIST

LAYOUT HSK 63F

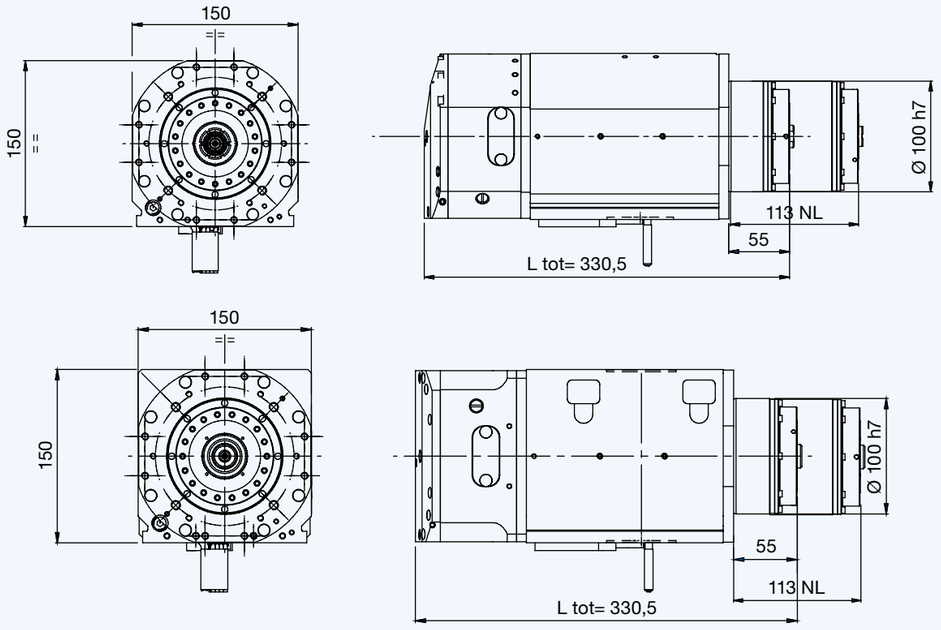

PX/HX-2 10/7 24 — HIGH TORQU

PRESTAZIONI / PERFORMANCES

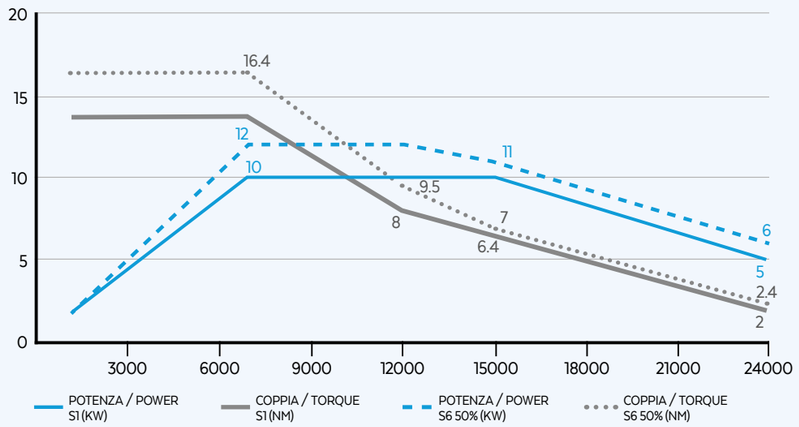

OPZIONALI / OPTIONALS

- Encoder 1 Vpp or TTL
- Bearings temperature monitoring
- Long nose
- Speed monitoring
- Air tool
- Vibration sensor
- Sensor s5
- HSK 63E/63A
- Oil mist / MQL

SPECIFICHE TECNICHE / TECHNICAL SPECIFICATIONS

S1-S6 kW	10/12	S1-S6 A	21/25	Poles	4
S1-S6 Nm	13.6/16.4	Volt	380	Supply	inverter
rpm	24000	kg	25		

EQUIPAGGIAMENTO / EQUIPMENT

- HSK 63F
- Liquid cooling
- Single effect pneumatic cylinder
- Automatic tool changer
- Ceramic ball bearings
- Labyrinth with air seal
- Sensors s1, s2, s3
- Grease lubrication
- Taper cleaning

PX/HX-2 12/12 24

PRESTAZIONI / PERFORMANCES

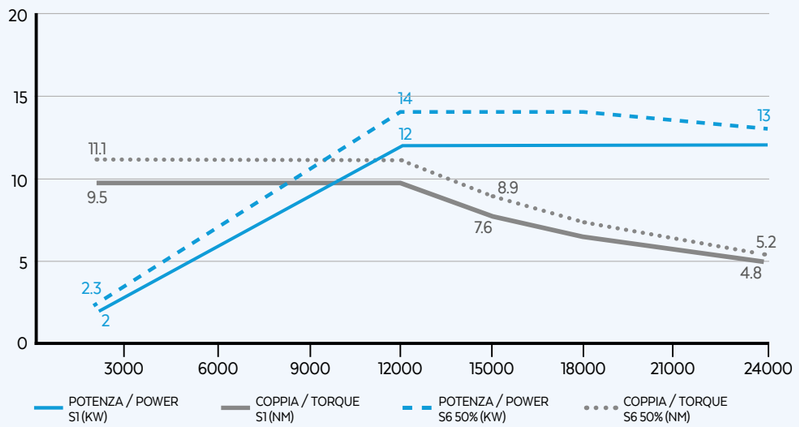

OPZIONALI / OPTIONALS

- Encoder 1 Vpp or TTL
- Bearings temperature monitoring
- Long nose
- Speed monitoring
- Air tool
- Vibration sensor
- Sensor s5
- HSK 63E/63A
- Oil mist / MQL

SPECIFICHE TECNICHE / TECHNICAL SPECIFICATIONS

S1-S6 kW	12/14	S1-S6 A	26/29	Poles	4
S1-S6 Nm	9.5/11.1	Volt	380	Supply	inverter
rpm	24000	kg	25		

EQUIPAGGIAMENTO / EQUIPMENT

- HSK 63F
- Liquid cooling
- Single effect pneumatic cylinder
- Automatic tool changer
- Ceramic ball bearings
- Labyrinth with air seal
- Sensors s1, s2, s3
- Grease lubrication
- Taper cleaning

PX/HX-2 15/12 24

PRESTAZIONI / PERFORMANCES

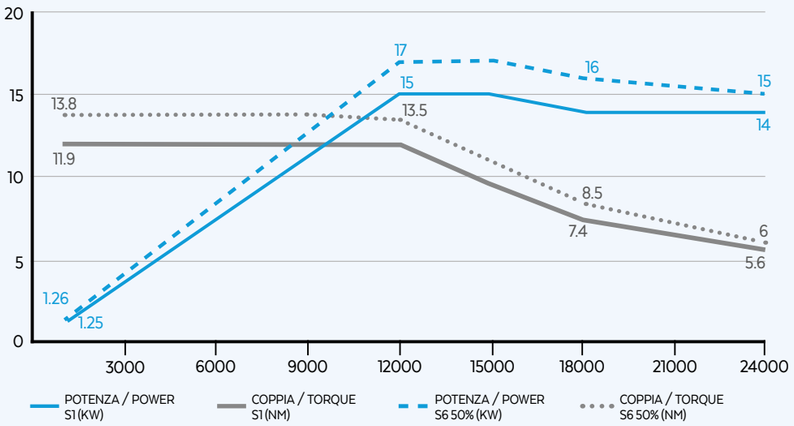

OPZIONALI / OPTIONALS

- Encoder 1 Vpp or TTL
- Bearings temperature monitoring
- Long nose
- Speed monitoring
- Air tool
- Vibration sensor
- Sensor s5
- HSK 63E/63A
- Oil mist / MQL

SPECIFICHE TECNICHE / TECHNICAL SPECIFICATIONS

- S1-S6 kW 15/17
- S1-S6 A 30/33
- Poles 4
- S1-S6 Nm 11.9/13.8
- Volt 380
- Supply inverter
- rpm 24000
- kg 25

EQUIPAGGIAMENTO / EQUIPMENT

- HSK 63F
- Liquid cooling
- Single effect pneumatic cylinder
- Automatic tool changer
- Ceramic ball bearings
- Labyrinth with air seal
- Sensors s1, s2, s3
- Grease lubrication
- Taper cleaning

PX/HX-2 18/12 24

PRESTAZIONI / PERFORMANCES

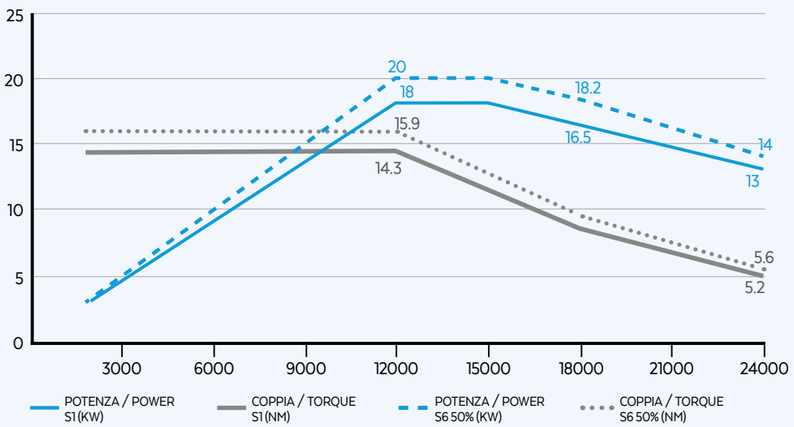

OPZIONALI / OPTIONALS

- Encoder 1 Vpp or TTL
- Bearings temperature monitoring
- Long nose
- Speed monitoring
- Air tool
- Vibration sensor
- Sensor s5
- HSK 63E/63A
- Oil mist / MQL

SPECIFICHE TECNICHE / TECHNICAL SPECIFICATIONS

- S1-S6 kW 18/20
- S1-S6 A 35/38.5
- Poles 4
- S1-S6 Nm 14.3/15.9
- Volt 380
- Supply inverter
- rpm 24000
- kg 25

EQUIPAGGIAMENTO / EQUIPMENT

- HSK 63F
- Liquid cooling
- Single effect pneumatic cylinder
- Automatic tool changer
- Ceramic ball bearings
- Labyrinth with air seal
- Sensors s1, s2, s3
- Grease lubrication
- Taper cleaning

PX/HX-2 20/10 24 (SYNCRONOUS)

PRESTAZIONI / PERFORMANCES

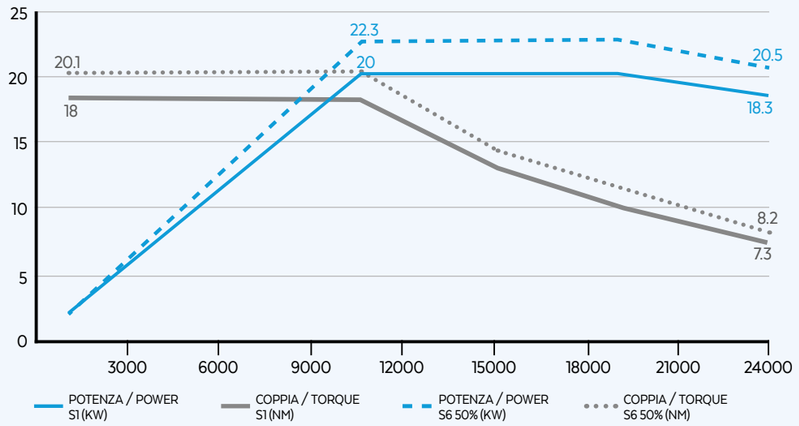

OPZIONALI / OPTIONALS

- Long nose
- Bearings temperature monitoring
- Air tool
- Speed monitoring
- Sensor s5
- Vibration sensor
- Oil mist / MQL
- HSK 63E

SPECIFICHE TECNICHE / TECHNICAL SPECIFICATIONS

- S1-S6 kW 20/22.3
- S1-S6 A 48/50
- Poles 4
- S1-S6 Nm 17.8/20.1
- Volt 380
- Supply inverter
- rpm 24000
- kg 25

EQUIPAGGIAMENTO / EQUIPMENT

- HSK 63A
- Liquid cooling
- Single effect pneumatic cylinder
- Automatic tool changer
- Ceramic ball bearings
- Labyrinth with air seal
- Sensors s1, s2, s3
- Grease lubrication
- Taper cleaning
- Encoder 1 Vpp

ROBOTECH HX 3C

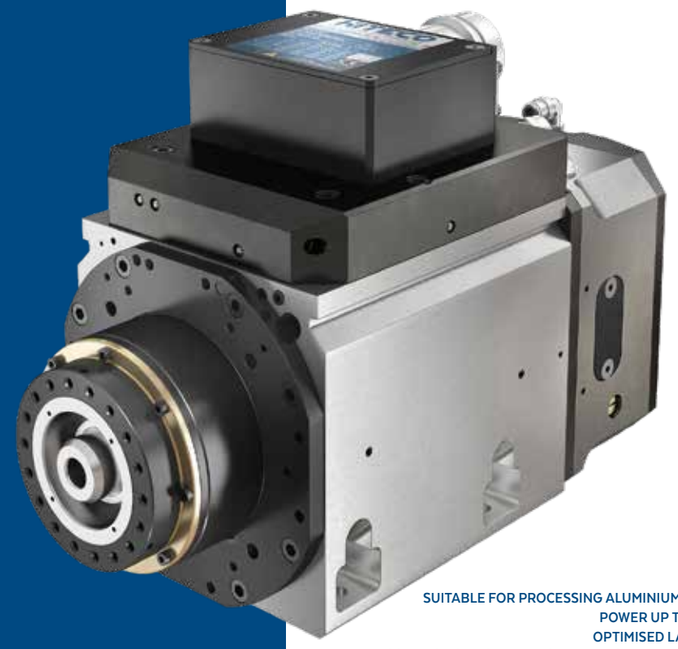

SUITABLE FOR PROCESSING ALUMINIUM AND COMPOSITE MATERIALS
POWER UP TO 20 KW AND HIGH TORQUES
OPTIMISED LAYOUT FOR 3 AXES MACHINES
CONNECTION TO THE MACHINE VIA STANDARD COMMERCIAL CONNECTORS
WIDE RANGE OF CONFIGURATIONS WITH ENCODER, 5 BEARINGS,
AIR TOOL, MQL AND OIL MIST

LAYOUT HSK 63F 3C

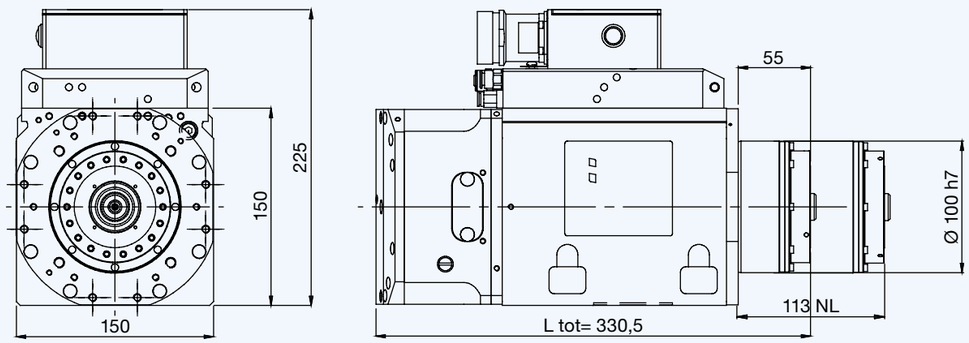

HX-2 10/7 24 3C — HIGH TORQU

PRESTAZIONI / PERFORMANCES

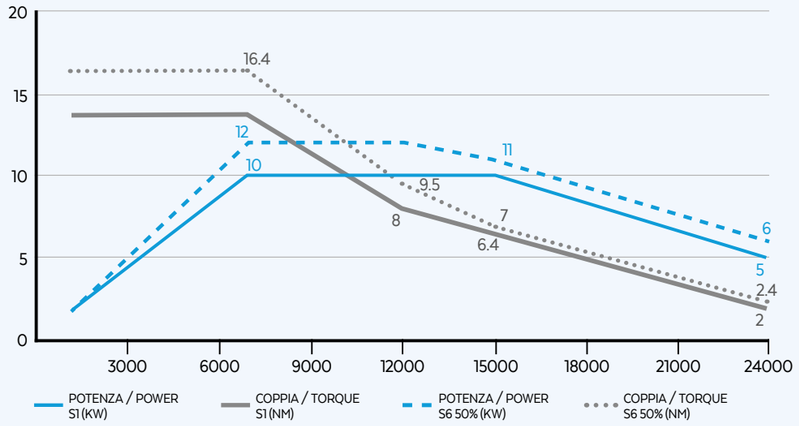

OPZIONALI / OPTIONALS

- Encoder 1 Vpp or TTL
- Bearings temperature monitoring
- Circular connector CC
- Speed monitoring
- Long nose
- Vibration sensor
- Air tool
- HSK 63E/63A
- Sensor S5
- Oil mist / MQL

SPECIFICHE TECNICHE / TECHNICAL SPECIFICATIONS

S1-S6 kW	10/12
S1-S6 A	21/25
Poles	4
S1-S6 Nm	13.6/16.4
Volt	380
Supply	inverter
rpm	24000
kg	25

EQUIPAGGIAMENTO / EQUIPMENT

- HSK 63F
- Liquid cooling
- Single effect pneumatic cylinder
- Automatic tool changer
- Ceramic ball bearings
- Labyrinth with air seal
- Sensors s1, s2, s3
- Grease lubrication
- Circular male connector
- Taper cleaning

HX-2 12/12 24 3C

PRESTAZIONI / PERFORMANCES

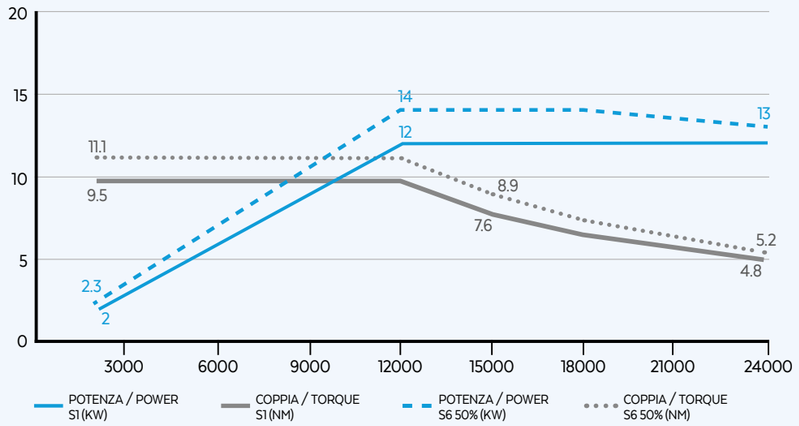

OPZIONALI / OPTIONALS

- Encoder 1 Vpp or TTL
- Bearings temperature monitoring
- Circular connector CC
- Speed monitoring
- Long nose
- Vibration sensor
- Air tool
- HSK 63E/63A
- Sensor S5
- Oil mist / MQL

SPECIFICHE TECNICHE / TECHNICAL SPECIFICATIONS

S1-S6 kW	12/14
S1-S6 A	26/29
Poles	4
S1-S6 Nm	9.5/11.1
Volt	380
Supply	inverter
rpm	24000
kg	25

EQUIPAGGIAMENTO / EQUIPMENT

- HSK 63F
- Liquid cooling
- Single effect pneumatic cylinder
- Automatic tool changer
- Ceramic ball bearings
- Labyrinth with air seal
- Sensors s1, s2, s3
- Grease lubrication
- Circular male connector
- Taper cleaning

HX-2 15/12 24 3C

PRESTAZIONI / PERFORMANCES

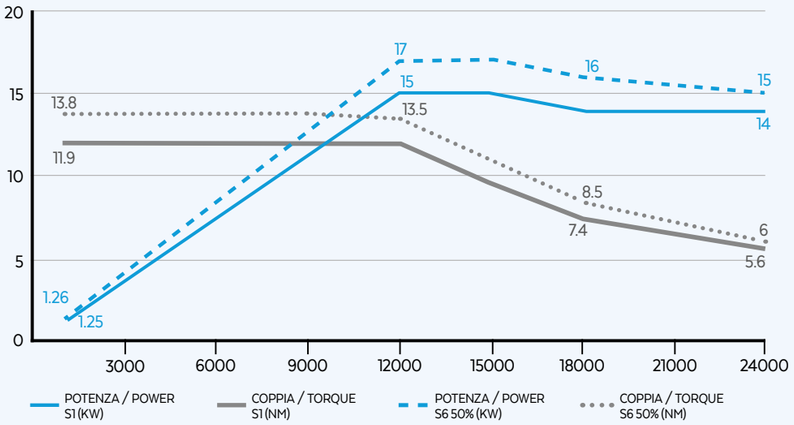

OPZIONALI / OPTIONALS

- Encoder 1 Vpp or TTL
- Bearings temperature monitoring
- Circular connector CC
- Speed monitoring
- Long nose
- Vibration sensor
- Air tool
- HSK 63E/63A
- Sensor S5
- Oil mist / MQL

SPECIFICHE TECNICHE / TECHNICAL SPECIFICATIONS

- S1-S6 kW 15/17
- S1-S6 A 30/33
- Poles 4
- S1-S6 Nm 11.9/13.8
- Volt 380
- Supply inverter
- rpm 24000
- kg 25

EQUIPAGGIAMENTO / EQUIPMENT

- HSK 63F
- Liquid cooling
- Single effect pneumatic cylinder
- Automatic tool changer
- Ceramic ball bearings
- Labyrinth with air seal
- Sensors s1, s2, s3
- Grease lubrication
- Circular male connector
- Taper cleaning

HX-2 18/12 24 3C

PRESTAZIONI / PERFORMANCES

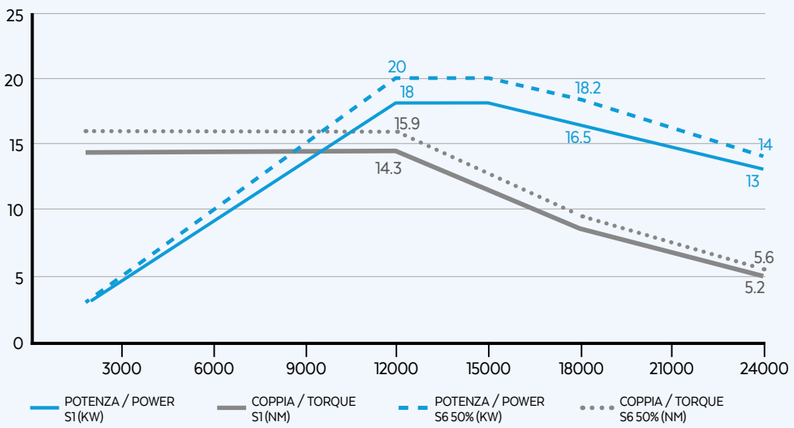

OPZIONALI / OPTIONALS

- Encoder 1 Vpp or TTL
- Bearings temperature monitoring
- Circular connector CC
- Speed monitoring
- Long nose
- Vibration sensor
- Air tool
- HSK 63E/63A
- Sensor S5
- Oil mist / MQL

SPECIFICHE TECNICHE / TECHNICAL SPECIFICATIONS

- S1-S6 kW 18/20
- S1-S6 A 35/38.5
- Poles 4
- S1-S6 Nm 14.3/15.9
- Volt 380
- Supply inverter
- rpm 24000
- kg 25

EQUIPAGGIAMENTO / EQUIPMENT

- HSK 63F
- Liquid cooling
- Single effect pneumatic cylinder
- Automatic tool changer
- Ceramic ball bearings
- Labyrinth with air seal
- Sensors s1, s2, s3
- Grease lubrication
- Circular male connector
- Taper cleaning

HX-2 20/10 24 3C (SYNCRONOUS)

PRESTAZIONI / PERFORMANCES

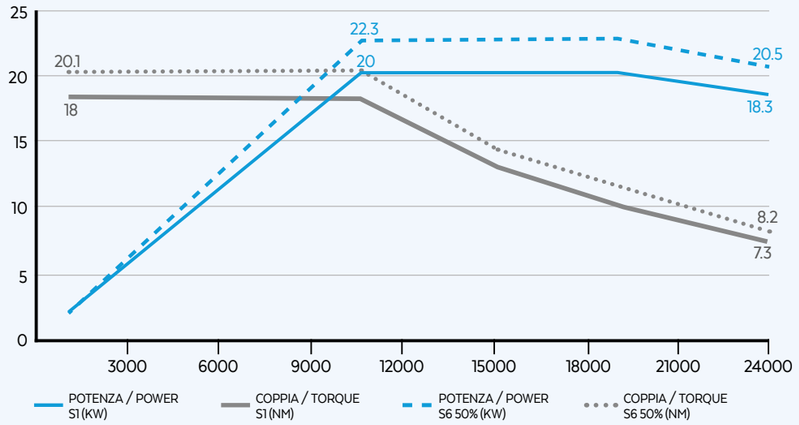

OPZIONALI / OPTIONALS

- Long nose
- Bearings temperature monitoring
- Air tool
- Speed monitoring
- Sensor S5
- Vibration sensor
- Oil mist / MQL
- HSK 63E

SPECIFICHE TECNICHE / TECHNICAL SPECIFICATIONS

- S1-S6 kW 20/22.3
- S1-S6 A 48/50
- Poles 4
- S1-S6 Nm 17.8/20.1
- Volt 380
- Supply inverter
- rpm 24000
- kg 25

EQUIPAGGIAMENTO / EQUIPMENT

- HSK 63A
- Liquid cooling
- Single effect pneumatic cylinder
- Automatic tool changer
- Ceramic ball bearings
- Labyrinth with air seal
- Sensors s1, s2, s3
- Grease lubrication
- Circular male connector
- Taper cleaning
- Encoder 1 Vpp

ROBOTECH HD

SUITABLE FOR PROCESSING ALUMINIUM AND COMPOSITE MATERIALS
EXTREME COMPACTNESS AND POWER DENSITY
OPTIMAL LAYOUT FOR BI-ROTATIONAL HEADS AT 90°
TWO INDEPENDENT CHANNELS FOR PIECE LUBRICATION
ARRANGEMENT FOR AGGREGATES

HD-2 5.6/18 20

PRESTAZIONI / PERFORMANCES

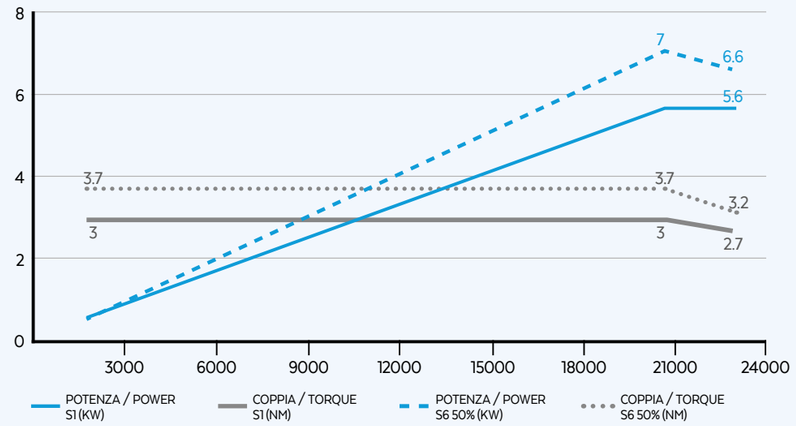

OPZIONALI / OPTIONALS

- Encoder 1 Vpp or TTL
- SENSORS s5 Sensor S5

SPECIFICHE TECNICHE / TECHNICAL SPECIFICATIONS

S1-S6 kW	5.6/7	S1-S6 A	12/14	Poles	4
S1-S6 Nm	3/3.7	Volt	380	Supply	inverter
rpm	20000	kg	18		

EQUIPAGGIAMENTO / EQUIPMENT

- HSK 50F
- Liquid cooling
- Single effect pneumatic cylinder
- Automatic tool changer
- Ceramic ball bearings
- Labyrinth with air seal
- SENSORS s1 s2 s3 Sensors s1, s2, s3
- Grease lubrication
- Taper cleaning

LAYOUT HSK 50F

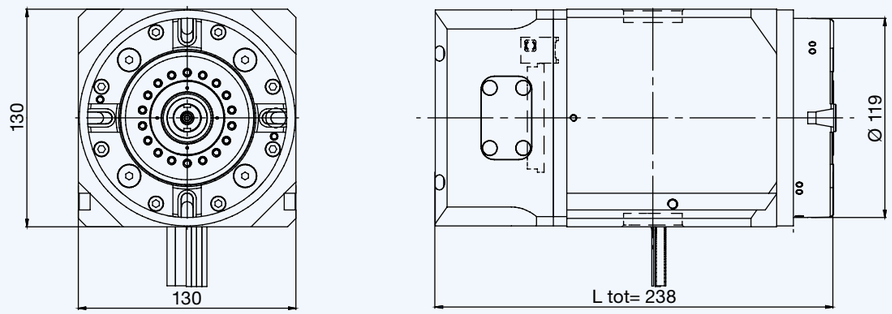

ROBOTECH QT

SUITABLE FOR PROCESSING WOODEN BEAMS
POWER UP TO 25 KW AND HIGH TORQUES
OPTIMAL LAYOUT FOR BI-ROTATIONAL HEADS AT 90° AND 50°

LAYOUT HSK 63E

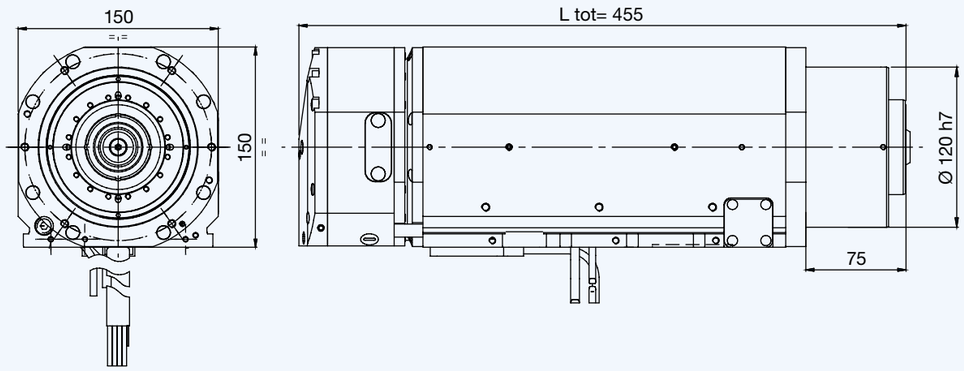

QT-2 13/6 16 — HIGH TORQU

PRESTAZIONI / PERFORMANCES

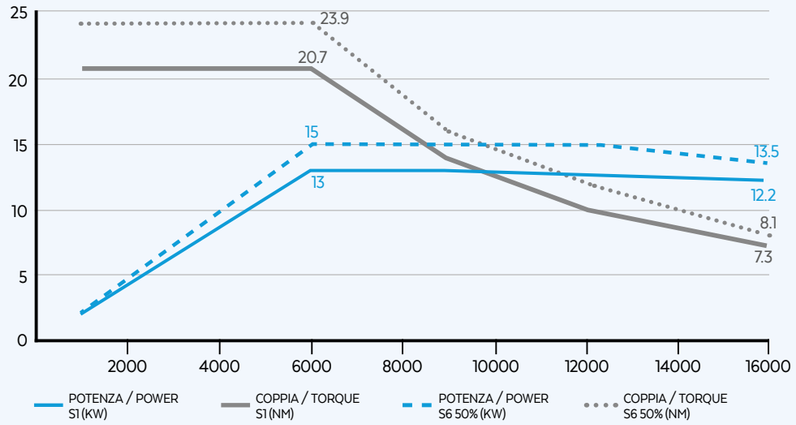

OPZIONALI / OPTIONALS

- Encoder 1 Vpp or TTL

SPECIFICHE TECNICHE / TECHNICAL SPECIFICATIONS

S1-S6 kW	13/15
S1-S6 Nm	20.7/23.9
rpm	16000
S1-S6 A	30/35
Volt	400
kg	36
Poles	4
Supply	inverter

EQUIPAGGIAMENTO / EQUIPMENT

- HSK 63E
- Liquid cooling
- Single effect pneumatic cylinder
- Automatic tool changer
- Ceramic ball bearings
- Labyrinth with air seal
- Sensors (s1 s2 SENSORS s3 s5)
- Grease lubrication
- Taper cleaning

QT-2 25/7 16 (SYNCRONOUS) — HIGH TORQU

PRESTAZIONI / PERFORMANCES

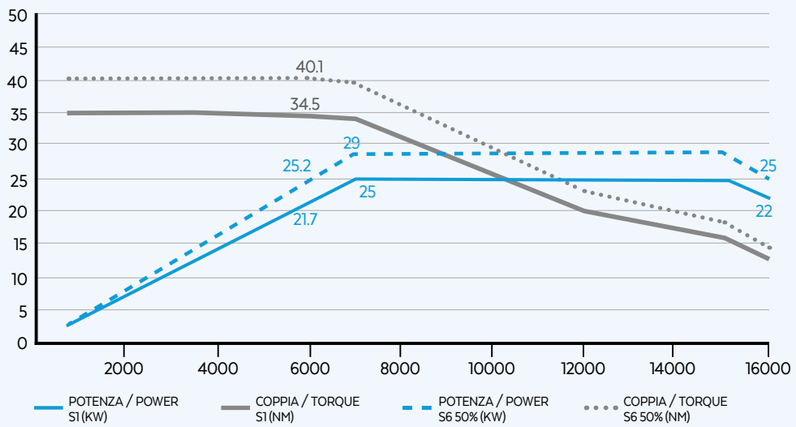

OPZIONALI / OPTIONALS

- Encoder 1 Vpp or TTL

SPECIFICHE TECNICHE / TECHNICAL SPECIFICATIONS

S1-S6 kW	25/29
S1-S6 Nm	34.5/40.1
rpm	16000
S1-S6 A	47/56
Volt	400
kg	36
Poles	4
Supply	inverter

EQUIPAGGIAMENTO / EQUIPMENT

- HSK 63E
- Liquid cooling
- Single effect pneumatic cylinder
- Automatic tool changer
- Ceramic ball bearings
- Labyrinth with air seal
- Sensors (s1 s2 SENSORS s3 s5)
- Grease lubrication
- Taper cleaning

ROBOTECH HT

SUITABLE FOR PROCESSING WOOD AND ALUMINIUM
VERY POWERFUL AND HIGH TORQUES UP TO 25 KW WITH ASYNCHRONOUS TECHNOLOGY
OPTIMISED LAYOUT FOR 3 AND 5 AXES MACHINES
WIDE RANGE OF CONFIGURATIONS WITH ENCODER, 5 BEARINGS,
AIR TOOL, MQL AND OIL MIST

HT-2 25/10 24

PRESTAZIONI / PERFORMANCES

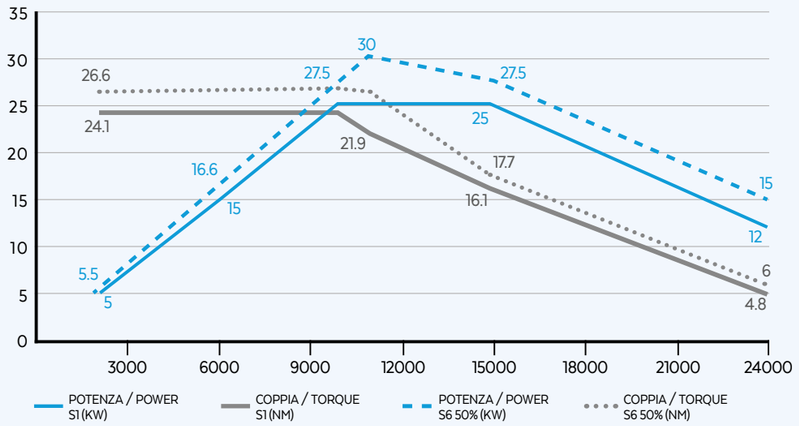

OPZIONALI / OPTIONALS

- Encoder 1 Vpp or TTL
- Bearings temperature monitoring
- Sensor S5
- Air tool
- Oil mist / MQL
- HSK 63A

SPECIFICHE TECNICHE / TECHNICAL SPECIFICATIONS

S1-S6 kW	25/30	S1-S6 A	53/60	Poles	4
S1-S6 Nm	24.2/26.6	Volt	380	Supply	inverter
rpm	24000	kg	42		

EQUIPAGGIAMENTO / EQUIPMENT

- HSK 63E
- Liquid cooling
- Single effect pneumatic cylinder
- Automatic tool changer
- Ceramic ball bearings
- Labyrinth with air seal
- Sensors s1, s2, s3
- Grease lubrication
- Circular male connector
- Taper cleaning

LAYOUT HSK 63E

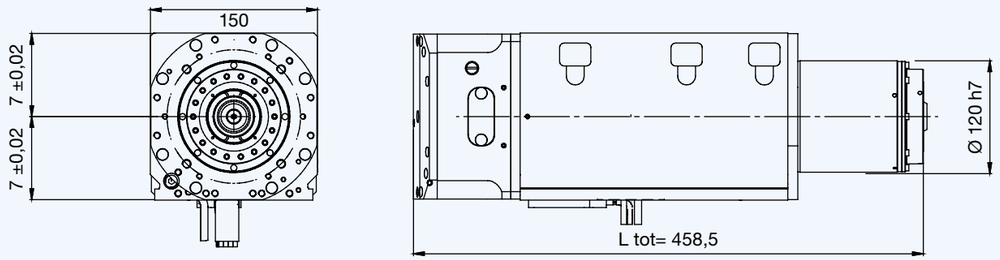

LAYOUT HSK 63E 3C

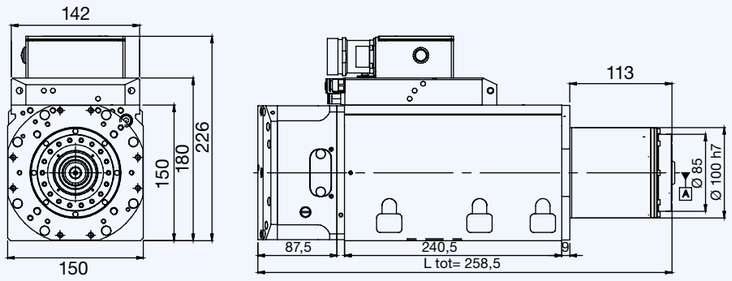

ROBOTECH QM

SUITABLE FOR INTENSE PROCESSING OF WOOD, ALLOYS AND ALUMINIUM
POWER UP TO 30KW AND HIGH TORQUES
VAST RANGE OF CONFIGURATIONS WITH ENCODER, AIR TOOL, MQL AND OIL MISTÌ

LAYOUT HSK 63A

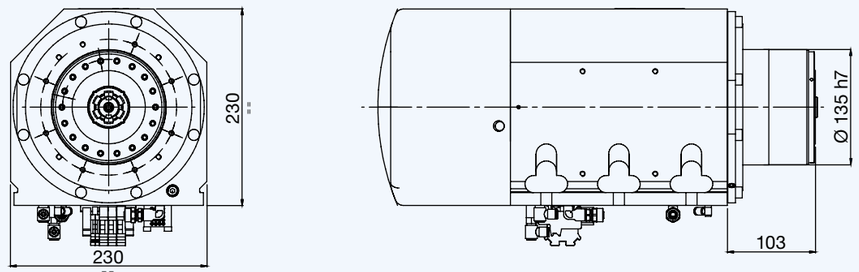

QM-2 30/6 13 — HIGH TORQU

PRESTAZIONI / PERFORMANCES

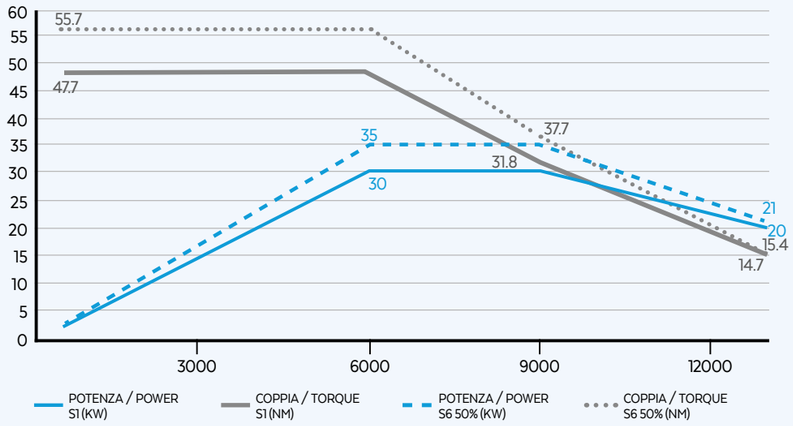

OPZIONALI / OPTIONALS

- Air tool
- Bearings temperature monitoring
- Sensor s5
- Speed monitoring
- Oil mist / MQL
- Vibration sensor
- HSK 80F

SPECIFICHE TECNICHE / TECHNICAL SPECIFICATIONS

S1-S6 kW	30/35	S1-S6 A	59/65	Poles	4
S1-S6 Nm	47.7/55.7	Volt	380	Supply	inverter
rpm	13000	kg	75		

EQUIPAGGIAMENTO / EQUIPMENT

- HSK 63A
- Liquid cooling
- Single effect pneumatic cylinder
- Automatic tool changer
- Ceramic ball bearings
- Labyrinth with air seal
- Sensors s1, s2, s3
- Grease lubrication
- Plug & Play Quick connection PP
- Taper cleaning

CUSTOMTECH KX

SUITABLE FOR PROCESSING METAL, ALLOYS AND ALUMINIUM
HIGH TORQUE DENSITY UP TO 100 NM
COOLING CIRCUIT OF FRONT BEARINGS
AVAILABLE IN AIR TOOL, MQL, OIL MIST AND CTS VERSION

LAYOUT HSK 63A

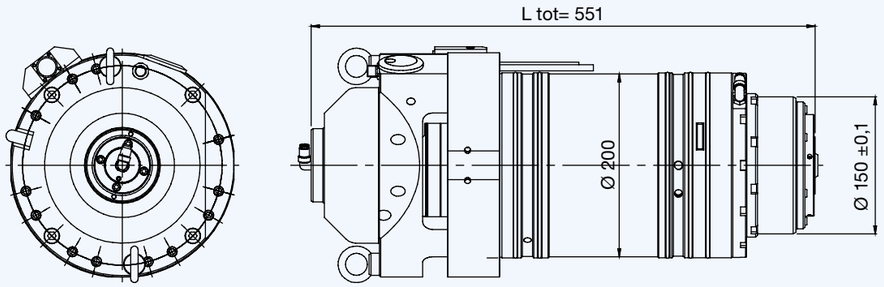

ALTRI LAYOUT / OTHER LAYOUTS

	ΔL	L tot
NL*	+58 mm	

*Solo per versione a 24000 rpm / Only for 24000 rpm option

KX-2 31/4.5 15

PRESTAZIONI / PERFORMANCES

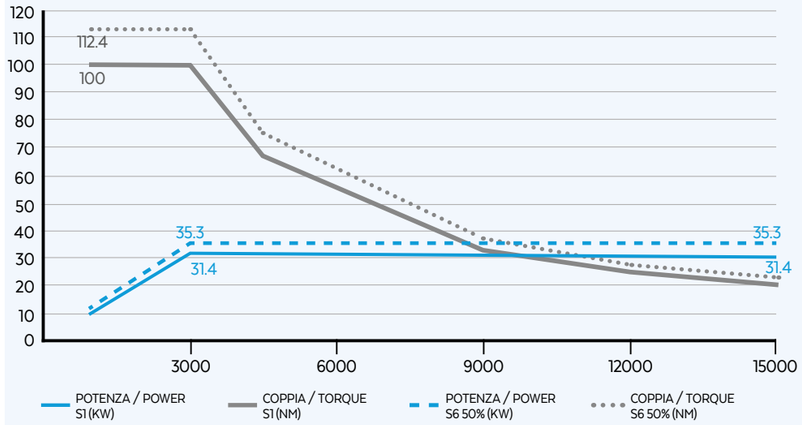

OPZIONALI / OPTIONALS

- Encoder 1 Vpp
- CTS lubrication
- Air tool
- Oil mist / MQL

SPECIFICHE TECNICHE / TECHNICAL SPECIFICATIONS

S1-S6 kW	31/35.3
S1-S6 A	73/113
Poles	4
S1-S6 Nm	68/100
Volt	400
Supply	inverter
rpm	15000
kg	100

EQUIPAGGIAMENTO / EQUIPMENT

- HSK 63A
- Liquid cooling
- Single effect pneumatic cylinder
- Automatic tool changer
- Ceramic ball bearings
- Labyrinth with air seal
- Sensors s1, s2
- Grease lubrication
- Taper cleaning

KX-2 32/4.5 17

PRESTAZIONI / PERFORMANCES

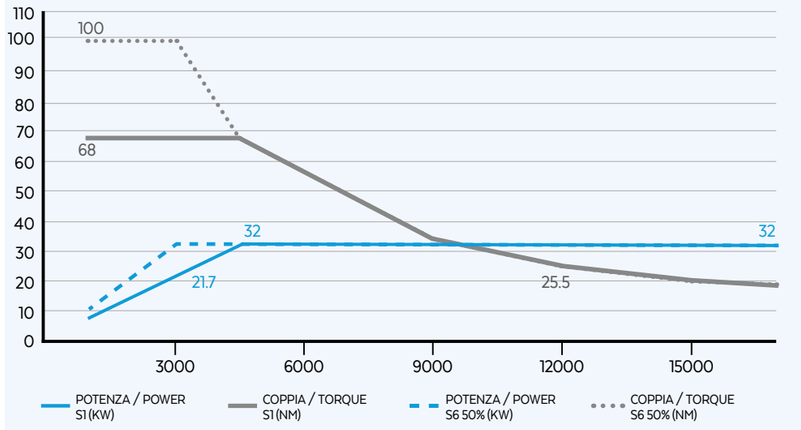

OPZIONALI / OPTIONALS

- Encoder 1 Vpp
- CTS lubrication
- Air tool
- Oil mist / MQL

SPECIFICHE TECNICHE / TECHNICAL SPECIFICATIONS

S1-S6 kW	32/32
S1-S6 A	73/113
Poles	4
S1-S6 Nm	68/100
Volt	400
Supply	inverter
rpm	17000
kg	100

EQUIPAGGIAMENTO / EQUIPMENT

- HSK 63A
- Liquid cooling
- Single effect pneumatic cylinder
- Automatic tool changer
- Ceramic ball bearings
- Labyrinth with air seal
- Sensors s1, s2
- Grease lubrication
- Taper cleaning

KX-2 32/4.5 24

PRESTAZIONI / PERFORMANCES

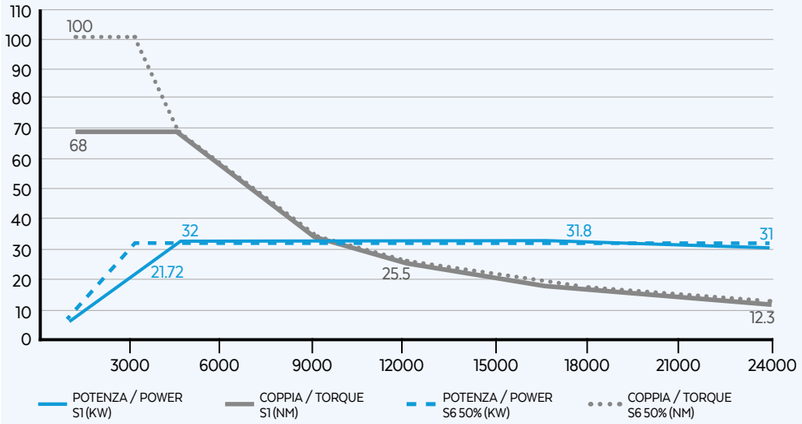

OPZIONALI / OPTIONALS

- Encoder 1 Vpp
- CTS lubrication
- Air tool
- Oil mist / MQL
- Long nose

SPECIFICHE TECNICHE / TECHNICAL SPECIFICATIONS

- S1-S6 kW 32/32
- S1-S6 A 73/113
- Poles 4
- S1-S6 Nm 68/100
- Volt 400
- Supply inverter
- rpm 24000
- kg 100

EQUIPAGGIAMENTO / EQUIPMENT

- HSK 63A
- Liquid cooling
- Single effect pneumatic cylinder
- Automatic tool changer
- Ceramic ball bearings
- Labyrinth with air seal
- Sensors s1, s2
- Grease lubrication
- Taper cleaning

CUSTOMTECH MG

SUITABLE FOR PROCESSING GLASS AND MARBLE
HIGH TORQUE DENSITY
WIDE RANGE OF POWERS UP TO 30 KW
AVAILABLE WITH TOOL AIR BLOW AND CTS

LAYOUT ISO 40

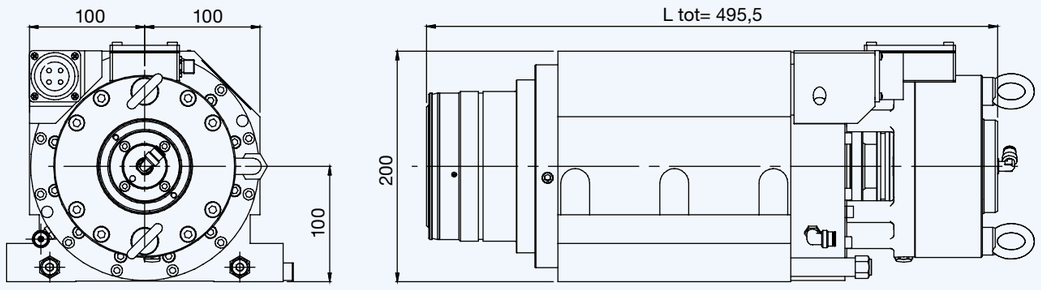

ALTRI LAYOUT / OTHER LAYOUTS

	ΔL	L tot
Encoder (1 Vpp or TTL)	0 mm (Solo 1 VPP)	/

MG-2 9/6 15

PRESTAZIONI / PERFORMANCES

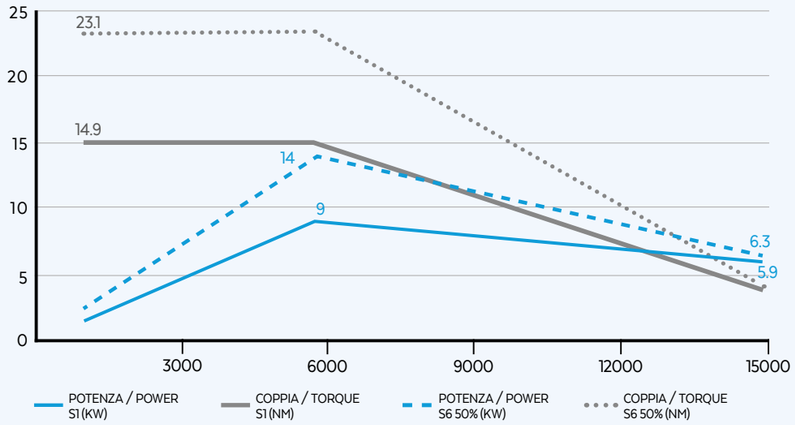

OPZIONALI / OPTIONALS

- CTS lubrication

SPECIFICHE TECNICHE / TECHNICAL SPECIFICATIONS

- S1-S6 kW: 9/14
- S1-S6 A: 24/33
- Poles: 4
- S1-S6 Nm: 14.9/23.1
- Volt: 380
- Supply: inverter
- rpm: 15000
- kg: 90

EQUIPAGGIAMENTO / EQUIPMENT

- ISO 40
- Liquid cooling
- Single effect cylinder
- Automatic tool changer
- Ceramic ball bearings
- Labyrinth with air seal
- Sensors s1, s2
- Grease lubrication
- Taper cleaning

MG-2 13.5/6 15

PRESTAZIONI / PERFORMANCES

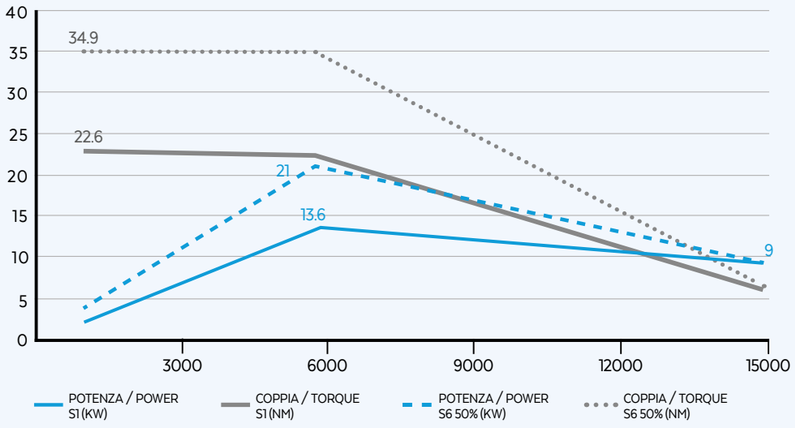

OPZIONALI / OPTIONALS

- CTS lubrication

SPECIFICHE TECNICHE / TECHNICAL SPECIFICATIONS

- S1-S6 kW: 13.6/21
- S1-S6 A: 32/34.9
- Poles: 4
- S1-S6 Nm: 22.6/34.9
- Volt: 380
- Supply: inverter
- rpm: 15000
- kg: 90

EQUIPAGGIAMENTO / EQUIPMENT

- ISO 40
- Liquid cooling
- Single effect cylinder
- Automatic tool changer
- Ceramic ball bearings
- Labyrinth with air seal
- Sensors s1, s2
- Grease lubrication
- Taper cleaning

MG 30/7.5 12

PRESTAZIONI / PERFORMANCES

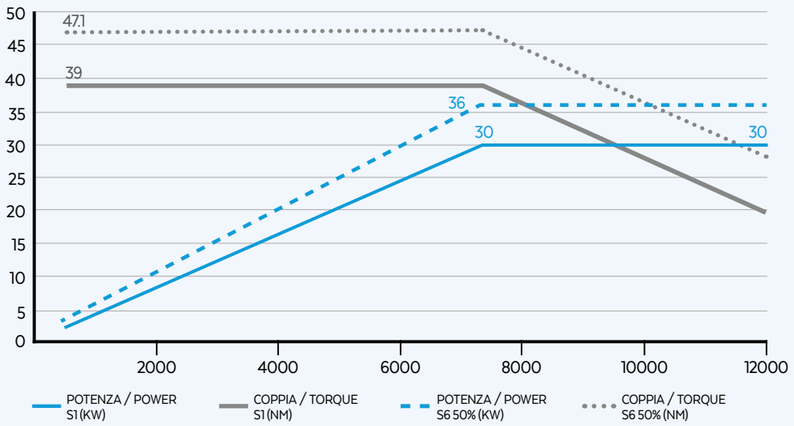

OPZIONALI / OPTIONALS

- CTS lubrication

SPECIFICHE TECNICHE / TECHNICAL SPECIFICATIONS

- S1-S6 kW 30/36
- S1-S6 A 66/78
- Poles 4
- S1-S6 Nm 39/47.1
- Volt 380
- Supply inverter
- rpm 12000
- kg 73

EQUIPAGGIAMENTO / EQUIPMENT

- ISO 40
- Liquid cooling
- Single effect cylinder
- Automatic tool changer
- Ceramic ball bearings
- Labyrinth with air seal
- Sensors s1, s2
- Grease lubrication
- Taper cleaning

MULTITECH MA/ML

SUITABLE FOR WORKING IN DUST ENVIRONMENTS AND FOR LATEST MATERIALS
EASY ASSEMBLING ON 3-AXIS AND 5-AXIS APPLICATIONS
HIGH EFFICIENCY COMPRESSED AIR COOLING
LIQUID-COOLED SPINDLES ARE ALSO AVAILABLE TO BE USED FOR HEAVY AND INTENSIVE PROCESSES

LAYOUT ER32 DX-SX

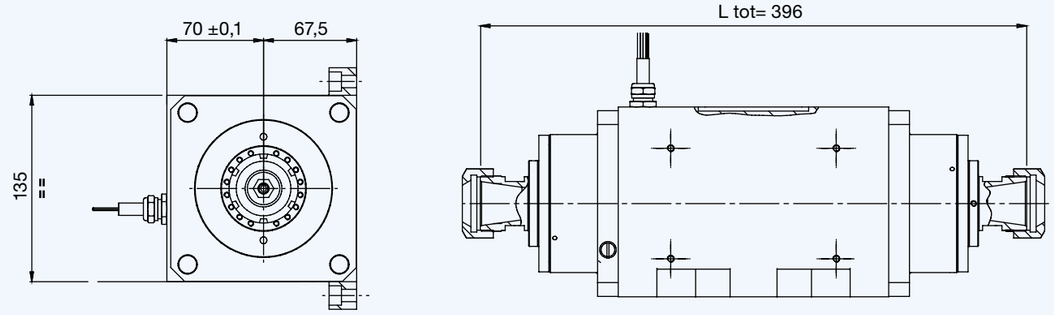

MA-1C 7.5/12 24

PRESTAZIONI / PERFORMANCES

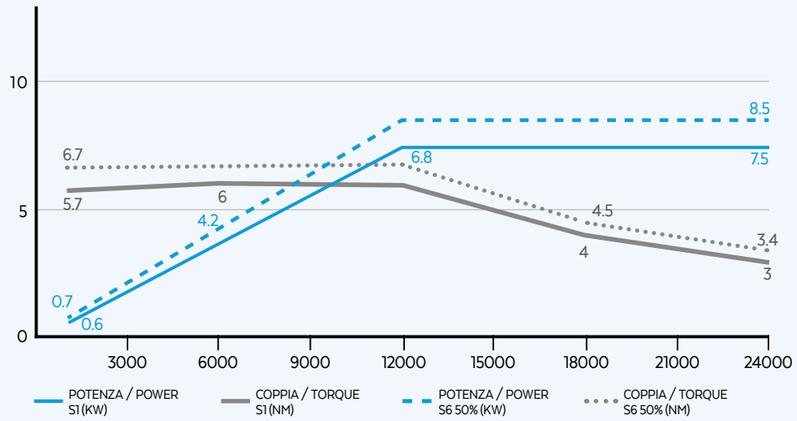

SPECIFICHE TECNICHE / TECHNICAL SPECIFICATIONS

S1-S6 kW	7.5/8.5	S1-S6 A	16/17	Poles	4
S1-S6 Nm	6/6.8	Volt	380	Supply	inverter
rpm	24000	kg	22		

EQUIPAGGIAMENTO / EQUIPMENT

- Ceramic ball bearings
- COMPRESSED AIR Pressed air cooling
- Manual tool changer
- Grease lubrication
- ER 32 DX - ER 32DX/SX
- Labyrinth with air seal

MULTITECH MA/ML

SUITABLE FOR WORKING IN DUST ENVIRONMENTS AND FOR LATEST MATERIALS
EASY ASSEMBLING ON 3-AXIS AND 5-AXIS APPLICATIONS
HIGH EFFICIENCY COMPRESSED AIR COOLING
LIQUID-COOLED SPINDLES ARE ALSO AVAILABLE TO BE USED FOR HEAVY AND INTENSIVE PROCESSES

LAYOUT ER32

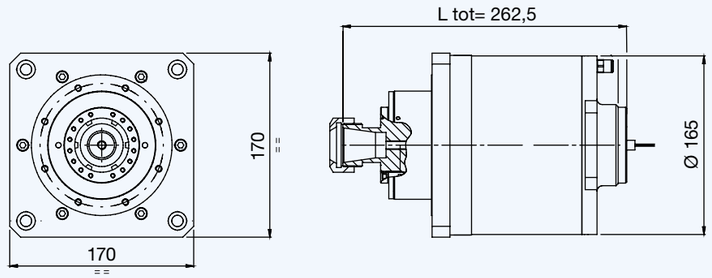

LAYOUT ER 40 DX-SX

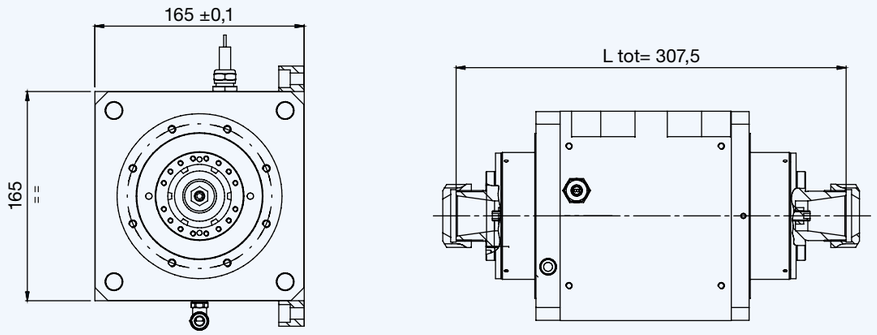

ML-1C 7.5/12 24

PRESTAZIONI / PERFORMANCES

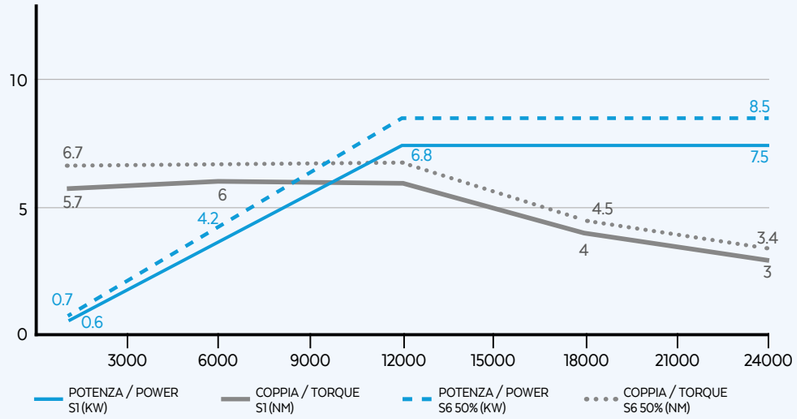

SPECIFICHE TECNICHE / TECHNICAL SPECIFICATIONS

- S1-S6 kW 7.5/8.5
- S1-S6 A 16/17
- Poles 4
- S1-S6 Nm 6/6.8
- Volt 380
- Supply inverter
- rpm 24000
- kg 22

EQUIPAGGIAMENTO / EQUIPMENT

- Ceramic ball bearings
- COM-PRESSED AIR Pressed air cooling
- Manual tool changer
- Grease lubrication
- ER 32 DX - ER 32DX/SX
- Labyrinth with air seal

ML-1C 10/12 24

PRESTAZIONI / PERFORMANCES

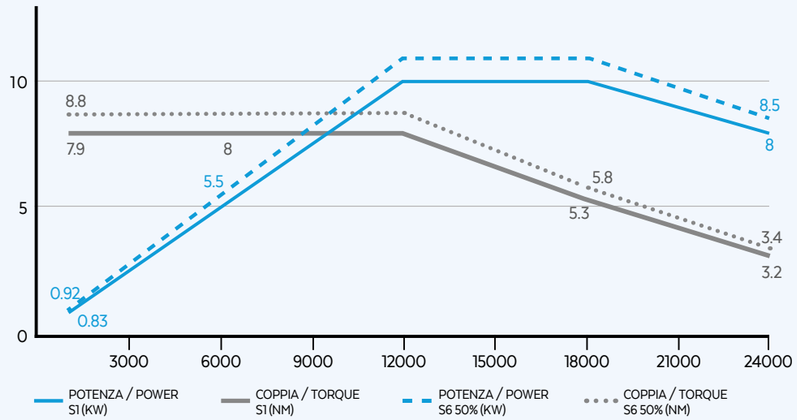

SPECIFICHE TECNICHE / TECHNICAL SPECIFICATIONS

- S1-S6 kW 10/10.5
- S1-S6 A 21.3/22
- Poles 4
- S1-S6 Nm 8/8.8
- Volt 380
- Supply inverter
- rpm 24000
- kg 22

EQUIPAGGIAMENTO / EQUIPMENT

- Ceramic ball bearings
- COM-PRESSED AIR Pressed air cooling
- Manual tool changer
- Grease lubrication
- ER 32 DX - ER 32DX/SX
- Labyrinth with air seal

MULTITECH MA/ML

SUITABLE FOR WORKING IN DUST ENVIRONMENTS AND FOR LATEST MATERIALS
EASY ASSEMBLING ON 3-AXIS AND 5-AXIS APPLICATIONS
HIGH EFFICIENCY COMPRESSED AIR COOLING
LIQUID-COOLED SPINDLES ARE ALSO AVAILABLE TO BE USED FOR HEAVY AND INTENSIVE PROCESSES

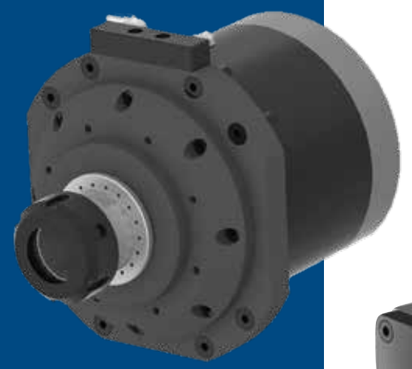

ML-2 9.5/12 24

PRESTAZIONI / PERFORMANCES

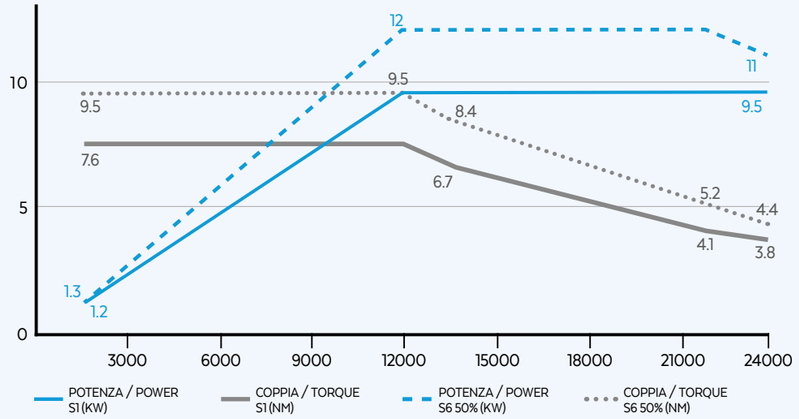

SPECIFICHE TECNICHE / TECHNICAL SPECIFICATIONS

S1-S6 kW	9.5/12	S1-S6 A	22/27
S1-S6 Nm	7.6/9.5	Volt	380
rpm	24000	kg	26
Poles	4	Supply	inverter

EQUIPAGGIAMENTO / EQUIPMENT

- Ceramic ball bearings
- Liquid cooling
- Manual tool changer
- Grease lubrication
- ER 40DX - ER 40DX/SX
- Labyrinth with air seal

LAYOUT ER 40DX

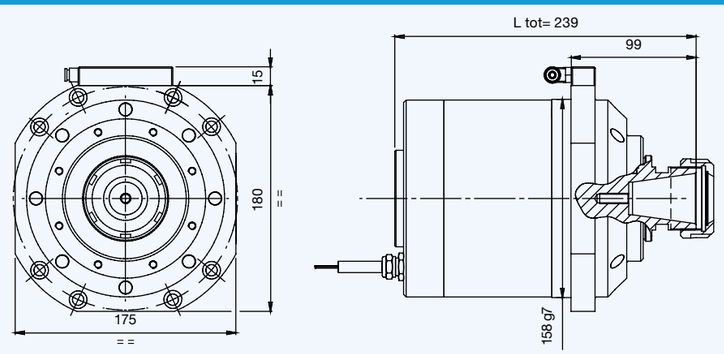

LAYOUT ER 40 DX-SX

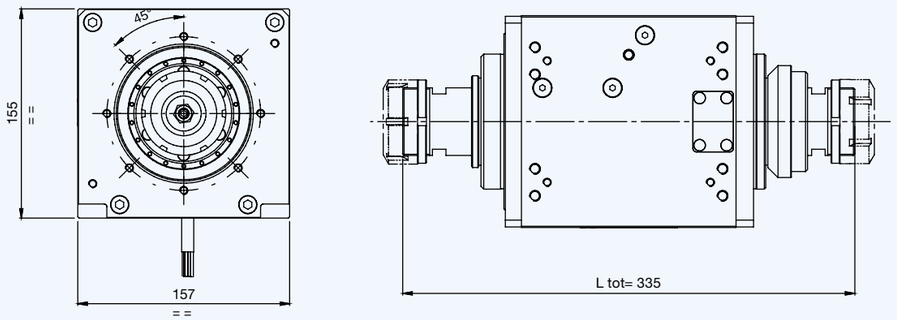

MULTITECH QN

SUITABLE FOR PROCESSING WOOD AND ALUMINIUM
THREE COOLING TYPES: FORCED, SERVO-VENTILATED AND COMPRESSED AIR
VERSION WITH CERAMIC BEARINGS AVAILABLE

LAYOUT ER 32 DX

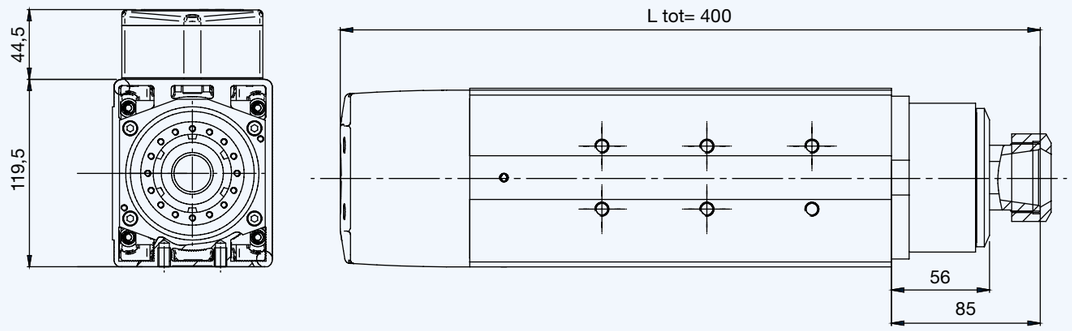

QN-1F 4.5/18 18

PRESTAZIONI / PERFORMANCES

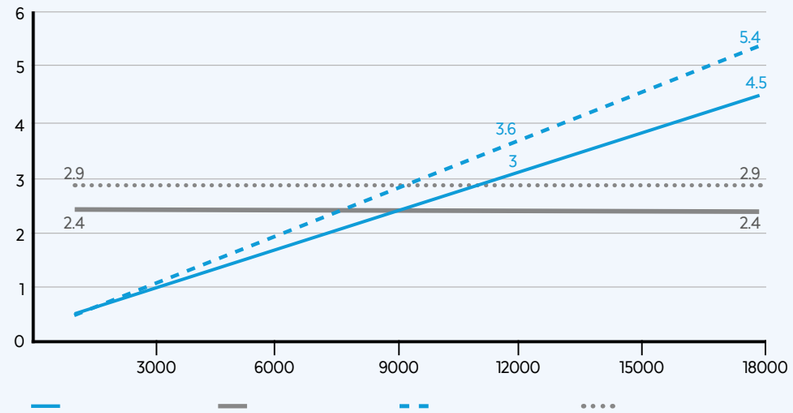

OPZIONALI / OPTIONALS

SPECIFICHE TECNICHE / TECHNICAL SPECIFICATIONS

S1-S6 kW
S1-S6 A
Poles
S1-S6 Nm
Volt
Supply
rpm
kg

EQUIPAGGIAMENTO / EQUIPMENT

M

QN-1F 4.5/18 24

PRESTAZIONI / PERFORMANCES

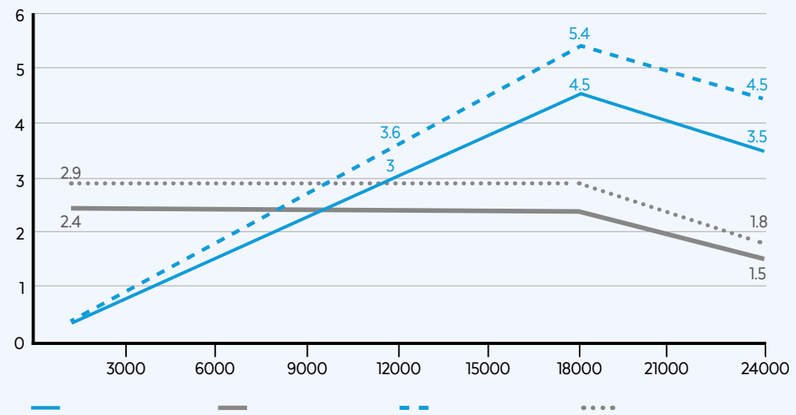

OPZIONALI / OPTIONALS

SPECIFICHE TECNICHE / TECHNICAL SPECIFICATIONS

S1-S6 kW
S1-S6 A
Poles
S1-S6 Nm
Volt
Supply
rpm
kg

EQUIPAGGIAMENTO / EQUIPMENT

M