Ezi-Robo®

Miniaturized Actuator Driven by Ezi-SERVO

- Precision Mono Stage
- High Rigidity
- Compact Structure
- High Accuracy
- High Speed
- Easy to Use

MS

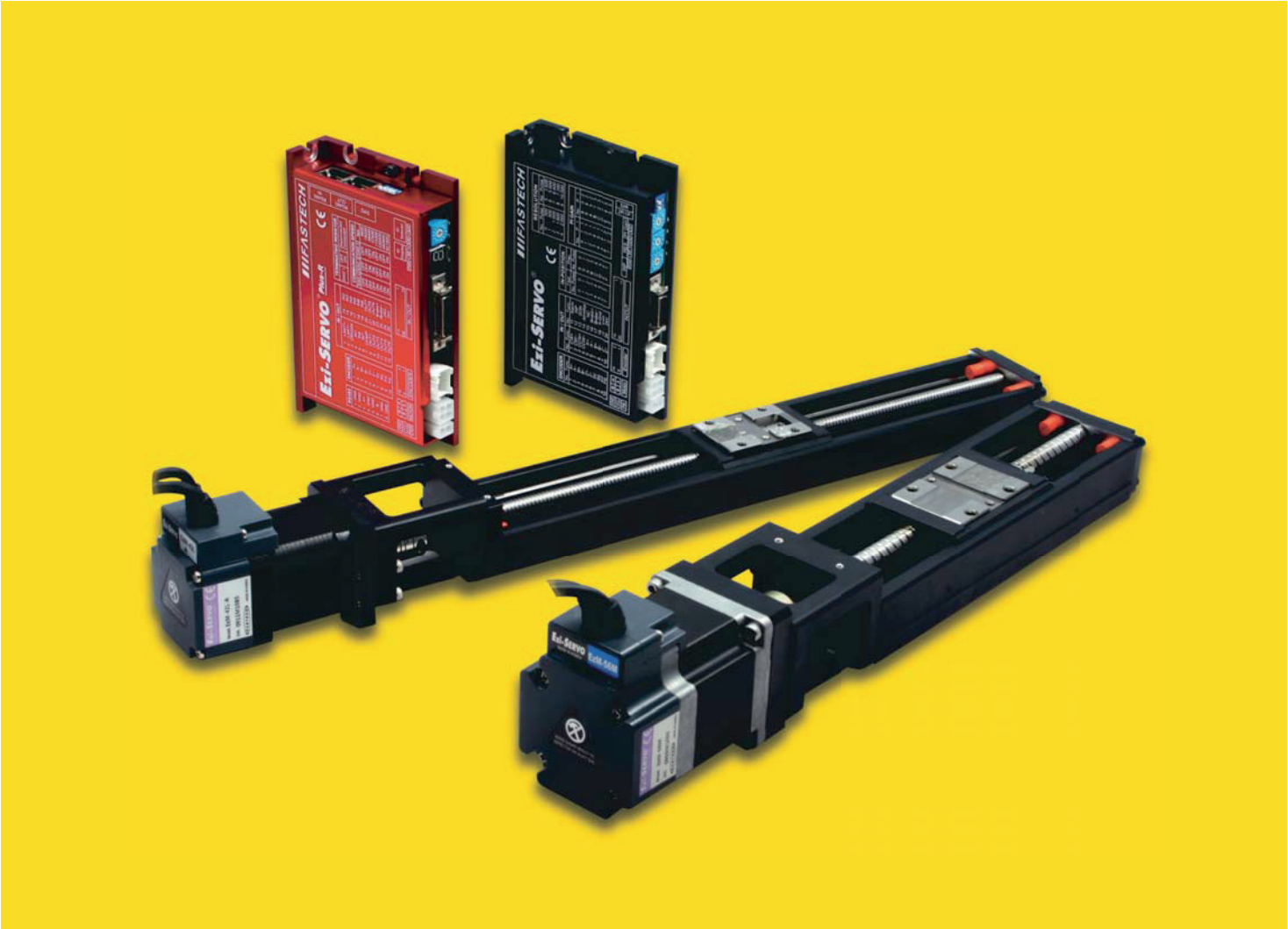

FASTECH

Fast, Accurate, Smooth Motion

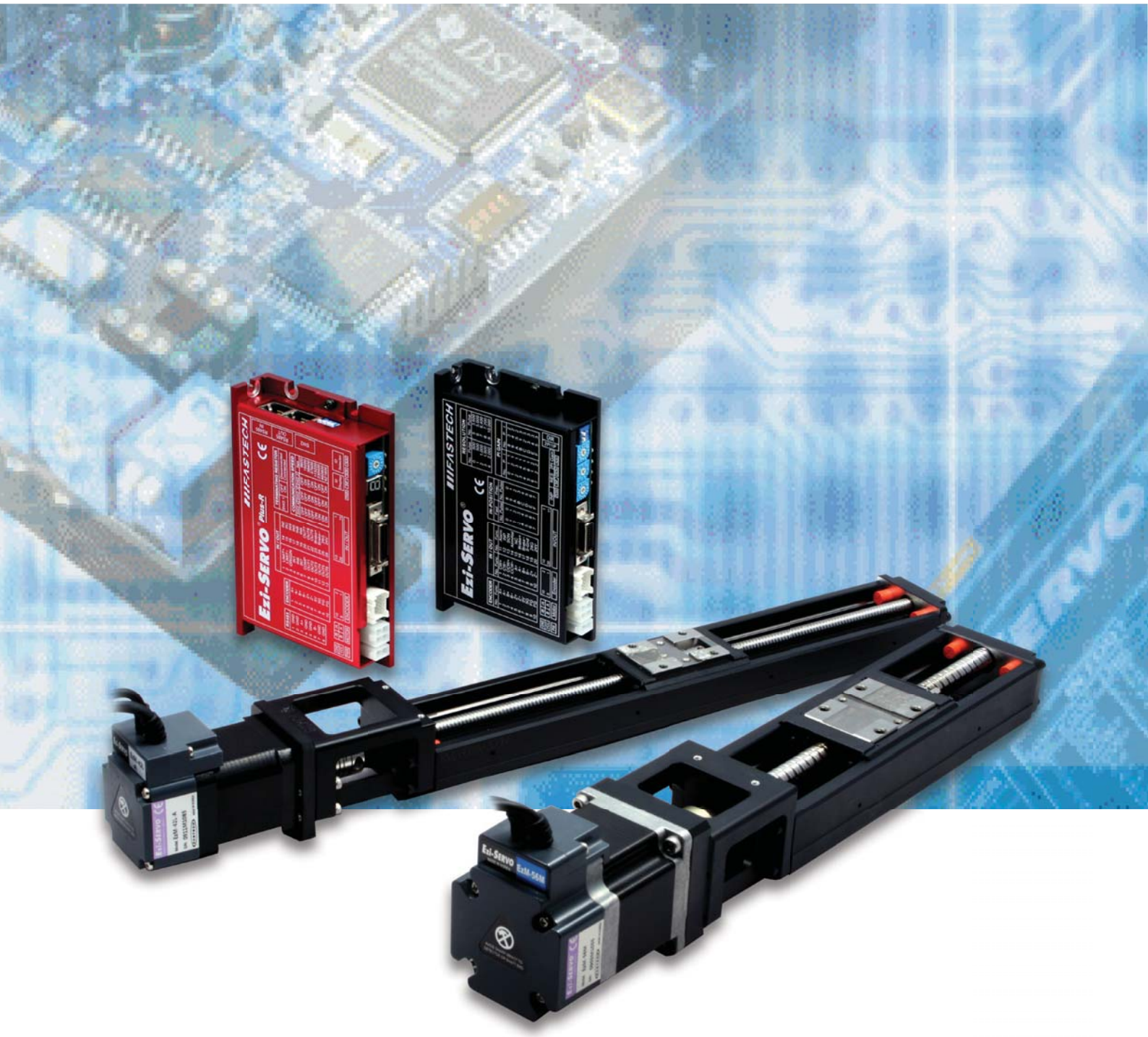

FASTECH

Fast, Accurate, Smooth Motion

Ezi-Robo® MS

Motorized Actuators Driven by Ezi-SERVO

● Characteristic

Ezi-Robo MS Series is a high performance of electric linear actuator combines between PMI' s high rigidity structured of KM-type actuator which is LM Guide and Ball Screw are integrated into U-shaped steel frame and Ezi-SERVO, high-speed and accuracy of closed-loop stepping motor control systemo to maximize the convenience of the user.

1 High Rigidity

This is high rigidity of actuator based on U-shaped rail is designed to maintain the optimal balance between light weight and high strength by the optimal FEM analysis.

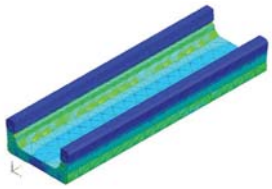

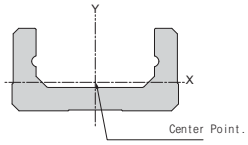

Unit : mm^4

Model Number	I_X	I_Y
MS 26	1.6×10^4	1.5×10^5
MS 30	4.4×10^4	3.3×10^5
MS 33	6.1×10^4	3.8×10^5
MS 45	1.5×10^5	1.1×10^6
MS 46	2.5×10^5	1.6×10^6
MS 55	2.3×10^5	2.3×10^6

* I_X : X-axis rotation cross section secondary moment.
I_Y : Y-axis rotation cross section secondary moment.

2 Compact Structure

It is able to take an advantage for using Maximum space by the design that carriage and ball screw nut of the LM guide are integrated into carriage nut

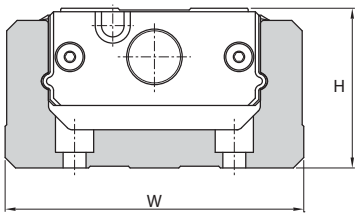

Unit : mm

Model Number	H	W
MS 26	26	50
MS 30	30	60
MS 33	33	60
MS 45	45	80
MS 46	46	86
MS 55	55	100

3 High Precision

It designed to transport and support carriage nut to make Ball of the carriage nut will contact with gothic-arch shaped two lines' groove at 45 degrees so can evenly support load from top and bottom, left and right and can be attached with actuator in any direction, also soft, high-speed operation with high precision against instantaneous load variation by stable manufacturing technology. High precision of position control is available by high resolution of encoder.(resolution up to Max. 32,000 ppr)

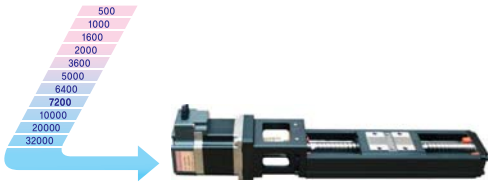

4 Fast Response

High rigidity of actuator fixed to the closed loop stepping control system, Ezi-SERVO can shorten positioning time.

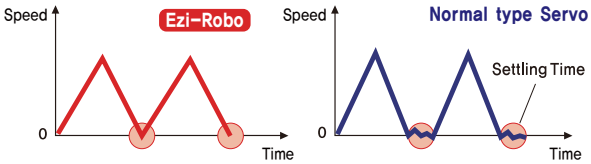

5 Variety of Controller with High Performance and Multi-Tasking

Ezi-SERVO, high performance closed loop stepping control system by adopting pulse train input drives and controller integrated drives are possible to use.

Pulse input drive.

Controller Embedded Drive
(Enable to operate Multi-Axes based on network)

6 Network Based Motion Control

A Maximum of 16 axes can be operated from a PC through RS-485 communication. All of the motion conditions are set through the network and saved in Flash ROM as a parameter. Motion Library (DLL) is provided for programming under Windows 2000/XP.

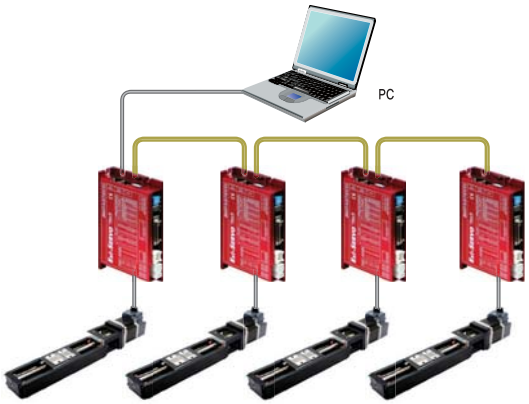

7 Position Table Function

Position Table can be used for motion control by digital input and output signals of host controller. User can operate the motor directly by sending the position table number, start/stop, origin search and other digital input values from a PLC. The PLC can monitor the In-Position, origin search, moving/stop, servo ready and other digital output signals from a drive. A maximum of 256 positioning points can be set from PLC.

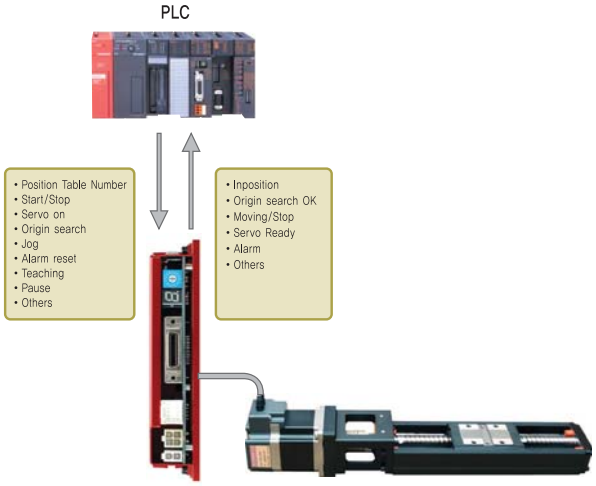

8 High-Speed of Sensorless Origin

Homing Sensorless parts of the bodies ended after detecting contact with the encoder on the Z-based homing function is possible. Therefore regardless of aging deterioration of stopper mounted on the end of mechanism and origin return speed, it always enables reliable high speed and accuracy of origin.

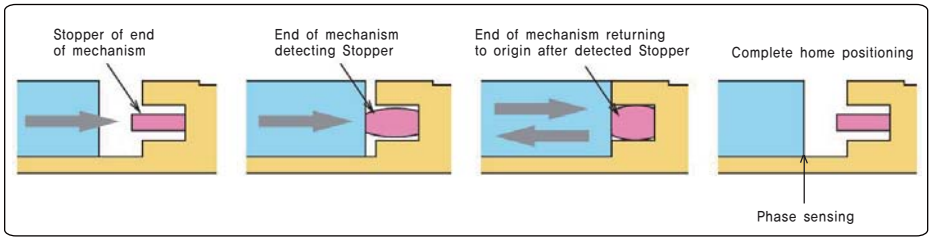

9 Force Control Function

By holding a constant force and leep pressing Rod onto a Work as same as Air Cylinder and pressing power can be set freely by parameter. In other words Fastech Ezi-Robo MS Series offers powerful and convenient force control without an external sensor. Also the position control mode to force control switching, power control can be converted to the position control and position control for the conversion of the control algorithm to minimize changes to the mechanical part of the mount to minimize the impact.

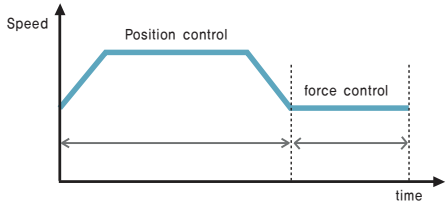

10 Extensive Input/Output Signals and User-Defined Functions

Input 9 points / 9 points signal output according to the needs of users can be defined. Therefore, various functions depending on the needs of the user input/output wiring must be used without changing.

● Ezi-Robo MS Series Part Numbering

MS 26 - 06 - A 400 - P + ST - 56L - B - L + 0 - 0

① ② ③ ④ ⑤ ⑥ ⑦ ⑧ ⑨ ⑩ ⑪ ⑫

①	Series Name	MS : MS (Mono Stage) Series			
②	Name of Part Numbering	26: Height H 26mm	30: Height H 30mm	33: Height H 33mm	
		45: Height H 45mm	46: Height H 46mm	55: Height H 55mm	
③	Ball Screw Lead	05: 5mm, 06: 6mm, 10: 10mm, 20: 20mm			
④	(Carriage-Nut Type)	A : 1 Block, Standard length	B : 2 Block, Standard length		
		C : 1 Short Block, Standard length	D : 2 Short Block, Standard length		
⑤	Rail length	150 : 150mm ~ 1380 : 1380mm			
⑥	Precision Grades	N : Standard Grade	H : Upper grade	P : Precision grade	
⑦	Drive	ST : Pulse train input standard type	MI : Pulse train input mini type		
		PR : Controller embedded standard type	MIPR : Controller embedded mini type		
⑧	Motor size/length	42XL : 42mm /Extra Large	56L : 56mm/Large	86M : 86mm/Middle	
⑨	Electromagnetic Brake	N : No brake	B : Electric Brake is attached		
⑩	Motor cable withdrawal direction	L : Left (standard)	R : Right	U : upside	D : down side
⑪	Cover option	0 : No cover	1 : Cover is attached	2 : Bellows is attached	
⑫	Sensor option	Please see option page in this catalog			

● Carriage-Nut Type

A Type : 1 block : Standard length

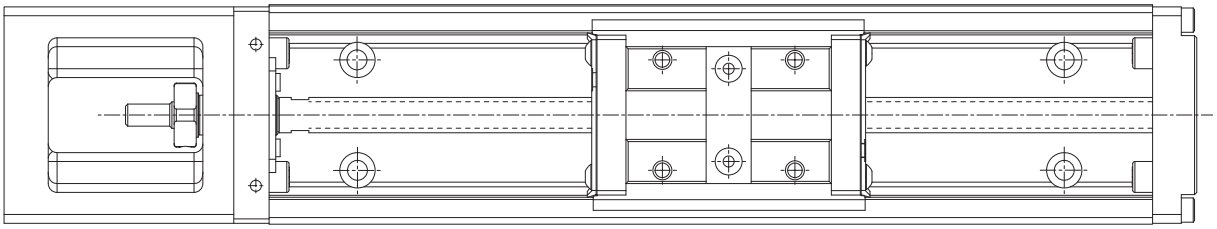

B Type : 2 block : Standard length

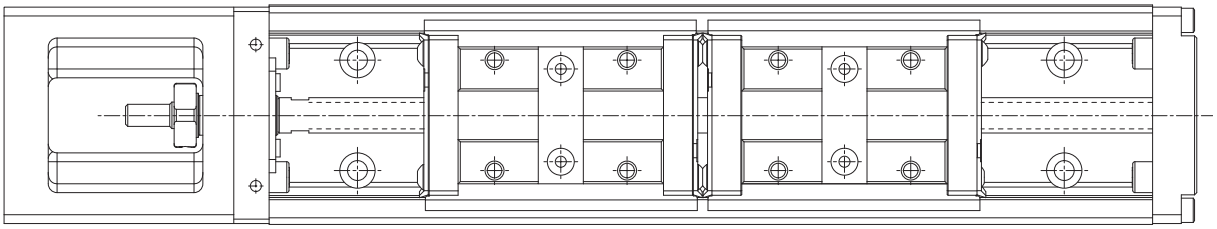

C Type* : 1 Short block : Standard length

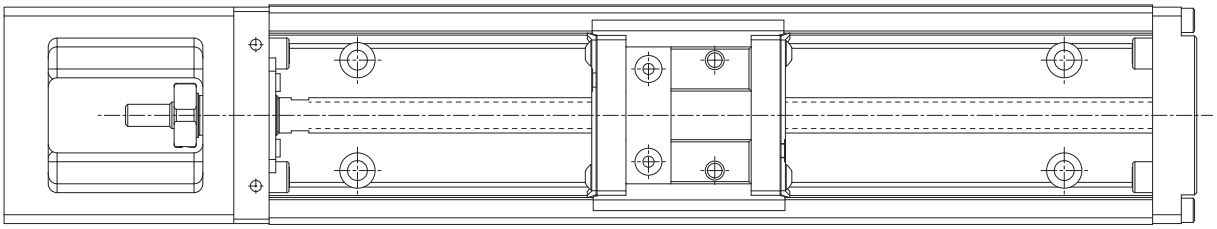

D Type* : 2 Short block : Standard length

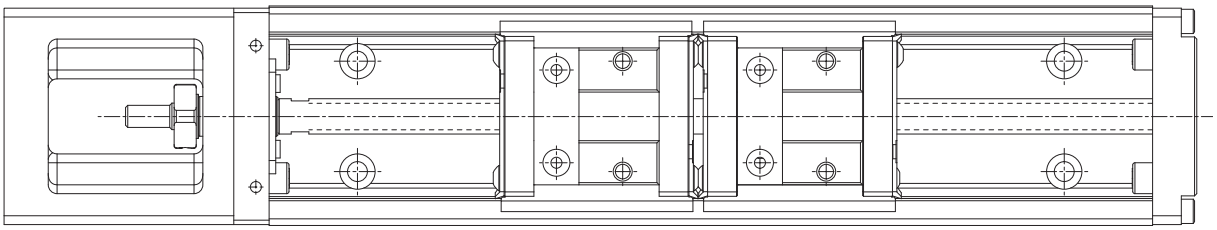

* C, D Type will be supported only with MS30, MS4510, MS4610.

● Motor Cable, Brake Cable Withdrawal Direction

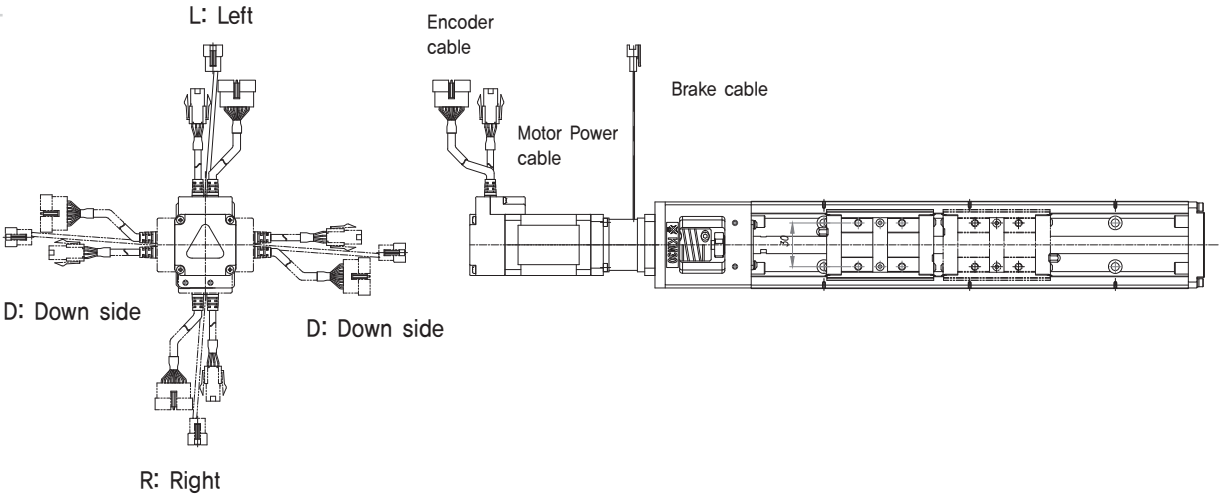

● Load Ratings

Name of Part Numbering		Part of Linear Guide way				Ball Screw Unit							
		Standard dynamic load rating C (kN)		Standard Static load rating Co (kN)		Standard dynamic load rating Ca (kN)		Standard Static load rating Coa (kN)		Shaft diameter (mm)	Lead (mm)	Root diameter (mm)	Ball Center diameter (mm)
		Carriage-Nut Type				Standard N	Precision grade, Upper grade H,P	Standard N	Precision grade, Upper grade H,P				
		A,B	C,D	A,B	C,D								
MS 26	MS 26 02	7,99	–	15,23	–	1,79	2,50	2,94	4,02	8	2	6,6	8,3
	MS 26 06					0,88	1,18	1,18	1,67		6		
MS 30	MS 30 05	12,21	7,91	22,11	11,90	2,25	2,94	4,31	5,10	12	5	10,3	12,4
	MS 30 10					2,16	2,84	3,72	4,51		10	9,9	
MS 33	MS 33 05	12,21	7,91	22,11	11,90	2,25	2,94	4,31	5,10	12	5	10,3	12,4
	MS 33 10					2,16	2,84	3,72	4,51		10	9,9	
MS 45	MS 45 10	26,35	16,26	46,65	23,33	5,00	6,66	8,92	11,86	15	10	12,3	15,6
	MS 45 20		–		–	3,72	5,00	6,37	8,53		20		
MS 46	MS 46 10	26,35	16,26	46,65	23,33	5,00	6,66	8,92	11,86	15	10	12,3	15,6
	MS 46 20		–		–	3,72	5,00	6,37	8,53		20		
MS 55 20		36,73	–	65,29	–	4,61	6,08	9,11	12,15	20	20	17,3	20,6

Unit : N · m

● Static Permissible Moment

Name of Part Numbering		Static Permissuble Moment											
		M_P				M_Y				M_R			
		Carriage-Nut Type				Carriage-Nut Type				Carriage-Nut Type			
		A	B	C	D	A	B	C	D	A	B	C	D
MS 26	MS 26 02	107.3	501.8	–	–	107.3	501.8	–	–	278.6	557.3	–	–
	MS 26 06												
MS 30	MS 30 05	156.6	858.5	43.8	326.4	156.6	858.5	43.8	326.4	462.0	924.0	248.8	497.6
	MS 30 10												
MS 33	MS 33 05	156.6	858.5	43.8	326.4	156.6	858.5	43.8	326.4	462.0	924.0	248.8	497.6
	MS 33 10												
MS 45	MS 45 10	575.0	2678.0	120.0	1245.6	575.0	2678.0	120.0	1245.6	1334.2	2668.5	762.4	1524.8
	MS 45 20			–	–			–	–			–	–
MS 46	MS 46 10	575.0	2678.0	120.0	1245.6	575.0	2678.0	120.0	1245.6	1397.9	2795.8	798.8	1597.6
	MS 46 20			–	–			–	–			–	–
MS 55 20		858.4	4617.2	–	–	858.4	4617.2	–	–	2347.2	4694.4	–	–

* B and D type is figures when 2 blocks connected.

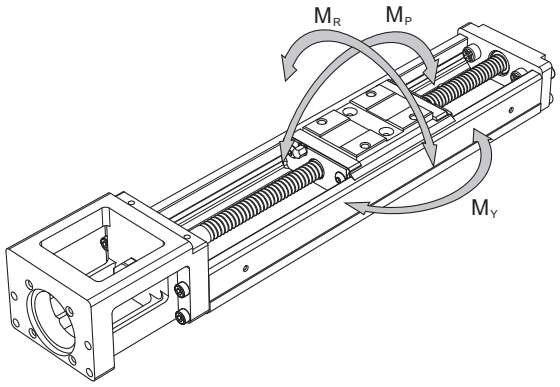

● Accuracy Grade

Name of Part Numbering	Rail Length (mm)	Positioning Repeatability (mm)			Positioning Accuracy (mm)			Running Parallelism (mm)			Backlash (mm)			The Starting Torque (N · m)		
		Standard	Upper grade	Precision grade	Standard	Upper grade	Precision grade	Standard	Upper grade	Precision grade	Standard	Upper grade	Precision grade	Standard	Upper grade	Precision grade
		N	H	P	N	H	P	N	H	P	N	H	P	N	H	P
MS 26	150	±0.01	±0.005	±0.003	–	0.06	0.02	–	0.025	0.01	0.02	0.01	0.003	2	1.5	4
	200															
	250															
	300															
MS 30	150	±0.01	±0.005	±0.003	–	0.06	0.02	–	0.025	0.01	0.02	0.02	0.003	7	7	15
	200															
	300															
	400															
	500					0.1	0.025		0.035	0.015						
	600															
MS 33	150	±0.01	±0.005	±0.003	–	0.06	0.02	–	0.025	0.01	0.02	0.02	0.003	7	7	15
	200															
	300															
	400															
	500					0.1	0.025		0.035	0015						
	600															
MS 45	340	±0.01	±0.005	±0.003	–	0.01	0.025	–	0.035	0.015	0.02	0.02	0.003	10	10	15
	440															
	540															
	640															
	740					0.12	0.03		0.04	0.02						17
	940			–		0.15	–		0.05	–			–			–
MS 46	340	±0.01	±0.005	±0.003	–	0.01	0.025	–	0.035	0.015	0.02	0.02	0.003	10	10	15
	440															
	540															
	640															
	740					0.12	0.03		0.04	0.02						17
	940			–		0.15	–		0.05	–			–			–
MS 55	980	±0.01	±0.005	±0.005	–	0.18	0.035	–	0.05	0.025	0.05	0.05	0.003	12	12	17
	1080															
	1180					0.25	0.04			0.03						20
	1280			–		0.25	–			–			–	15		–
	1380															

● Maximum Travel Speed & Maximum Length

Maximum travel speed on the below table is assumed as the capacity of the motor is large enough, and regardless of DN value, it is limited by the Critical Speed of Ball Screw.

Name of Part Numbering	Ball Screw Lead (mm)	Rail Length (mm)	Maximum Travel Speed (mm/s)			Maximum Length of Manufacturing (mm)		
			Standard	Upper grade	Precision grade	Standard	Upper grade	Precision grade
			N	H	P	N	H	P
MS 26	2	150	280	280	280	300	300	300
		200						
		250						
		300						
	6	150	590	590	830	300	300	300
		200						
		250						
		300						
MS 30	5	150	390	390	550	600	600	600
		200						
		300						
		400						
		500						
		600	340	340	340			
	10	150	790	790	1100	600	600	600
		200						
		300						
		400						
		500			980			
		600	650	650	650			
MS 33	5	150	390	390	550	600	600	600
		200						
		300						
		400						
		500						
		600	340	340	340			
	10	150	790	790	1100	600	600	600
		200						
		300						
		400						
		500			980			
		600	650	650	650			
MS 45	10	340	520	520	740	940	940	740
		440						
		540						
		640						
		740			730			
		940	430	430	–			
	20	340	1050	1050	1480	940	940	740
		440						
		540						
		640						
		740			1440			
		940	840	840	–			
MS 46	10	340	520	520	740	940	940	740
		440						
		540						
		640						
		740			730			
		940	430	430	–			
	20	340	1050	1050	1480	940	940	740
		440						
		540						
		640						
		740			1440			
		940	840	840	–			
MS 55	20	980	800	800	1120	1380	1380	1180
		1080			900			
		1180	740	740	740			
		1280	620	620	–			
		1380	530	530	–			

● Options

Cover

Cover of MS Series can be purchased as an option. Please refer to the page indicated the dimensions of each model to find details of cover dimensions.

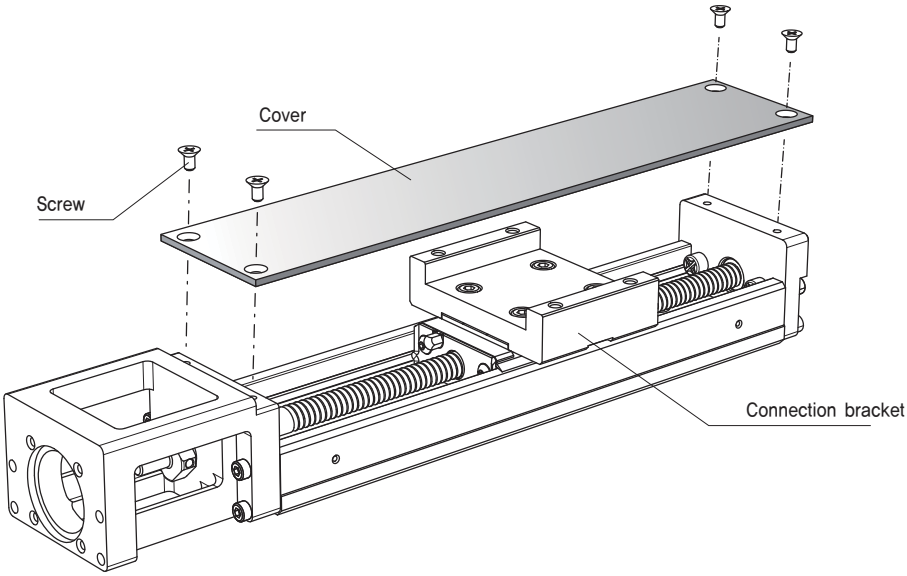

Bellows

This is optional choice so please request Fastech for detail information.

Sensor

MS Series of sensor is optional choice so please refer to below table.

Indicate	Type	Part Numbering	Accessories
0	None	–	–
1	with Sensor rail (3 units)	–	Mounting Screw
2	Photo sensor (3 units)	EE-SX671 (Omron)	Mounting Screw/ Nut, Detecting Plate, Sensor Rail, Mounting Plate, Connector (EE-1001)
3	Photo sensor (3 units)	EE-SX674 (Omron)	Mounting Screw/ Nut, Detecting Plate, Sensor Rail, Mounting Plate, Connector (EE-1001)

Sensor Rail Length

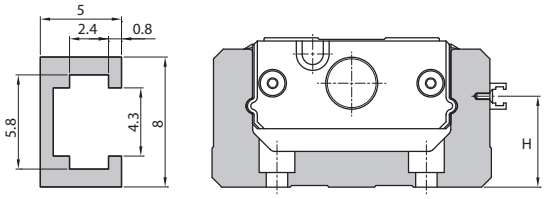

Unit : mm

Name of Part Numbering	H
MS26	12
MS30	14
MS33	15
MS45	19
MS46	28
MS55	27

Sensor Mounting Dimension

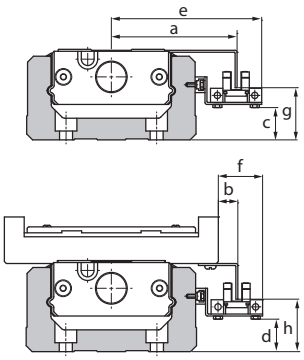

Omron EE-SX671 Unit : mm

Name of Part Numbering	a	b	c	d	e	f	g	h
MS26	46.0	15.0	2.0	2.0	58.5	27.5	10.5	10.5
MS30	50.9	10.9	3.8	3.8	63.4	23.4	11.5	11.5
MS33	50.9	7.9	5.0	5.0	63.4	20.4	13.5	13.5
MS45	60.9	8.7	8.8	8.8	73.4	21.4	17.3	17.3
MS46	63.9	7.9	18.0	18.0	76.4	20.4	26.5	26.5
MS55	70.8	8.8	17.0	17.0	83.3	21.3	25.5	25.5

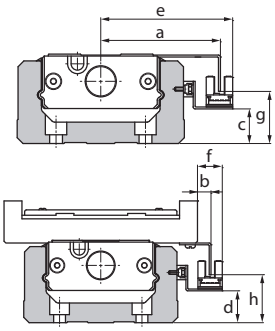

Omron EE-SX674 Unit : mm

Name of Part Numbering	a	b	c	d	e	f	g	h
MS26	43.7	12.7	1.8	1.8	50.0	19.0	10.8	10.8
MS30	48.6	8.6	3.6	3.6	54.9	14.9	11.8	11.8
MS33	48.6	5.6	4.8	4.8	54.9	11.9	13.8	13.8
MS45	58.6	6.6	8.8	8.8	64.9	12.9	17.8	17.8
MS46	61.6	5.6	17.8	17.8	67.9	11.9	26.8	26.8
MS55	68.5	6.5	16.8	16.8	74.8	12.8	25.8	25.8

● Variety of Ezi-Robo MS Series

MS26 Part Numbering

Name of Part Numbering	Lead	Carriage-Nut Type	Rail Length	Accuracy Grades			Drive Type				Standard Motor	Brake	
				Standard	Upper grade	Precision grade	Pulse train input	Controller built	Pulse train input mini	Controller built mini			
MS26	02 (2mm)	A	150	N	H	P	ST	PR	MI	MIPR	EzM-42XL	N	B
			200	N	H	P	ST	PR	MI	MIPR		N	B
			250	N	H	P	ST	PR	MI	MIPR		N	B
			300	N	H	P	ST	PR	MI	MIPR		N	B
		B	150	–	–	–	–	–	–	–	–	–	–
			200	N	H	P	ST	PR	MI	MIPR	EzM-42XL	N	B
			250	N	H	P	ST	PR	MI	MIPR		N	B
			300	N	H	P	ST	PR	MI	MIPR		N	B
	06 (6mm)	A	150	N	H	P	ST	PR	MI	MIPR	EzM-42XL	N	B
			200	N	H	P	ST	PR	MI	MIPR		N	B
			250	N	H	P	ST	PR	MI	MIPR		N	B
			300	N	H	P	ST	PR	MI	MIPR		N	B
		B	150	–	–	–	–	–	–	–	–	–	–
			200	N	H	P	ST	PR	MI	MIPR	EzM-42XL	N	B
			250	N	H	P	ST	PR	MI	MIPR		N	B
			300	N	H	P	ST	PR	MI	MIPR		N	B

* If you want purchase MS26 Unit product that combine with different electric capacity stepper motor other than standard motor EzM-42XL, please contact directly to head office of Fastech.

MS30 Part Numbering

Name of Part Numbering	Lead	Carriage-Nut Type	Rail Length	Accuracy Grades			Drive Type				Standard Motor	Brake	
				Standard	Upper grade	Precision grade	Pulse train input	Controller built	Pulse train input mini	Controller built mini		None	Attachment
MS30	05 (5mm)	A	150	N	H	P	ST	PR	–	–	EzM-42XL	N	B
			200	N	H	P	ST	PR	–	–		N	B
			300	N	H	P	ST	PR	–	–		N	B
			400	N	H	P	ST	PR	–	–		N	B
			500	N	H	P	ST	PR	–	–		N	B
			600	N	H	P	ST	PR	–	–		N	B
		B	150	–	–	–	–	–	–	–	–	–	–
			200	–	–	–	–	–	–	–	–	–	–
			300	N	H	P	ST	PR	–	–	EzM-42XL	N	B
			400	N	H	P	ST	PR	–	–		N	B
			500	N	H	P	ST	PR	–	–		N	B
			600	N	H	P	ST	PR	–	–		N	B
		C	150	N	H	P	ST	PR	–	–	EzM-42XL	N	B
			200	N	H	P	ST	PR	–	–		N	B
			300	N	H	P	ST	PR	–	–		N	B
			400	N	H	P	ST	PR	–	–		N	B
			500	N	H	P	ST	PR	–	–		N	B
			600	N	H	P	ST	PR	–	–		N	B
		D	150	N	H	P	ST	PR	–	–	EzM-42XL	N	B
			200	N	H	P	ST	PR	–	–		N	B
			300	N	H	P	ST	PR	–	–		N	B
			400	N	H	P	ST	PR	–	–		N	B
			500	N	H	P	ST	PR	–	–		N	B
			600	N	H	P	ST	PR	–	–		N	B
	10 (10mm)	A	150	N	H	P	ST	PR	–	–	EzM-42XL	N	B
			200	N	H	P	ST	PR	–	–		N	B
			300	N	H	P	ST	PR	–	–		N	B
			400	N	H	P	ST	PR	–	–		N	B
			500	N	H	P	ST	PR	–	–		N	B
			600	N	H	P	ST	PR	–	–		N	B
		B	150	–	–	–	–	–	–	–	–	–	–
			200	–	–	–	–	–	–	–	–	–	–
			300	N	H	P	ST	PR	–	–	EzM-42XL	N	B
			400	N	H	P	ST	PR	–	–		N	B
			500	N	H	P	ST	PR	–	–		N	B
			600	N	H	P	ST	PR	–	–		N	B
		C	150	N	H	P	ST	PR	–	–	EzM-42XL	N	B
			200	N	H	P	ST	PR	–	–		N	B
			300	N	H	P	ST	PR	–	–		N	B
			400	N	H	P	ST	PR	–	–		N	B
			500	N	H	P	ST	PR	–	–		N	B
			600	N	H	P	ST	PR	–	–		N	B
		D	150	N	H	P	ST	PR	–	–	EzM-42XL	N	B
			200	N	H	P	ST	PR	–	–		N	B
			300	N	H	P	ST	PR	–	–		N	B
			400	N	H	P	ST	PR	–	–		N	B
			500	N	H	P	ST	PR	–	–		N	B
			600	N	H	P	ST	PR	–	–		N	B

* If you want purchase MS30 Unit product that combine with different electric capacity stepper motor other than standard motor EzM-42XL, please contact directly to head office of Fastech

MS33 Part Numbering

Name of Part Numbering	Lead	Carriage-Nut Type	Rail Length	Accuracy Grades			Drive Type				Standard Motor	Brake	
				Standard	Upper grade	Precision grade	Pulse train input	Controller built	Pulse train input mini	Controller built mini		None	Attachment
MS33	05 (5mm)	A	150	N	H	P	ST	PR	–	–	EzM-56L	N	B
			200	N	H	P	ST	PR	–	–		N	B
			300	N	H	P	ST	PR	–	–		N	B
			400	N	H	P	ST	PR	–	–		N	B
			500	N	H	P	ST	PR	–	–		N	B
			600	N	H	P	ST	PR	–	–		N	B
		B	150	–	–	–	–	–	–	–	–	–	–
			200	–	–	–	–	–	–	–	–	–	–
			300	N	H	P	ST	PR	–	–	EzM-56L	N	B
			400	N	H	P	ST	PR	–	–		N	B
			500	N	H	P	ST	PR	–	–		N	B
			600	N	H	P	ST	PR	–	–		N	B
		C	150	N	H	P	ST	PR	–	–	EzM-56L	N	B
			200	N	H	P	ST	PR	–	–		N	B
			300	N	H	P	ST	PR	–	–		N	B
			400	N	H	P	ST	PR	–	–		N	B
			500	N	H	P	ST	PR	–	–		N	B
			600	N	H	P	ST	PR	–	–		N	B
		D	150	N	H	P	ST	PR	–	–	EzM-56L	N	B
			200	N	H	P	ST	PR	–	–		N	B
			300	N	H	P	ST	PR	–	–		N	B
			400	N	H	P	ST	PR	–	–		N	B
			500	N	H	P	ST	PR	–	–		N	B
			600	N	H	P	ST	PR	–	–		N	B
	10 (10mm)	A	150	N	H	P	ST	PR	–	–	EzM-56L	–	–
			200	N	H	P	ST	PR	–	–		–	–
			300	N	H	P	ST	PR	–	–		N	B
			400	N	H	P	ST	PR	–	–		N	B
			500	N	H	P	ST	PR	–	–		N	B
			600	N	H	P	ST	PR	–	–		N	B
		B	150	–	–	–	–	–	–	–	–	–	–
			200	–	–	–	–	–	–	–	–	–	–
			300	N	H	P	ST	PR	–	–	EzM-56L	N	B
			400	N	H	P	ST	PR	–	–		N	B
			500	N	H	P	ST	PR	–	–		N	B
			600	N	H	P	ST	PR	–	–		N	B
		C	150	N	H	P	ST	PR	–	–	EzM-42XL	N	B
			200	N	H	P	ST	PR	–	–		N	B
			300	N	H	P	ST	PR	–	–		N	B
			400	N	H	P	ST	PR	–	–		N	B
			500	N	H	P	ST	PR	–	–		N	B
			600	N	H	P	ST	PR	–	–		N	B
		D	150	N	H	P	ST	PR	–	–	EzM-42XL	N	B
			200	N	H	P	ST	PR	–	–		N	B
			300	N	H	P	ST	PR	–	–		N	B
			400	N	H	P	ST	PR	–	–		N	B
			500	N	H	P	ST	PR	–	–		N	B
			600	N	H	P	ST	PR	–	–		N	B

* If you want purchase MS33 Unit product that combine with different electric capacity stepper motor other than standard motor EzM-56L please contact directly to head office of Fastech.

MS45 Part Numbering

Name of Part Numbering	Lead	Carriage-Nut Type	Rail Length	Accuracy Grades			Drive Type				Standard Motor	Brake	
				Standard	Upper grade	Precision grade	Pulse train input	Controller built	Pulse train input mini	Controller built mini		None	Attachment
MS45	10 (10mm)	A	340	N	H	P	ST	PR	–	–	EzM-60L	N	B
			440	N	H	P	ST	PR	–	–		N	B
			540	N	H	P	ST	PR	–	–		N	B
			640	N	H	P	ST	PR	–	–		N	B
			740	N	H	P	ST	PR	–	–		N	B
			940	N	H	–	ST	PR	–	–		N	B
		B	340	N	H	P	ST	PR	–	–	EzM-60L	N	B
			440	N	H	P	ST	PR	–	–		N	B
			540	N	H	P	ST	PR	–	–		N	B
			640	N	H	P	ST	PR	–	–		N	B
			740	N	H	P	ST	PR	–	–		N	B
			940	N	H	–	ST	PR	–	–		N	B
		C	340	N	H	P	ST	PR	–	–	EzM-60L	N	B
			440	N	H	P	ST	PR	–	–		N	B
			540	N	H	P	ST	PR	–	–		N	B
			640	N	H	P	ST	PR	–	–		N	B
			740	N	H	P	ST	PR	–	–		N	B
			940	N	H	–	ST	PR	–	–		N	B
		D	340	N	H	P	ST	PR	–	–	EzM-60L	N	B
			440	N	H	P	ST	PR	–	–		N	B
			540	N	H	P	ST	PR	–	–		N	B
			640	N	H	P	ST	PR	–	–		N	B
			740	N	H	P	ST	PR	–	–		N	B
			940	N	H	–	ST	PR	–	–		N	B
	20 (20mm)	A	340	N	H	P	ST	PR	–	–	EzM-60L	N	B
			440	N	H	P	ST	PR	–	–		N	B
			540	N	H	P	ST	PR	–	–		N	B
			640	N	H	P	ST	PR	–	–		N	B
			740	N	H	P	ST	PR	–	–		N	B
			940	N	H	–	ST	PR	–	–		N	B
		B	340	N	H	P	ST	PR	–	–	EzM-60L	N	B
			440	N	H	P	ST	PR	–	–		N	B
			540	N	H	P	ST	PR	–	–		N	B
			640	N	H	P	ST	PR	–	–		N	B
			740	N	H	P	ST	PR	–	–		N	B
			940	N	H	–	ST	PR	–	–		N	B

* If you want purchase MS45 Unit product that combine with different electric capacity stepper motor other than standard motor EzM-60L, please contact directly to head office of Fastech.

MS46 Part Numbering

Name of Part Numbering	Lead	Carriage-Nut Type	Rail Length	Accuracy Grades			Drive Type				Standard Motor	Brake	
				Standard	Upper grade	Precision grade	Pulse train input	Controller built	Pulse train input mini	Controller built mini		None	Attachment
MS46	10 (10mm)	A	340	N	H	P	ST	PR	–	–	EzM-86M	N	B
			440	N	H	P	ST	PR	–	–		N	B
			540	N	H	P	ST	PR	–	–		N	B
			640	N	H	P	ST	PR	–	–		N	B
			740	N	H	P	ST	PR	–	–		N	B
			940	N	H	–	ST	PR	–	–		N	B
		B	340	N	H	P	ST	PR	–	–	EzM-86M	N	B
			440	N	H	P	ST	PR	–	–		N	B
			540	N	H	P	ST	PR	–	–		N	B
			640	N	H	P	ST	PR	–	–		N	B
			740	N	H	P	ST	PR	–	–		N	B
			940	N	H	–	ST	PR	–	–		N	B
		C	340	N	H	P	ST	PR	–	–	EzM-86M	N	B
			440	N	H	P	ST	PR	–	–		N	B
			540	N	H	P	ST	PR	–	–		N	B
			640	N	H	P	ST	PR	–	–		N	B
			740	N	H	P	ST	PR	–	–		N	B
			940	N	H	–	ST	PR	–	–		N	B
		D	340	N	H	P	ST	PR	–	–	EzM-86M	N	B
			440	N	H	P	ST	PR	–	–		N	B
			540	N	H	P	ST	PR	–	–		N	B
			640	N	H	P	ST	PR	–	–		N	B
			740	N	H	P	ST	PR	–	–		N	B
			940	N	H	–	ST	PR	–	–		N	B
	20 (20mm)	A	340	N	H	P	ST	PR	–	–	EzM-86M	N	B
			440	N	H	P	ST	PR	–	–		N	B
			540	N	H	P	ST	PR	–	–		N	B
			640	N	H	P	ST	PR	–	–		N	B
			740	N	H	P	ST	PR	–	–		N	B
			940	N	H	–	ST	PR	–	–		N	B
		B	340	N	H	P	ST	PR	–	–	EzM-86M	N	B
			440	N	H	P	ST	PR	–	–		N	B
			540	N	H	P	ST	PR	–	–		N	B
			640	N	H	P	ST	PR	–	–		N	B
			740	N	H	P	ST	PR	–	–		N	B
			940	N	H	–	ST	PR	–	–		N	B

* If you want purchase MS46 Unit product that combine with different electric capacity stepper motor other than standard motor EzM-86M, please contact directly to head office of Fastech.

MS55 Part Numbering

Name of Part Numbering	Lead	Carriage-Nut Type	Rail Length	Accuracy Grades			Drive Type				Standard Motor	Brake	
				Standard	Upper grade	Precision grade	Pulse train input	Controller built	Pulse train input mini	Controller built mini		None	Attachment
MS55	20 (20mm)	A	980	N	H	P	ST	PR	–	–	EzM-86L	N	B
			1080	N	H	P	ST	PR	–	–		N	B
			1180	N	H	P	ST	PR	–	–		N	B
			1280	N	H	–	ST	PR	–	–		N	B
			1380	N	H	–	ST	PR	–	–		N	B
		B	980	N	H	P	ST	PR	–	–	EzM-86L	N	B
			1080	N	H	P	ST	PR	–	–		N	B
			1180	N	H	P	ST	PR	–	–		N	B
			1280	N	H	–	ST	PR	–	–		N	B
			1380	N	H	–	ST	PR	–	–		N	B

* If you want purchase MS55 Unit product that combine with different electric capacity stepper motor other than standard motor EzM-86L, please contact directly to head office of Fastech.

● Outline and Dimension of Ezi-Robo MS Series

MS26 Standard Type

A : 1 block: Standard length
B : 2 block: Standard length

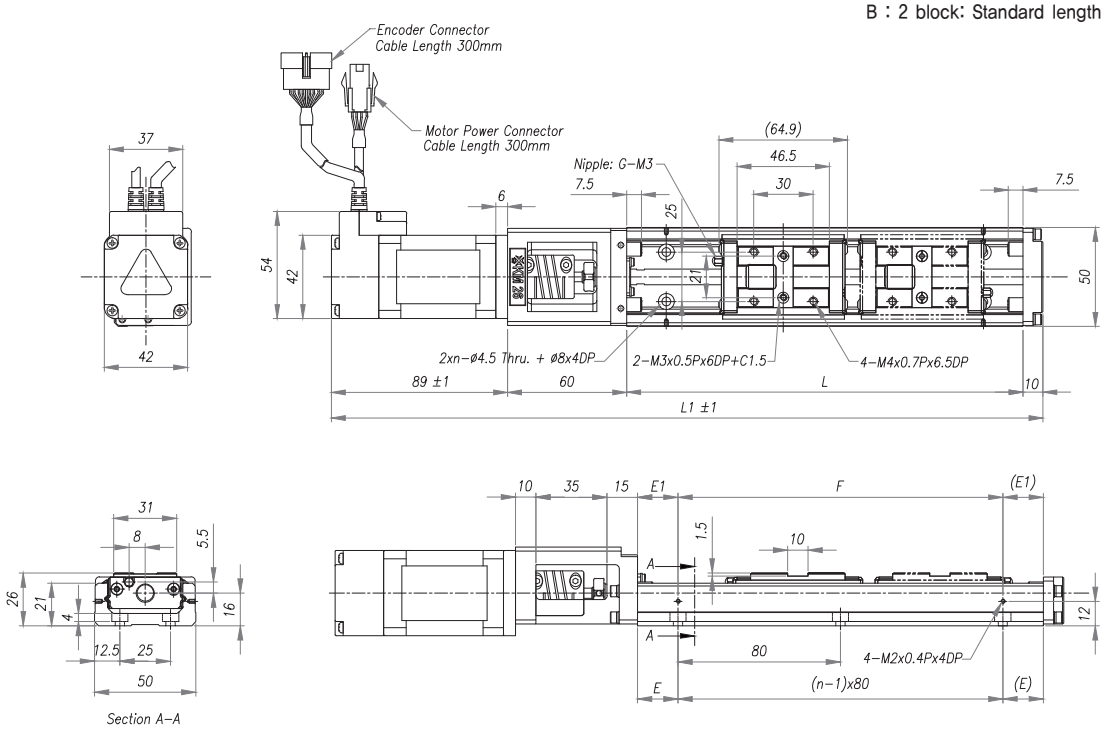

MS26 Cover Type

A : 1 block: Standard length
B : 2 block: Standard length

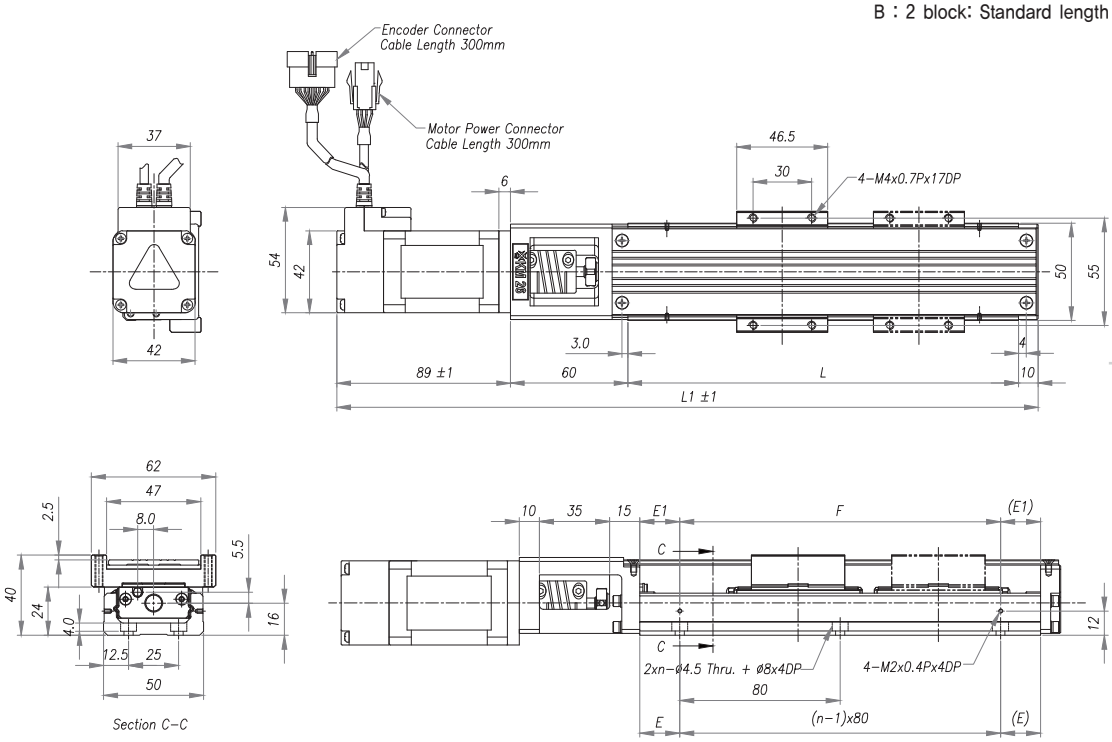

MS26 Standard Type + Brake

A : 1 block: Standard length
B : 2 block: Standard length

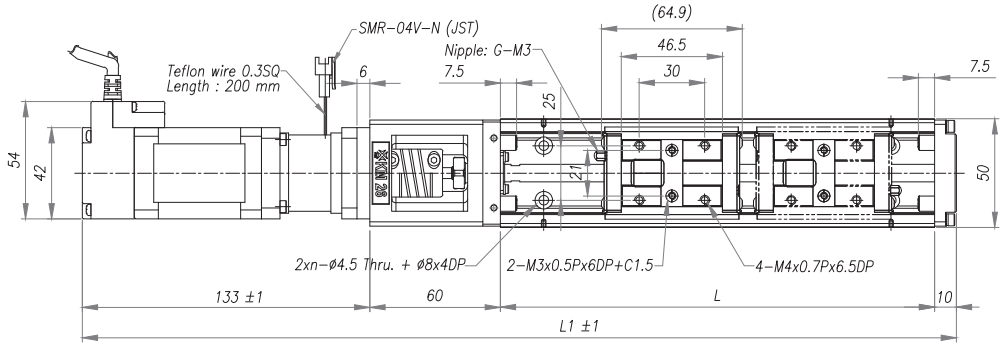

MS26 Cover Type + Brake

A : 1 block: Standard length
B : 2 block: Standard length

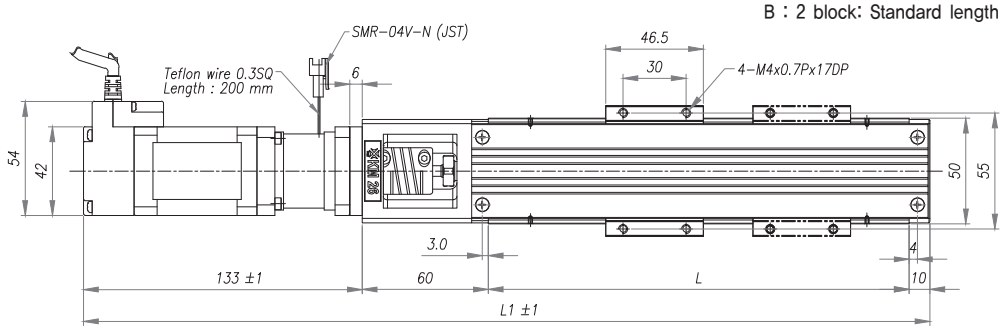

Main Specifications of MS26 Series. (Carriage – Nut A,B Type)							
Motor Type				EzM-42XL			
Rail length L (mm)				150	200	250	300
Maximum Stroke (mm)			A Type	70	120	170	220
			B Type Note1)	–	55	105	155
Main Dimension (mm)	Standard		L1	309	359	409	459
	Cover			309	359	409	459
	Standard + Brake			353	403	453	503
	Cover + Brake			353	403	453	503
	Common		F	80	160	160	240
			E	35	20	45	30
			E1	35	20	45	30
Number of Actuator Mounting Holes			n	2	3	3	4
Number of Sensor Mounting Holes			n1	2	2	2	2
Maximum Travel Speed Note2) (mm/sec)			Lead 2mm	100			
			Lead 6mm	300			
Electromagnetic Brake Sustainability (N)			Lead 2mm	560			
			Lead 6mm	185			
Unit Weight (Kg)	No Brake	Standard	A Type	1.6	1.8	2.0	2.2
			B Type	–	2.0	2.2	2.4
		Cover	A Type	1.7	1.9	2.1	2.3
			B Type	–	2.1	2.3	2.5
	Brake is Attached	Standard	A Type	1.8	2.0	2.2	2.4
			B Type	–	2.2	2.4	2.6
		Cover	A Type	1.9	2.1	2.3	2.5
			B Type	–	2.3	2.5	2.7

Note1) B-type of stroke is in case of using 2 connected blocks.
Note2) Maximum travel speed in table is limited speed by driving motor's maximum rotation(3000rpm) of Unit product at no load and Ball Screw's Critical Speed.

MS30 Standard Type

A : 1 block: Standard length
B : 2 block: Standard length

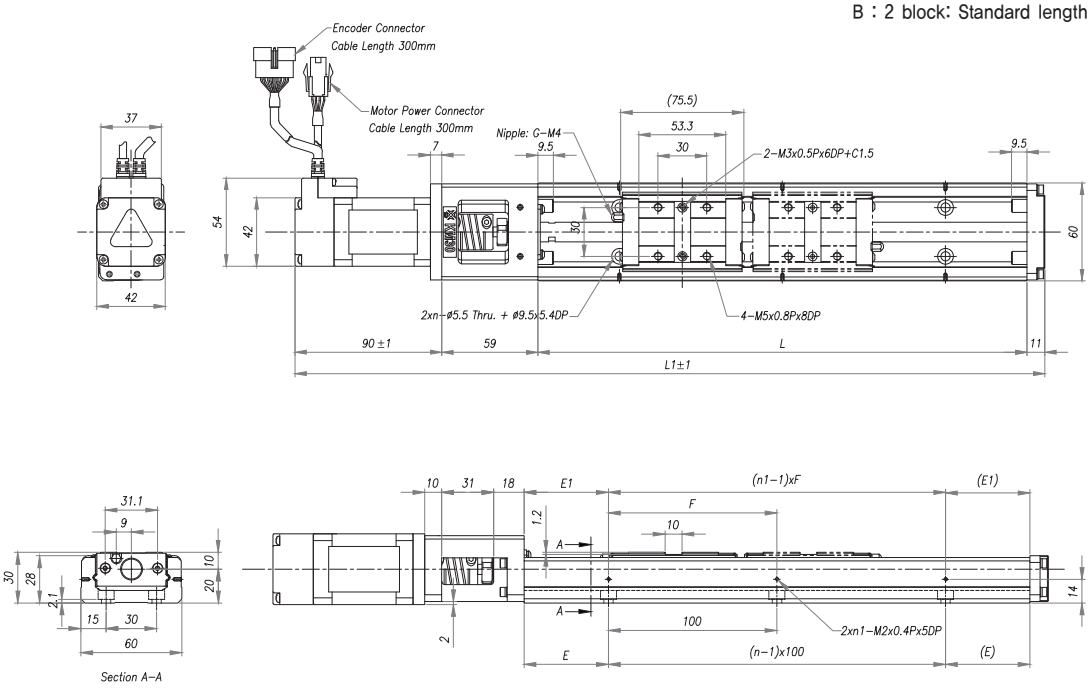

MS30 Cover Type

A : 1 block: Standard length
B : 2 block: Standard length

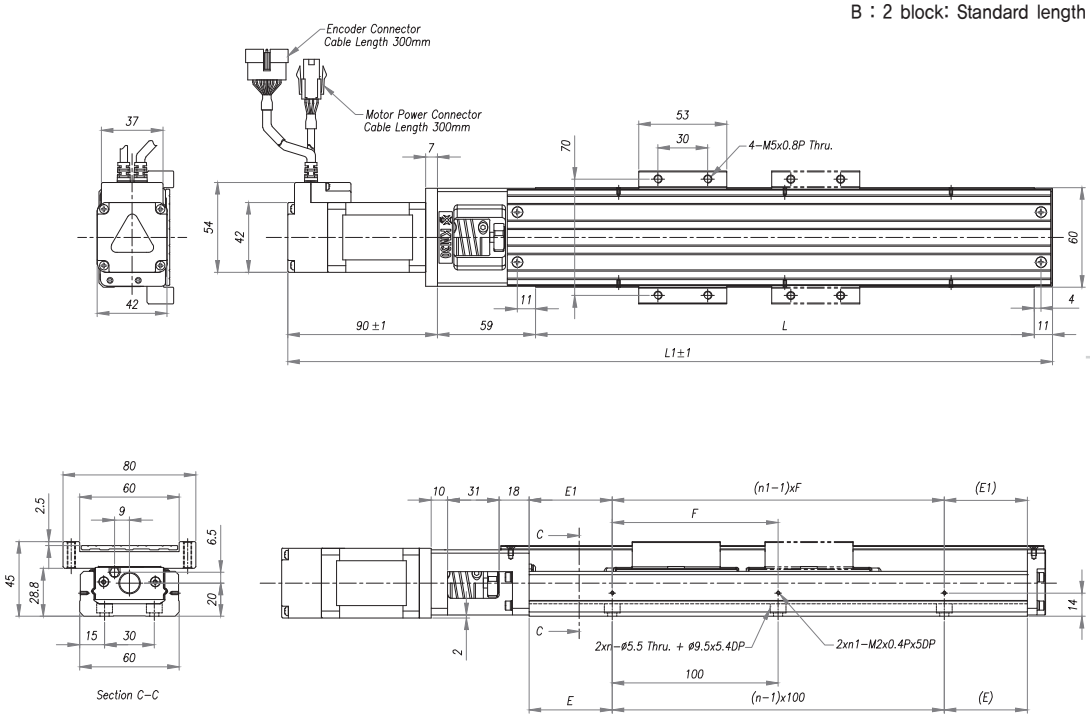

MS30 Standard Type + Brake

A : 1 block: Standard length
B : 2 block: Standard length

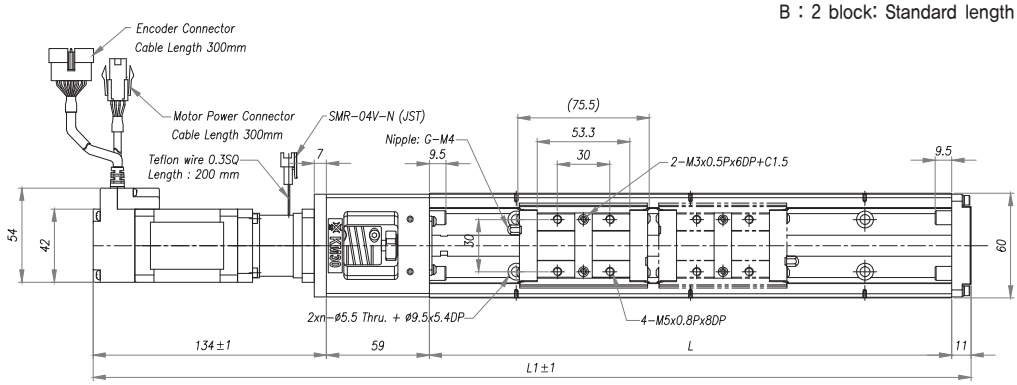

MS30 Cover Type + Brake

A : 1 block: Standard length
B : 2 block: Standard length

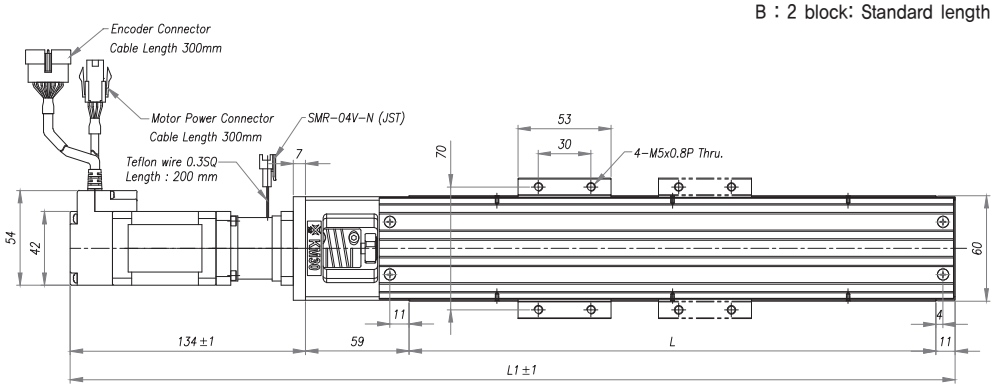

Main Specifications of MS30 Series. (Carriage – Nut A,B Type)									
Motor Type				EzM-42XL					
Rail Length L (mm)				150	200	300	400	500	600
Maximum Stroke (mm)			A Type	54.5	104.5	204.5	304.5	404.5	504.5
			B Type Note1)	–	–	128	228	328	428
Main Dimension (mm)	Standard		L1	310	360	460	560	660	760
	Cover		L1	310	360	460	560	660	760
	Standard + Brake		L1	354	404	504	604	704	804
	Cover + Brake		L1	354	404	504	604	704	804
	Common		F	100	100	200	200	200	200
			E	25	50	50	50	50	50
			E1	25	50	50	100	50	100
Number of Actuator Mounting Holes			n	2	2	3	4	5	6
Number of Sensor Mounting Holes			n1	2	2	2	2	3	3
Maximum Travel Speed Note2) (mm/sec)			Lead 5mm	250					
			Lead 10mm	500					
Electromagnetic Brake Sustainability (N)			Lead 5mm	224					
			Lead 10mm	112					
Unit Weight (Kg)	No Brake	Standard	A Type	2.1	2.4	3.0	3.6	4.3	4.9
			B Type	–	–	3.4	4.0	4.7	5.3
		Cover	A Type	2.3	2.6	3.2	3.8	4.5	5.1
			B Type	–	–	3.7	4.3	5.0	5.6
	Brake is attached	Standard	A Type	2.3	2.6	3.2	3.8	4.5	5.1
			B Type	–	–	3.6	4.2	4.9	5.5
		Cover	A Type	2.5	2.8	3.4	4.0	4.7	5.3
			B Type	–	–	3.9	4.5	5.2	5.8

Note1) B-type of stroke is in case of using 2 connected blocks.
Note2) Maximum travel speed in table is limited speed by driving motor's maximum rotation(3000rpm) of Unit product at no load and Ball Screw's Critical Speed.

MS30 Standard Type

C : 1 short block: Standard length
D : 2 short block: Standard length

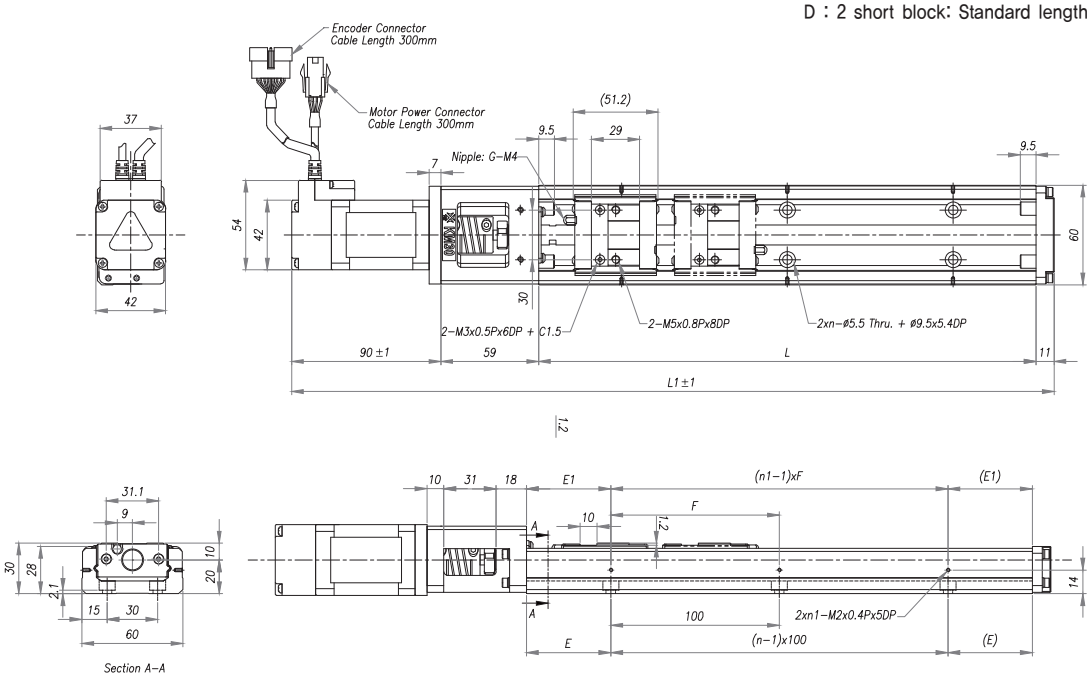

MS30 Cover Type

C : 1 short block: Standard length
D : 2 short block: Standard length

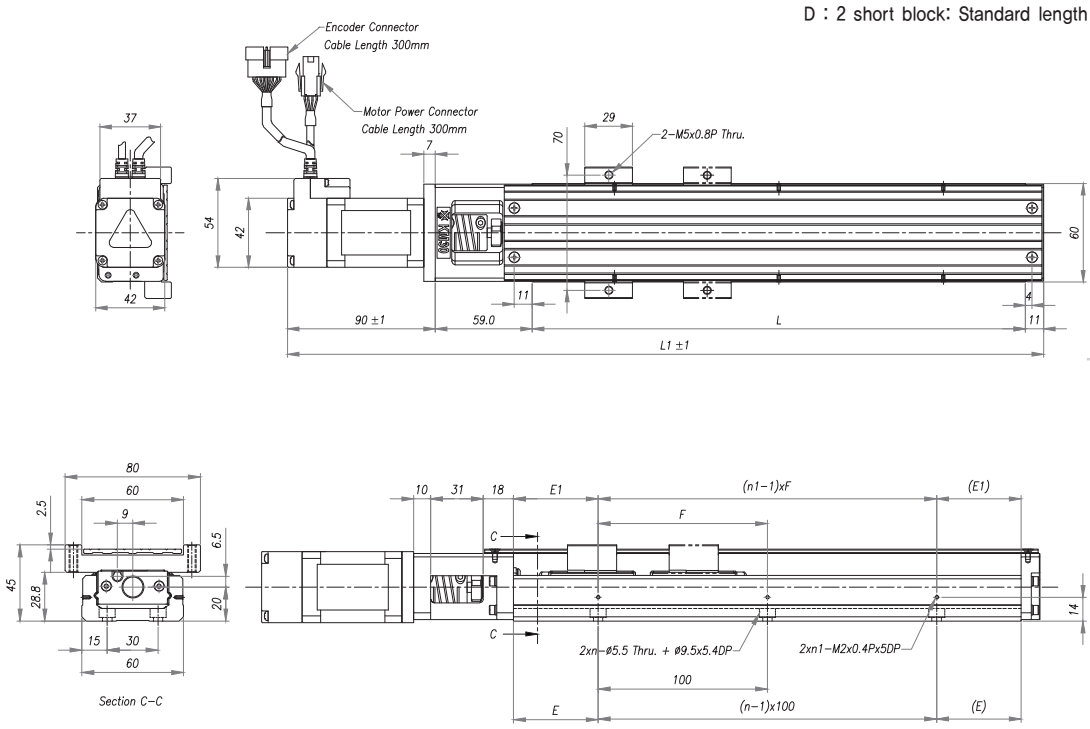

MS30 Standard Type + Brake

C : 1 short block: Standard length
D : 2 short block: Standard length

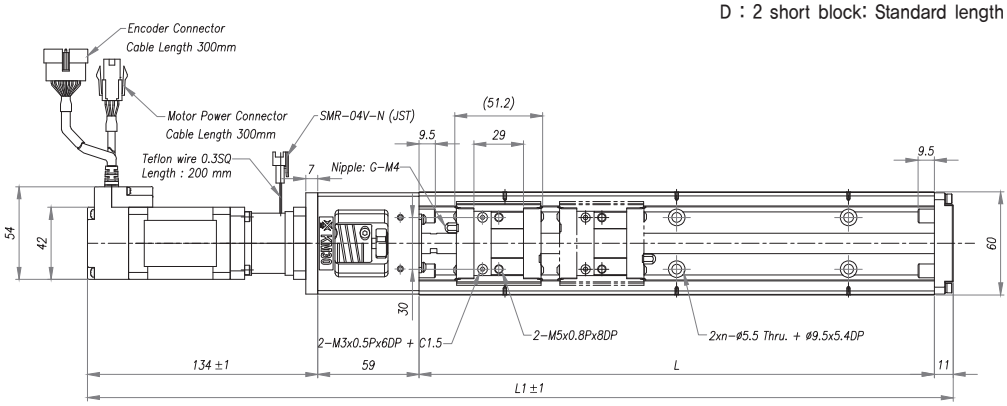

MS30 Cover Type + Brake

C : 1 short block: Standard length
D : 2 short block: Standard length

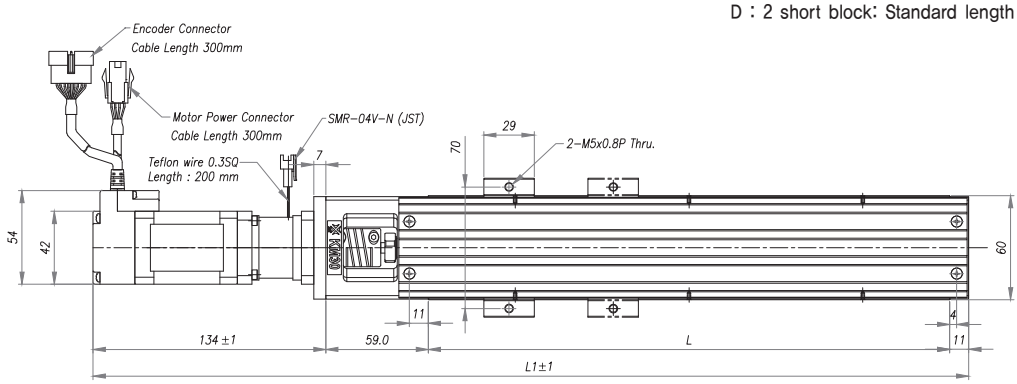

Main Specifications of MS30 Series. (Carriage – Nut C,D Type)									
Motor Type				EzM-42XL					
Rail Length L (mm)				150	200	300	400	500	600
Maximum Stroke (mm)			C Type	78.8	128.8	228.8	328.8	428.8	528.8
			D Type Note1)	26.6	76.6	176.6	276.6	376.6	476.6
Main Dimension (mm)	Standard		L1	310	360	460	560	660	760
	Cover		L1	310	360	460	560	660	760
	Standard + Brake		L1	354	404	504	604	704	804
	Cover + Brake		L1	354	404	504	604	704	804
	Common		F	100	100	200	200	200	200
			E	25	50	50	50	50	50
			E1	25	50	50	100	50	100
Number of Actuator Mounting Holes			n	2	2	3	4	5	6
Number of Sensor Mounting Holes			n1	2	2	2	2	3	3
Maximum Travel Speed Note2) (mm/sec)			Lead 5mm	250					
			Lead 10mm	500					
Electromagnetic Brake Sustainability (N)			Lead 5mm	224					
			Lead 10mm	112					
Unit Weight (Kg)	No Brake	Standard	C Type	2.0	2.3	2.9	3.5	4.2	4.8
			D Type	2.3	2.6	3.2	3.8	4.5	5.1
		Cover	C Type	2.1	2.4	3.0	3.6	4.3	5.0
			D Type	2.4	2.7	3.3	3.9	4.6	5.3
	Brake is Attached	Standard	C Type	2.2	2.5	3.1	3.7	4.4	5.0
			D Type	2.5	2.8	3.4	4.0	4.7	5.3
		Cover	C Type	2.3	2.6	3.2	3.8	4.5	5.2
			D Type	2.6	2.9	3.5	4.1	4.8	5.5

Note1) B-type of stroke is in case of using 2 connected blocks.
Note2) Maximum travel speed in table is limited speed by driving motor's maximum rotation(3000rpm) of Unit product at no load and Ball Screw's Critical Speed.

MS33 Standard Type

C : 1 short block: Standard length
D : 2 short block: Standard length

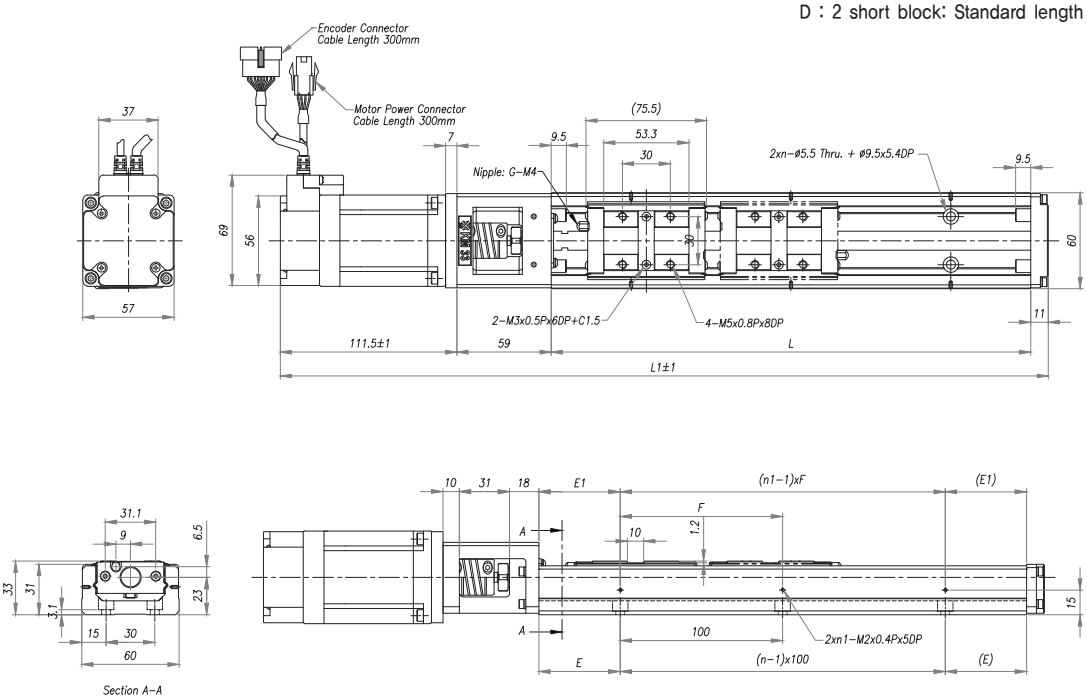

MS33 Cover Type

C : 1 short block: Standard length
D : 2 short block: Standard length

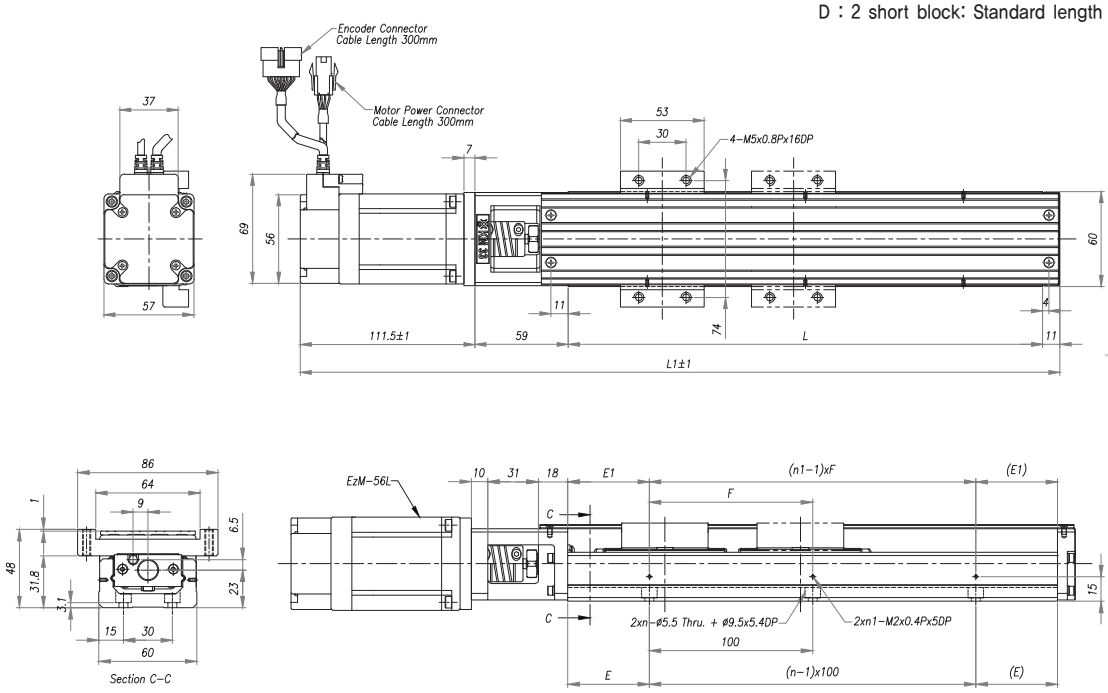

MS33 Standard Type + Brake

A : 1 block: Standard length
B : 2 blocks: Standard length

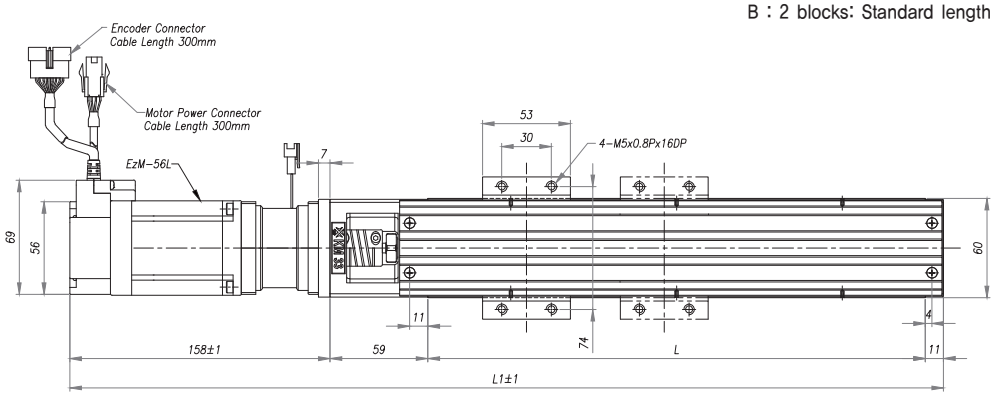

MS33 Cover Type + Brake

A : 1 block: Standard length
B : 2 blocks: Standard length

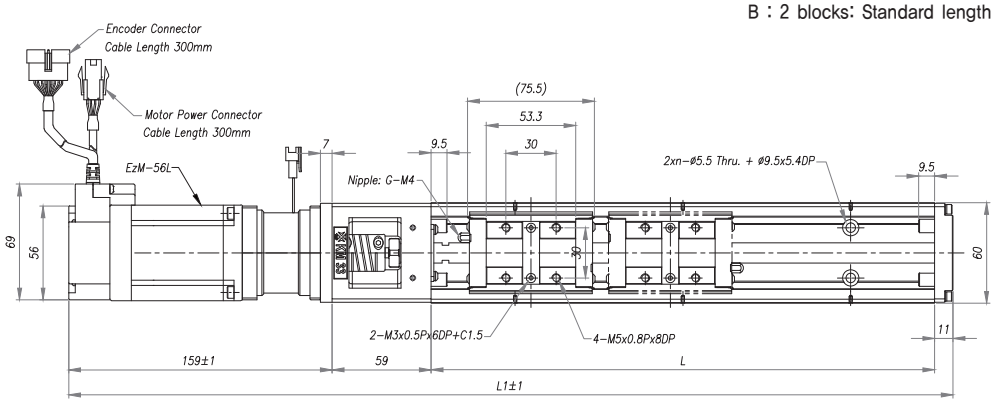

Main Specifications of MS33 Series. (Carriage – Nut A,B Type)									
Motor Type				EzM-56L					
Rail Length L (mm)				150	200	300	400	500	600
Maximum Stroke (mm)			A Type	54.5	104.5	204.5	304.5	404.5	504.5
			B Type Note1)	–	–	128	228	328	428
Main Dimension (mm)	Standard		L1	331.5	381.5	481.5	581.5	681.5	781.5
	Cover		L1	331.5	381.5	481.5	581.5	681.5	781.5
	Standard + Brake		L1	378	428	528	628	728	828
	Cover + Brake		L1	378	428	528	628	728	828
	Common		F	100	100	200	200	200	200
			E	25	50	50	50	50	50
			E1	25	50	50	100	50	100
Number of Actuator Mounting Holes			n	2	2	3	4	5	6
Number of Sensor Mounting Holes			n1	2	2	2	2	3	3
Maximum Travel Speed Note2) (mm/sec)			Lead 5mm	250					
			Lead 10mm	500					
Electromagnetic Brake Sustainability (N)			Lead 5mm	224					
			Lead 10mm	112					
Unit Weight (Kg)	No Brake	Standard	A Type	3.0	3.3	3.9	4.5	5.2	5.8
			B Type	–	–	4.3	4.9	5.6	6.2
		Cover	A Type	3.2	3.5	4.1	4.7	5.4	6.0
			B Type	–	–	4.6	5.2	5.9	6.5
	Brake is Attached	Standard	A Type	3.5	3.8	4.4	5.0	5.7	6.3
			B Type	–	–	4.8	5.4	6.1	6.7
		Cover	A Type	3.7	4.0	4.6	5.2	5.9	6.5
			B Type	–	–	5.1	5.7	6.4	7.0

Note1) B-type of stroke is in case of using 2 connected blocks.
Note2) Maximum travel speed in table is limited speed by driving motor's maximum rotation(3000rpm) of Unit product at no load and Ball Screw's Critical Speed.

MS33 Standard Type

C : 1 short block: Standard length
D : 2 short block: Standard length

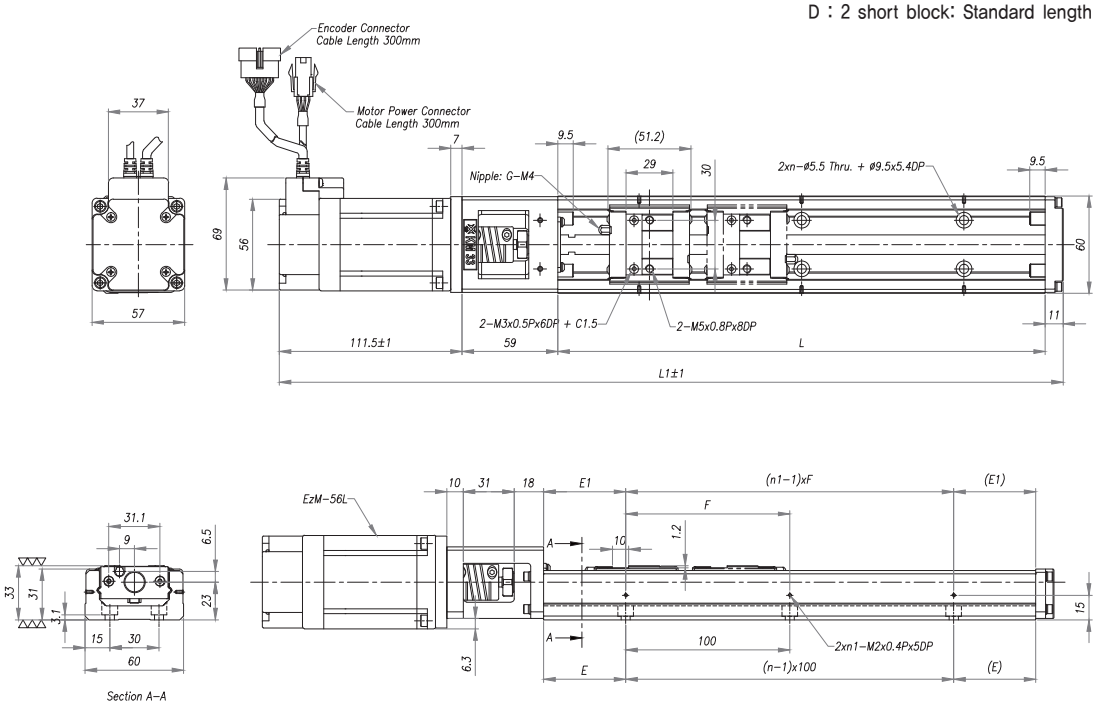

MS33 Cover Type

C : 1 short block: Standard length
D : 2 short block: Standard length

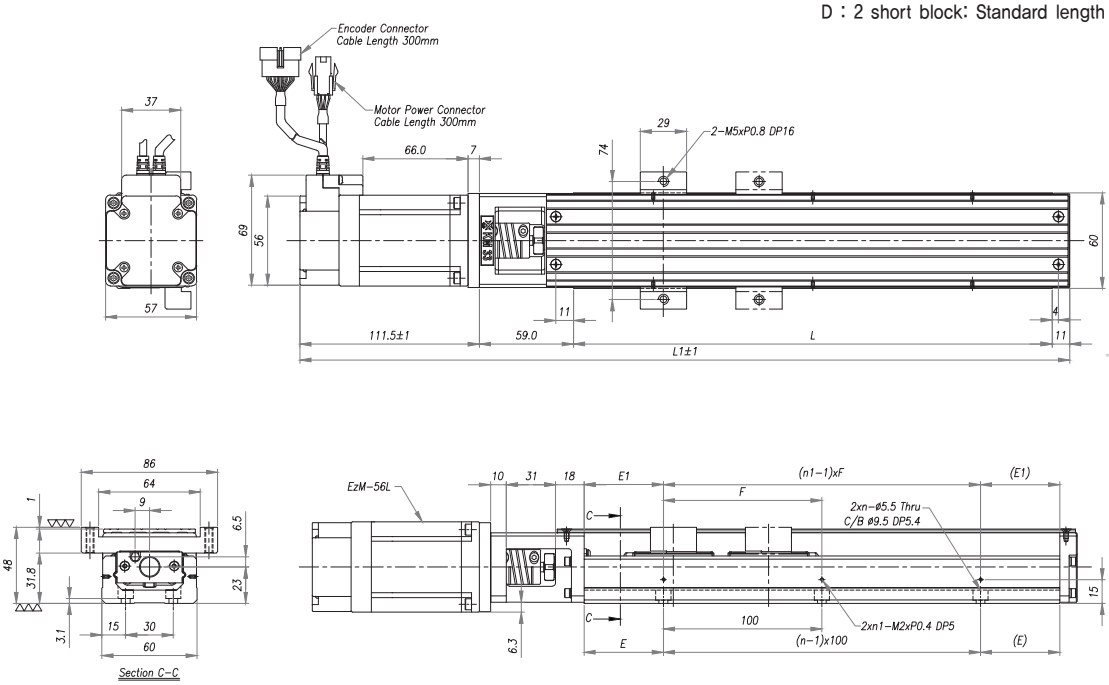

MS33 Standard Type + Brake

C : 1 short block: Standard length
D : 2 short block: Standard length

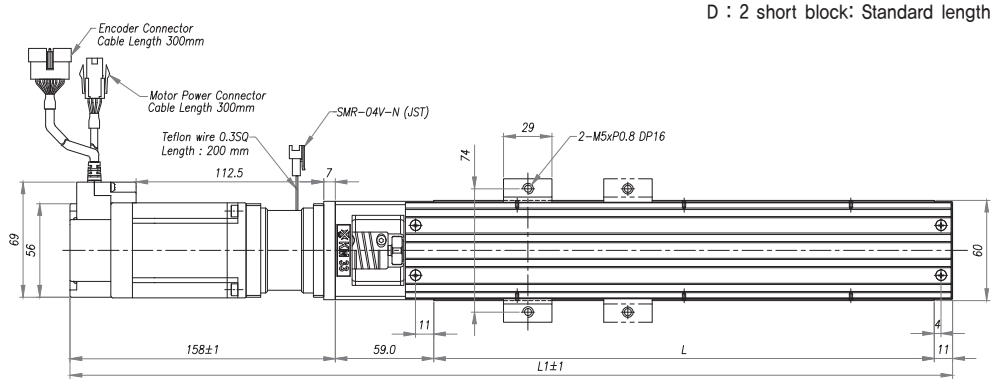

MS33 Cover Type + Brake

C : 1 short block: Standard length
D : 2 short block: Standard length

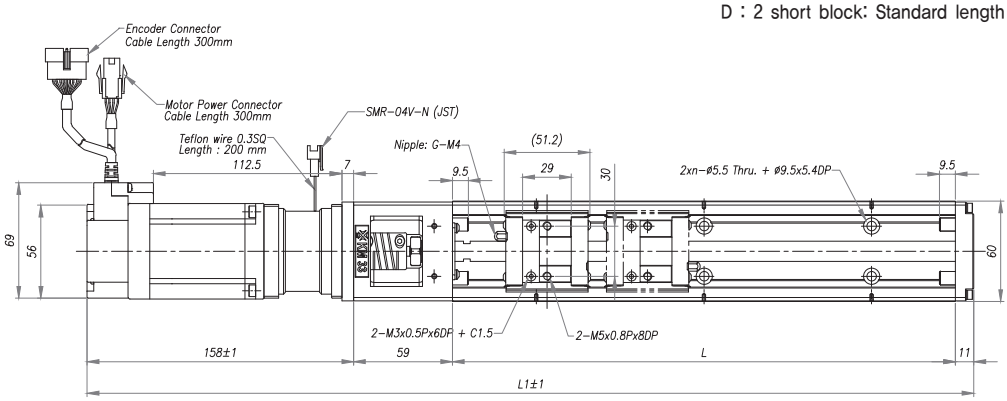

Main Specifications of MS33 Series. (Carriage - Nut C,D Type)									
Motor Type				EzM-56L					
Rail Length L (mm)				150	200	300	400	500	600
Maximum Stroke (mm)			C Type	78.8	128.8	228.8	328.8	428.8	528.8
			D Type Note1)	26.6	76.6	176.6	276.6	376.6	476.6
Main Dimension (mm)	Standard		L1	331.5	381.5	481.5	581.5	681.5	781.5
	Cover		L1	331.5	381.5	481.5	581.5	681.5	781.5
	Standard + Brake		L1	378	428	528	628	728	828
	Cover + Brake		L1	378	428	528	628	728	828
	Common		F	100	100	200	200	200	200
			E	25	50	50	50	50	50
			E1	25	50	50	100	50	100
Number of Actuator Mounting Holes			n	2	2	3	4	5	6
Number of Sensor Mounting Holes			n1	2	2	2	2	3	3
Maximum Travel Speed Note2) (mm/sec)			Lead 5mm	250					
			Lead 10mm	500					
Electromagnetic Brake Sustainability (N)			Lead 5mm	224					
			Lead 10mm	112					
Unit Weight (Kg)	No Brake	Standard	C Type	2.9	3.2	3.8	4.4	5.1	5.7
			D Type	3.1	3.4	4.0	4.6	5.3	5.8
		Cover	C Type	3.0	3.3	3.9	4.5	5.2	5.8
			D Type	3.3	3.6	4.2	4.8	5.5	6.0
	Brake is Attached	Standard	C Type	3.4	3.7	4.5	4.9	5.6	6.2
			D Type	3.6	3.9	4.5	5.1	5.8	6.3
		Cover	C Type	3.5	3.8	4.4	5.0	5.7	6.3
			D Type	3.8	4.1	4.7	5.3	6.0	6.5

Note1) B-type of stroke is in case of using 2 connected blocks.
Note2) Maximum travel speed in table is limited speed by driving motor's maximum rotation(3000rpm) of Unit product at no load and Ball Screw's Critical Speed.

MS45 Standard Type

A : 1 block: Standard length
B : 2 blocks: Standard length

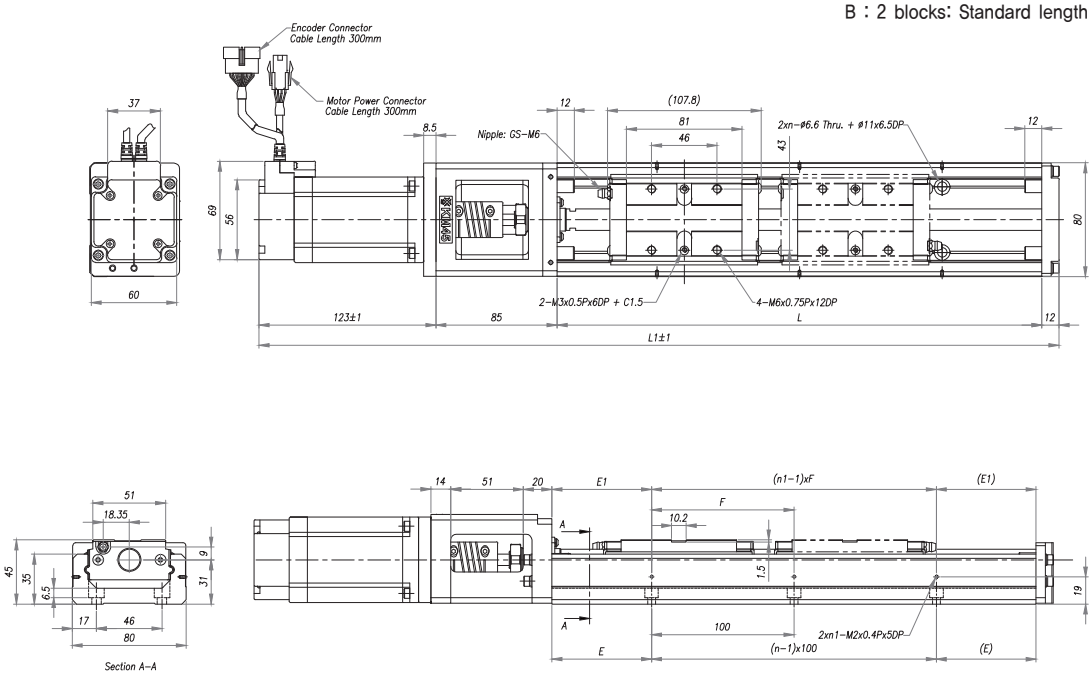

MS45 Cover Type

A : 1 block: Standard length
B : 2 blocks: Standard length

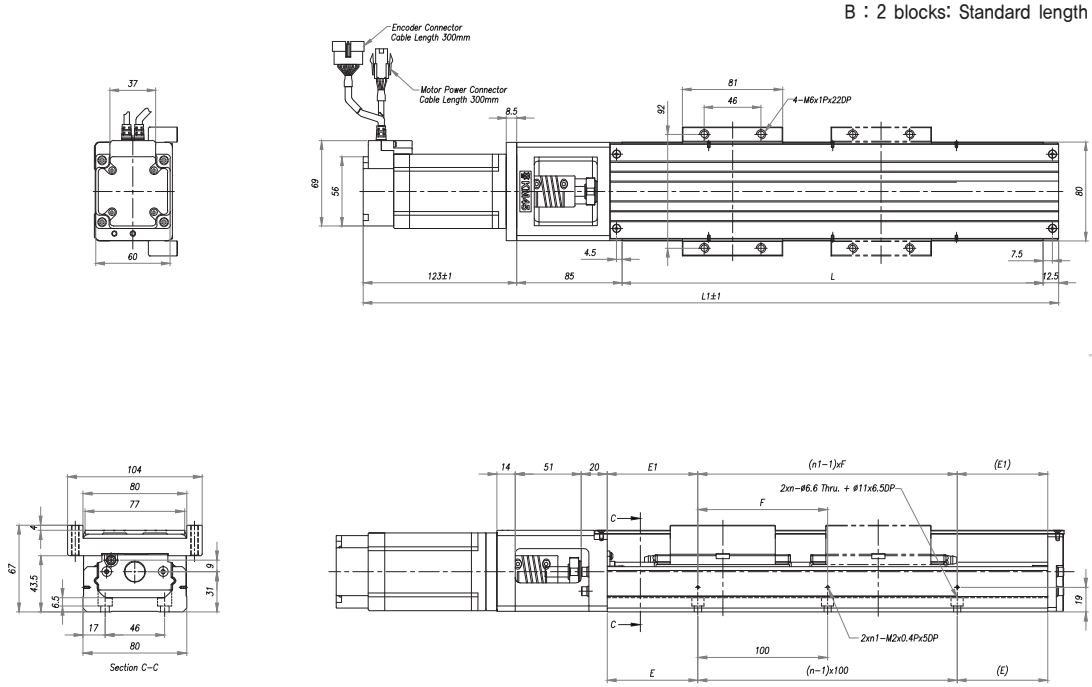

MS45 Standard Type + Brake

A : 1 block: Standard length
B : 2 blocks: Standard length

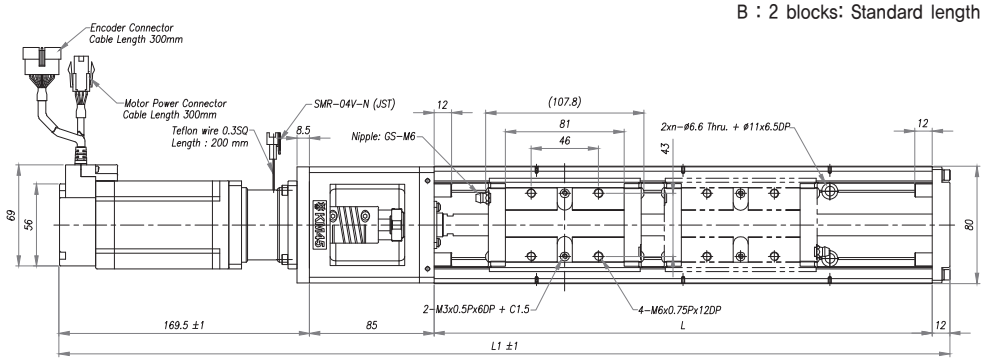

MS45 Cover Type + Brake

A : 1 block: Standard length
B : 2 blocks: Standard length

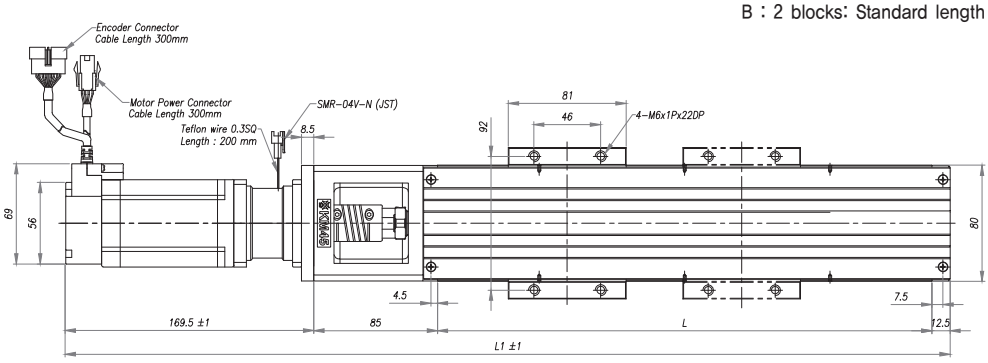

Main Specifications of MS45 Series. (Carriage – Nut A,B Type)									
Motor Type				EzM-60L					
Rail Length L (mm)				340	440	540	640	740	940
Maximum Stroke (mm)			A Type	208.2	308.2	408.2	508.2	608.2	808.2
			B Type Note1)	100.4	200.4	300.4	400.4	500.4	700.4
Main Dimension (mm)	Standard		L1	551.5	651.5	751.5	851.5	951.5	1151.5
	Cover			552	652	752	852	952	1152
	Standard + Brake			598	698	798	898	998	1198
	Cover + Brake			598.5	698.5	798.5	898.5	998.5	1198.5
	Common		F	100	100	100	100	100	100
			E	70	70	70	70	70	70
			E1	70	20	70	20	70	70
Number of Actuator Mounting Holes			n	3	4	5	6	7	9
Number of Sensor Mounting Holes			n1	2	3	3	4	4	5
Maximum Travel Speed Note2) (mm/sec)			Lead 10mm	500					430
			Lead 20mm	1000					840
Electromagnetic Brake Sustainability (N)			Lead 10mm	112					
			Lead 20mm	56					
Unit Weight (Kg)	No Brake	Standard	A Type	8.4	9.7	11.0	12.3	13.7	16.0
			B Type	9.6	10.9	12.2	13.5	14.9	17.2
		Cover	A Type	9.0	10.3	11.6	12.9	14.3	16.6
			B Type	10.4	11.7	13.0	14.3	15.7	18.0
	Brake is Attached	Standard	A Type	8.9	10.2	11.5	12.8	14.2	16.5
			B Type	10.1	11.4	12.7	14.0	15.4	17.7
		Cover	A Type	9.5	10.8	12.1	13.4	14.8	17.1
			B Type	10.9	12.2	13.5	14.8	16.2	18.5

Note1) B-type of stroke is in case of using 2 connected blocks.
Note2) Maximum travel speed in table is limited speed by driving motor's maximum rotation(3000rpm) of Unit product at no load and Ball Screw's Critical Speed.

MS45 Standard Type

C : 1 short block: Standard length
D : 2 short block: Standard length

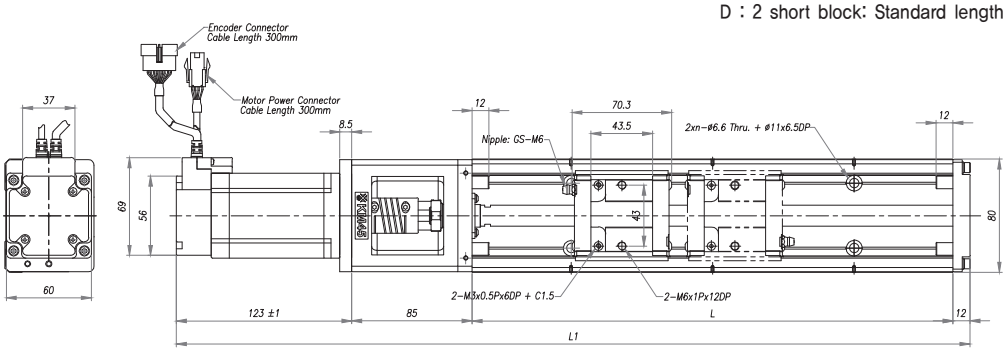

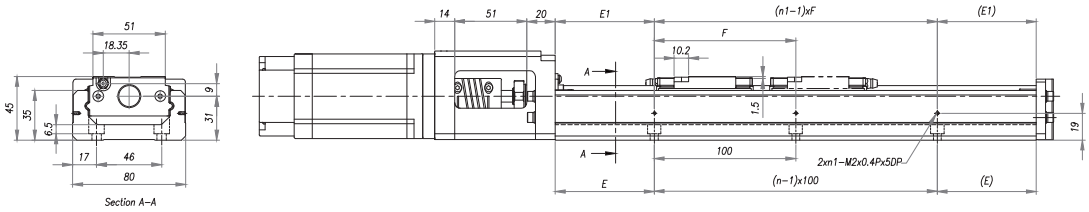

MS45 Cover Type

C : 1 short block: Standard length
D : 2 short block: Standard length

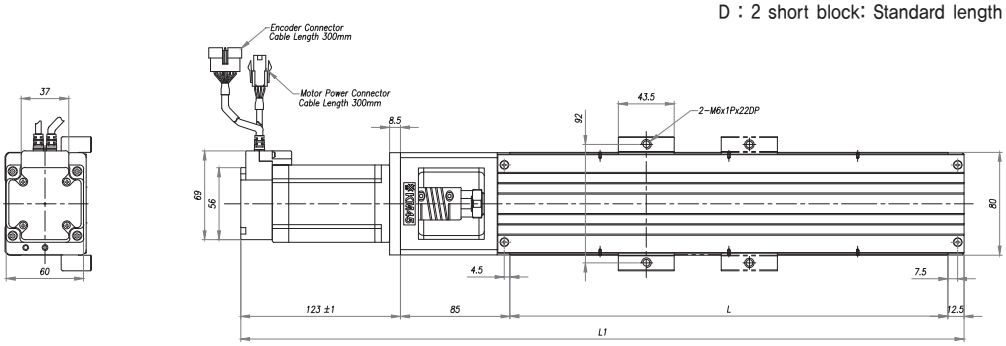

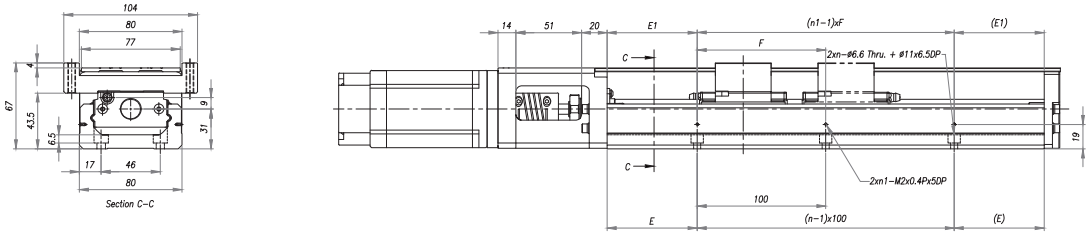

MS45 Standard Type + Brake

C : 1 short block: Standard length
D : 2 short block: Standard length

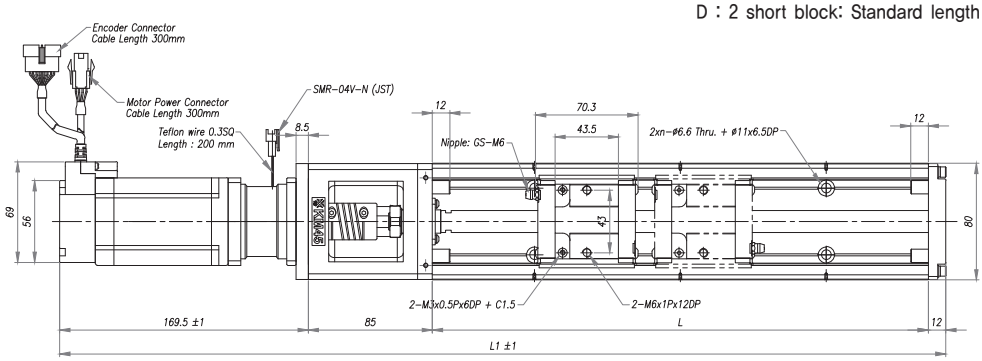

MS45 Cover Type + Brake

C : 1 short block: Standard length
D : 2 short block: Standard length

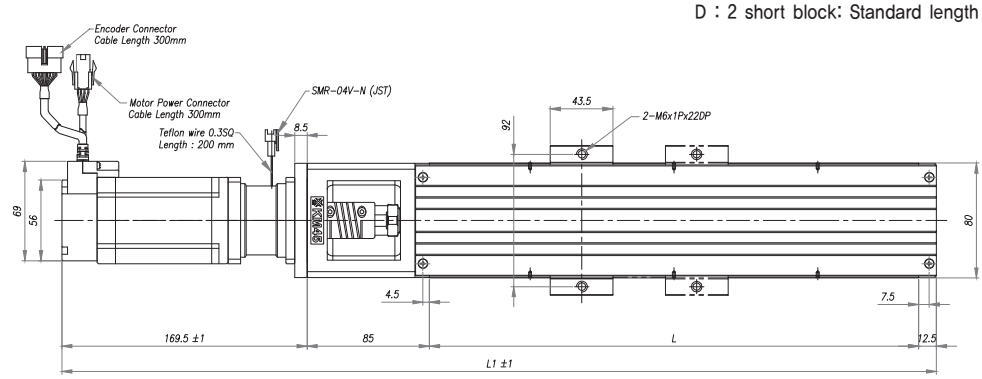

Main Specifications of MS45 Series. (Carriage – Nut C,D Type)									
Motor Type				EzM-60L					
Rail Length L (mm)				340	440	540	640	740	940
Maximum Stroke (mm)			C Type	244.7	344.7	444.7	544.7	644.7	844.7
			D Type Note1)	173.4	273.4	373.4	473.4	573.4	773.4
Main Dimension (mm)	Standard		L1	551.5	651.5	751.5	851.5	951.5	1151.5
	Cover			552	652	752	852	952	1152
	Standard + Brake			598	698	798	898	998	1198
	Cover + Brake			598.5	698.5	798.5	898.5	998.5	1198.5
	Common		F	100	100	100	100	100	100
			E	70	70	70	70	70	70
			E1	70	20	70	20	70	70
Number of Actuator Mounting Holes			n	3	4	5	6	7	9
Number of Sensor Mounting Holes			n1	2	3	3	4	4	5
Maximum Travel Speed Note2) (mm/sec)			Lead 10mm	500					430
			Lead 20mm	1000					840
Electromagnetic Brake Sustainability (N)			Lead 10mm	112					
			Lead 20mm	56					
Unit Weight (Kg)	No Brake	Standard	C Type	8.0	9.3	10.6	11.9	13.3	15.6
			D Type	8.8	10.1	11.4	12.7	14.1	16.4
		Cover	C Type	8.2	9.5	10.8	12.1	13.5	15.8
			D Type	9.2	10.5	11.8	13.1	14.5	16.8
	Brake is Attached	Standard	C Type	8.5	9.8	11.1	12.4	13.8	16.1
			D Type	9.3	10.6	11.9	13.2	14.6	16.9
		Cover	C Type	8.7	10.0	11.3	12.6	14.0	16.3
			D Type	9.7	11.0	12.3	13.6	15.0	17.3

Note1) B-type of stroke is in case of using 2 connected blocks.
Note2) Maximum travel speed in table is limited speed by driving motor's maximum rotation(3000rpm) of Unit product at no load and Ball Screw's Critical Speed.

MS46 Standard Type

A : 1 block: Standard length
B : 2 blocks: Standard length

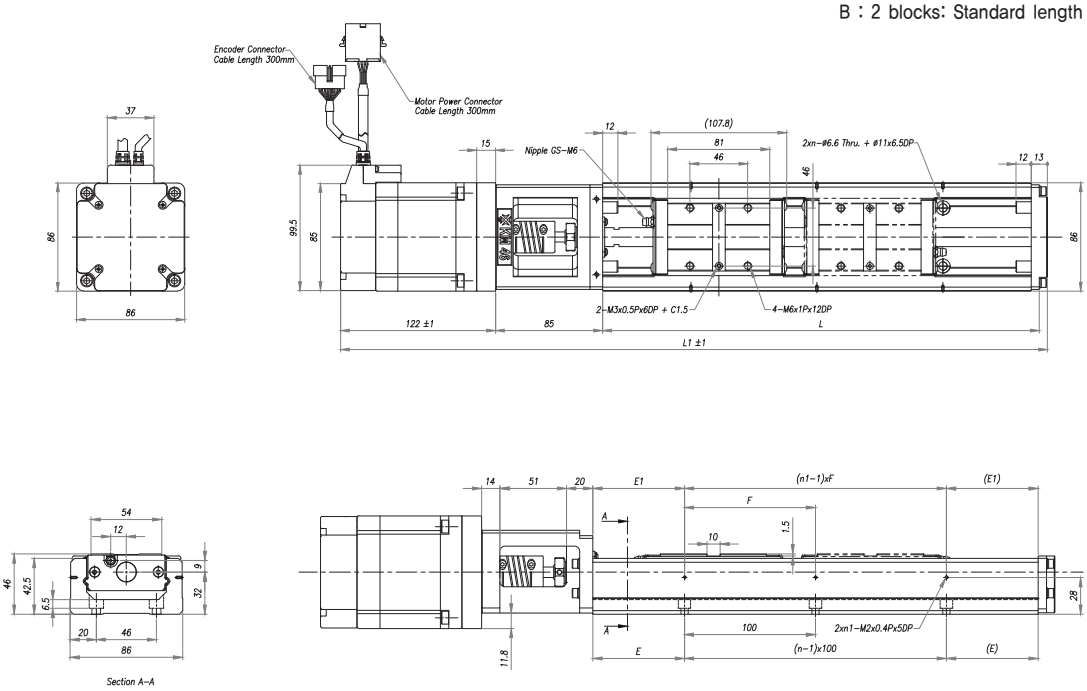

MS46 Cover Type

A : 1 block: Standard length
B : 2 blocks: Standard length

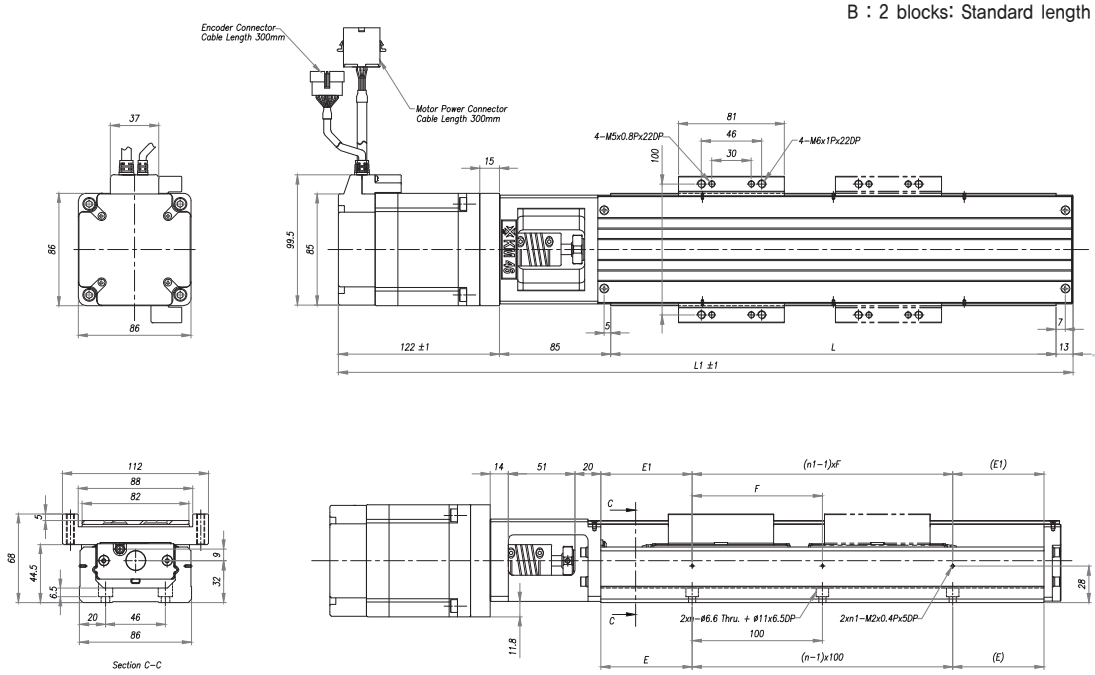

MS46 Standard Type + Brake

A : 1 block: Standard length
B : 2 blocks: Standard length

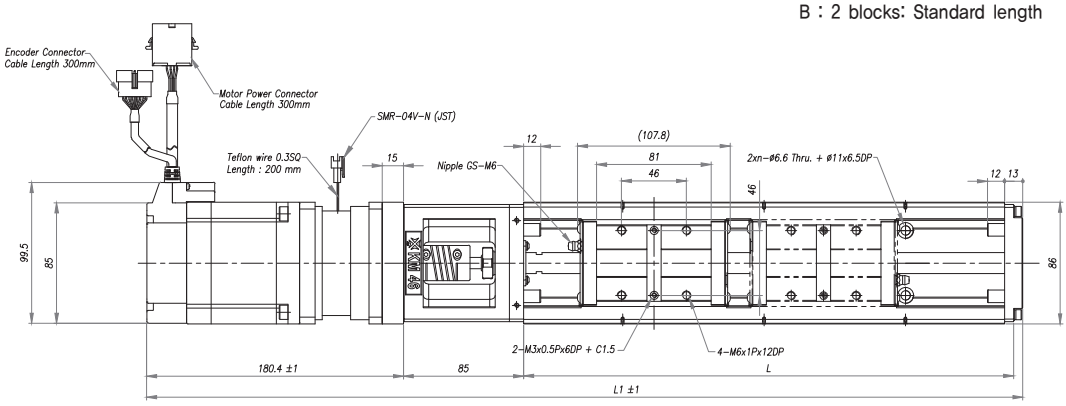

MS46 Cover Type + Brake

A : 1 block: Standard length
B : 2 blocks: Standard length

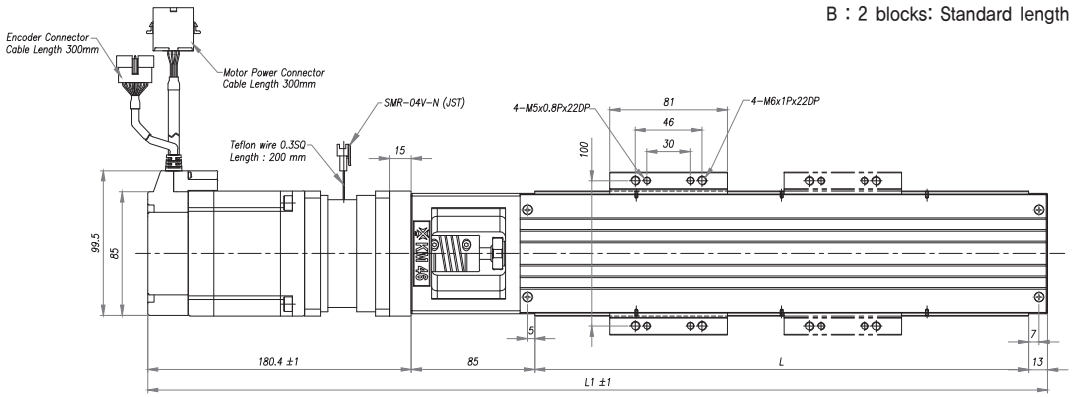

Main Specifications of MS46 Series. (Carriage – Nut A,B Type)									
Motor Type				EzM-86M					
Rail Length L (mm)				340	440	540	640	740	940
Maximum Stroke (mm)			A Type	208.2	308.2	408.2	508.2	608.2	808.2
			B Type Note1)	100.4	200.4	300.4	400.4	500.4	700.4
Main Dimension (mm)	Standard		L1	560	660	760	860	960	1160
	Cover			560	660	760	860	960	1160
	Standard + Brake			618.4	718.4	818.4	918.4	1018.4	1218.4
	Cover + Brake			618.4	718.4	818.4	918.4	1018.4	1218.4
	Common		F	100	100	100	100	100	100
			E	70	70	70	70	70	70
			E1	70	20	70	20	70	70
Number of Actuator Mounting Holes			n	3	4	5	6	7	9
Number of Sensor Mounting Holes			n1	2	3	3	4	4	5
Maximum Travel Speed Note2) (mm/sec)			Lead 10mm	500					430
			Lead 20mm	1000					840
Electromagnetic Brake Sustainability (N)			Lead 10mm	112					
			Lead 20mm	56					
Unit Weight (Kg)	No Brake	Standard	A Type	10.0	11.3	12.6	13.9	15.3	17.6
			B Type	11.2	12.5	13.8	15.1	16.5	18.8
		Cover	A Type	10.6	11.9	13.2	14.5	15.9	18.2
			B Type	12.0	13.3	14.6	15.9	17.3	19.6
	Brake is Attached	Standard	A Type	11.3	12.6	13.9	15.2	16.6	18.9
			B Type	12.5	13.8	15.1	16.4	17.8	20.1
		Cover	A Type	11.9	13.2	14.5	15.8	17.2	19.5
			B Type	13.3	14.6	15.9	17.2	18.6	20.9

Note1) B-type of stroke is in case of using 2 connected blocks.
Note2) Maximum travel speed in table is limited speed by driving motor's maximum rotation(3000rpm) of Unit product at no load and Ball Screw's Critical Speed.

MS46 Standard Type

C : 1 short block: Standard length
D : 2 short block: Standard length

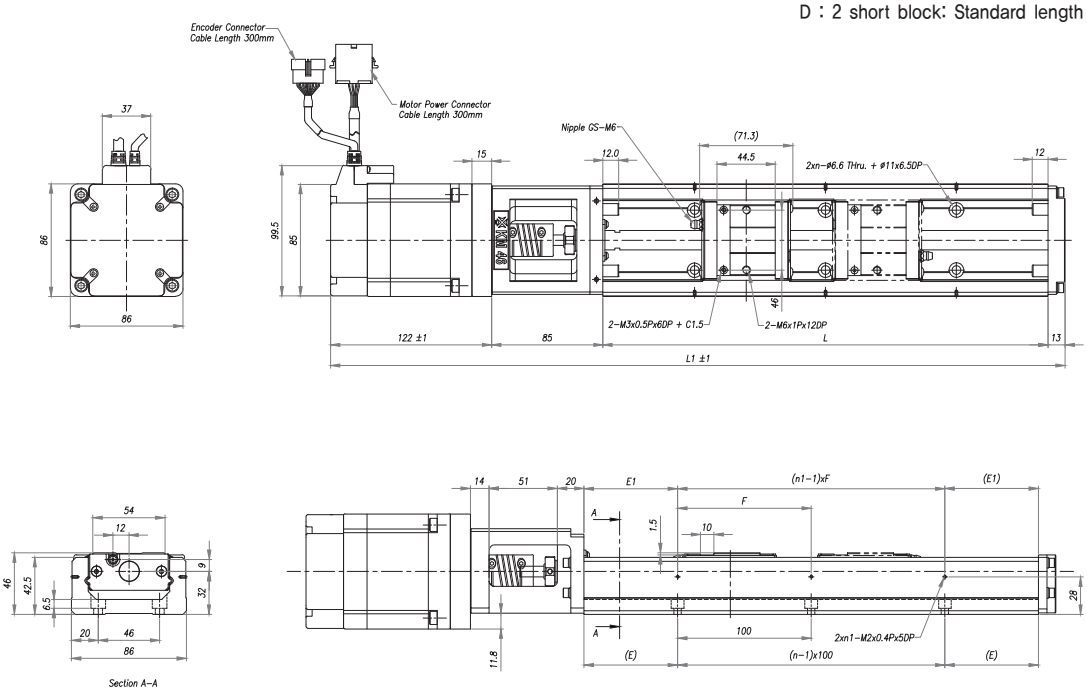

MS46 Cover Type

C : 1 short block: Standard length
D : 2 short block: Standard length

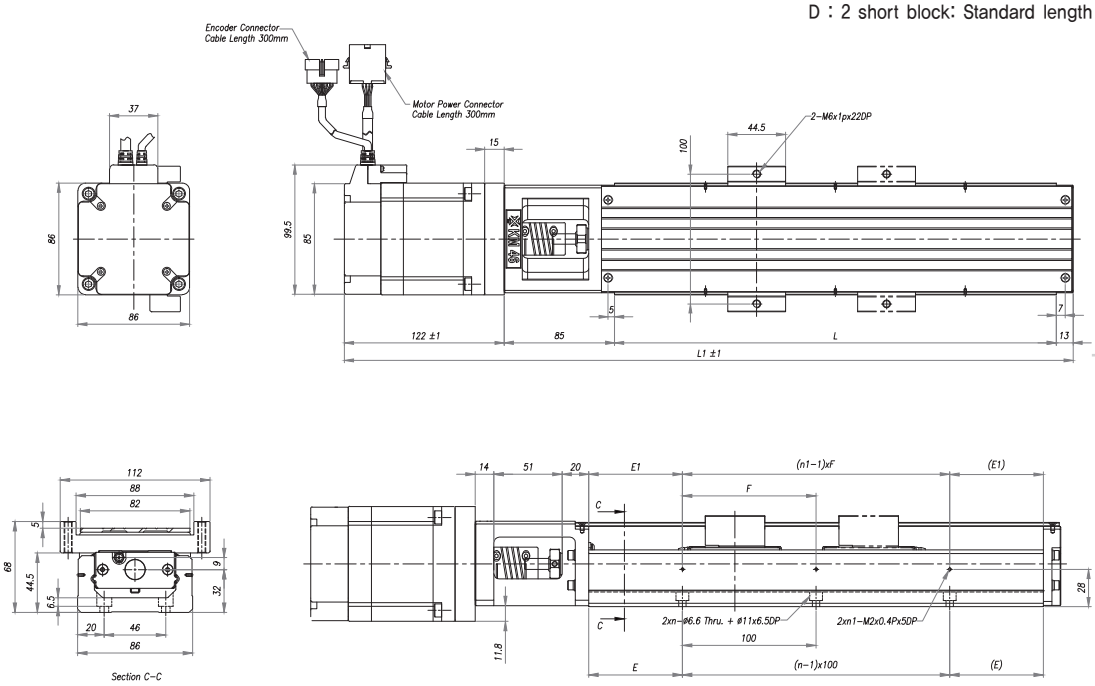

MS46 Standard Type + Brake

C : 1 short block: Standard length
D : 2 short block: Standard length

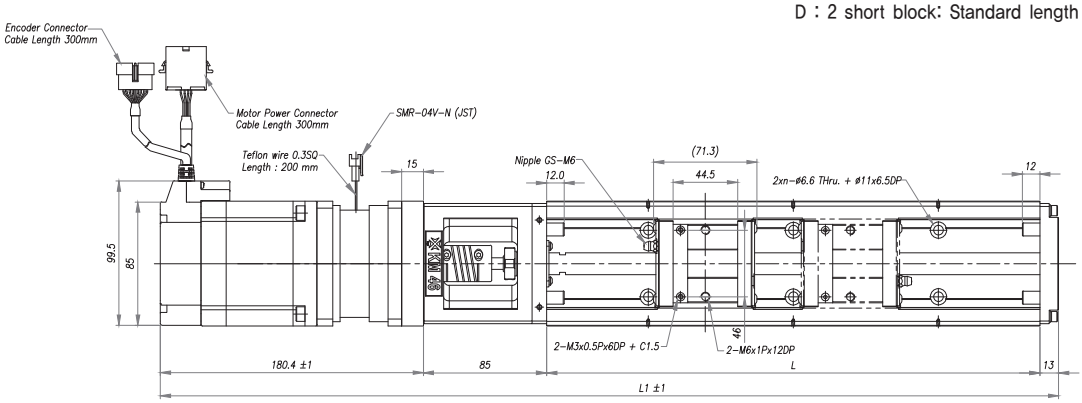

MS46 Cover Type + Brake

C : 1 short block: Standard length
D : 2 short block: Standard length

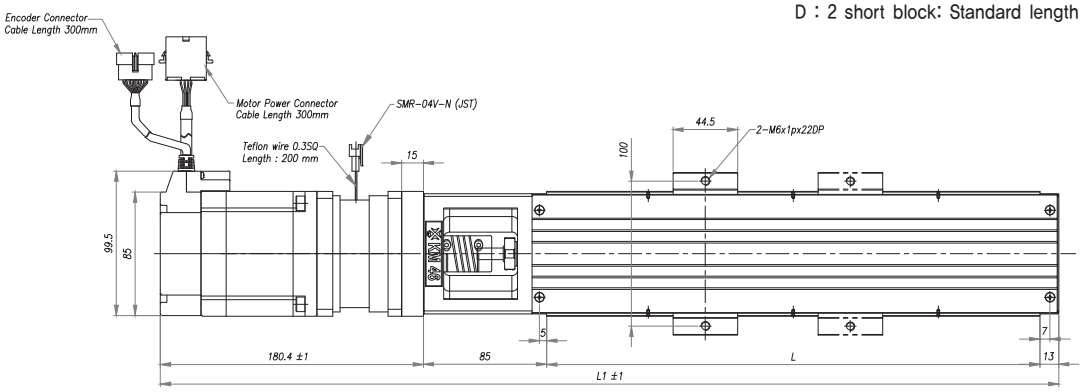

Main Specifications of MS46 Series. (Carriage – Nut C,D Type)									
Motor Type				EzM-86M					
Rail Length L (mm)				340	440	540	640	740	940
Maximum Stroke (mm)			C Type	244.7	344.7	444.7	544.7	644.7	844.7
			DB Type Note1)	173.4	273.4	373.4	473.4	573.4	773.4
Main Dimension (mm)	Standard		L1	560	660	760	860	960	1160
	Cover		L1	560	660	760	860	960	1160
	Standard + Brake		L1	618.4	718.4	818.4	918.4	1018.4	1218.4
	Cover + Brake		L1	618.4	718.4	818.4	918.4	1018.4	1218.4
	Common		F	100	100	100	100	100	100
			E	70	70	70	70	70	70
			E1	70	20	70	20	70	70
Number of Actuator Mounting Holes			n	3	4	5	6	7	9
Number of Sensor Mounting Holes			n1	2	3	3	4	4	5
Maximum Travel Speed Note2) (mm/sec)			Lead 10mm	500					430
			Lead 20mm	1000					840
Electromagnetic Brake Sustainability (N)			Lead 10mm	112					
			Lead 20mm	56					
Unit Weight (Kg)	No Brake	Standard	C Type	9.6	10.9	12.2	13.5	14.9	17.1
			D Type	10.4	11.7	13.0	14.3	15.7	18.0
		Cover	C Type	9.8	11.1	12.4	13.7	15.1	17.4
			D Type	10.8	12.1	13.4	14.7	16.1	18.4
	Brake is Attached	Standard	C Type	10.9	12.2	13.5	14.7	16.2	18.4
			D Type	11.7	13.0	14.3	15.6	17.0	19.3
		Cover	C Type	11.1	12.4	13.7	15.0	16.4	18.7
			D Type	12.1	13.4	14.7	16.0	17.4	19.7

Note1) B-type of stroke is in case of using 2 connected blocks.
Note2) Maximum travel speed in table is limited speed by driving motor's maximum rotation(3000rpm) of Unit product at no load and Ball Screw's Critical Speed.

MS55 Standard Type

A : 1 block: Standard length
B : 2 blocks: Standard length

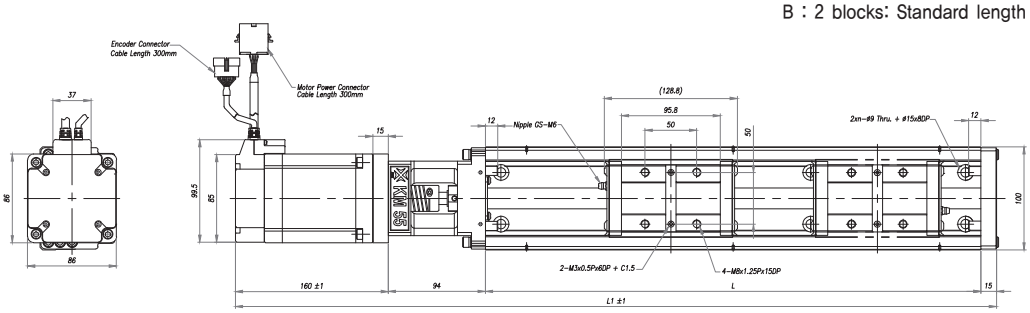

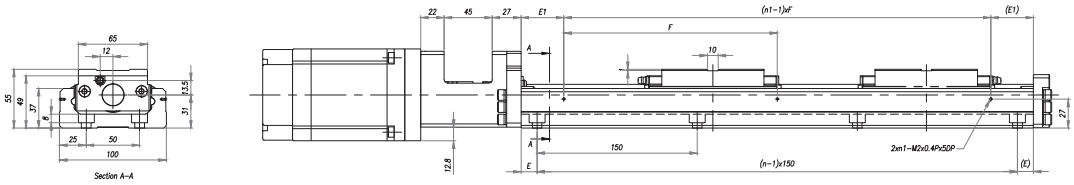

MS55 Cover Type

A : 1 block: Standard length
B : 2 blocks: Standard length

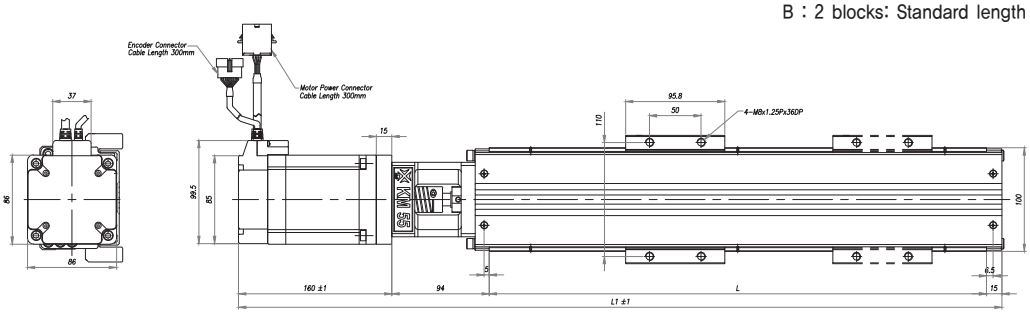

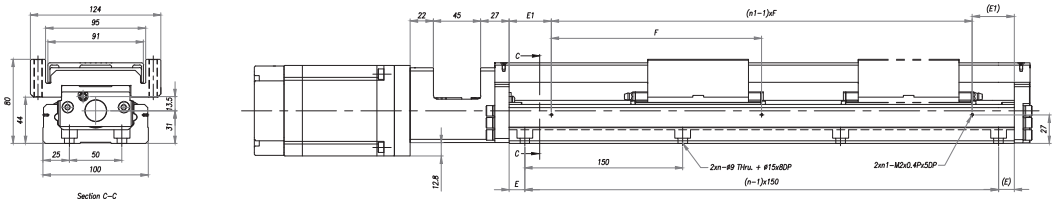

MS55 Standard Type + Brake

A : 1 block: Standard length
B : 2 blocks: Standard length

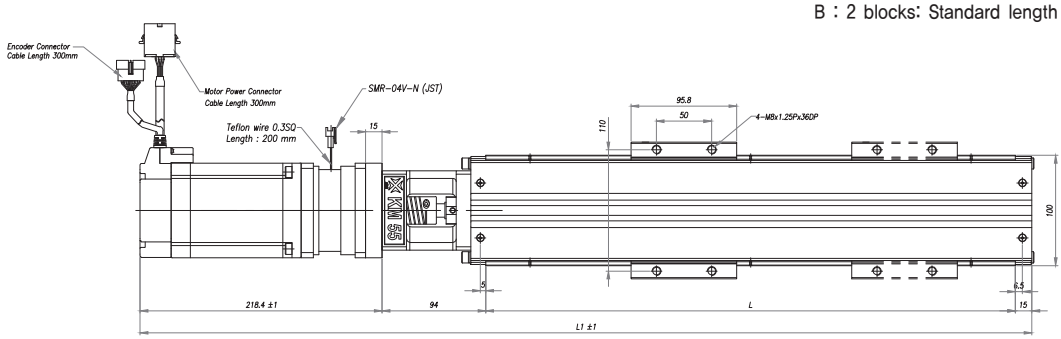

MS55 Cover Type + Brake

A : 1 block: Standard length
B : 2 blocks: Standard length

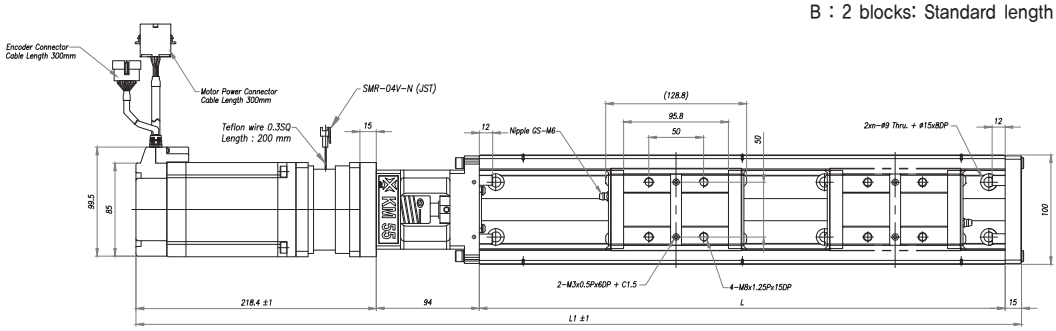

Main Specifications of MS55 Series. (Carriage – Nut A,B Type)								
Motor Type				EzM-86L				
Rail Length L (mm)				980	1080	1180	1280	1380
Maximum Stroke (mm)			A Type	828	928	1028	1128	1228
			B Type Note1)	699	799	899	999	1099
Main Dimension (mm)	Standard		L1	1249	1349	1449	1549	1649
	Cover			1249	1349	1449	1549	1649
	Standard + Brake			1307.4	1407.4	1507.4	1607.4	1707.4
	Cover + Brake			1307.4	1407.4	1507.4	1607.4	1707.4
	Common		F	150	150	150	150	150
			E	40	15	65	40	15
			E1	90	40	90	40	90
Number of Actuator Mounting Holes			n	7	8	8	9	10
Number of Sensor Mounting Holes			n1	5	6	6	7	7
Maximum Travel Speed Note2) (mm/sec)			Lead 20mm	800		740	620	530
Electromagnetic Brake Sustainability (N)			Lead 20mm	56				
Unit Weight (Kg)	No Brake	Standard	A Type	23.9	25.6	27.3	29.0	30.7
			B Type	25.6	27.3	29.0	30.7	32.0
		Cover	A Type	25.8	27.5	29.2	30.9	32.6
			B Type	28.2	29.9	31.6	33.3	34.6
	Brake is Attached	Standard	A Type	25.2	26.9	28.6	30.3	32.0
			B Type	26.9	28.6	30.3	32.0	33.3
		Cover	A Type	27.1	28.8	30.5	32.2	33.9
			B Type	29.5	31.2	32.9	34.6	35.9

Note1) B-type of stroke is in case of using 2 connected blocks.
Note2) Maximum travel speed in table is limited speed by driving motor's maximum rotation(3000rpm) of Unit product at no load and Ball Screw's Critical Speed.

● Combination of Pulse Input Drive and Motor

Unit Model Name		Motor Model Name	Drive Model Name
MS26	MS26-□-□-□-□+ST-42XL MS26-□-□-□-□+MI-42XL	EzM-42XL-A EzM-42XL-A	EzS-PD-42XL-A EzS-PD-MI-42XL-A
MS30	MS30-□-□-□-□+ST-42XL MS30-□-□-□-□+MI-42XL	EzM-42XL-A EzM-42XL-A	EzS-PD-42XL-A EzS-PD-MI-42XL-A
MS33	MS33-□-□-□-□+ST-56L	EzM-56L-A	EzS-PD-56L-A
MS45	MS45-□-□-□-□+ST-60L	EzM-60L-A	EzS-PD-60L-A
MS46	MS46-□-□-□-□+ST-86M	EzM-86M-A	EzS-PD-86M-A
MS55	MS55-□-□-□-□+ST-86L	EzM-86L-A	EzS-PD-86L-A

● Combination of Position Controller Embedded Drive and Motor

Unit Model Name		Motor Model Name	Drive Model Name
MS26	MS26-□-□-□-□+ST-42XL MS26-□-□-□-□+MIPR-42XL	EzM-42XL-A EzM-42XL-A	EzS-NDR-42XL-A EzS-NDR-MI-42XL-A
MS30	MS30-□-□-□-□+ST-42XL MS30-□-□-□-□+MIPR-42XL	EzM-42XL-A EzM-42XL-A	EzS-NDR-42XL-A EzS-NDR-MI-42XL-A
MS33	MS33-□-□-□-□+PR-56L	EzM-56L-A	EzS-NDR-56L-A
MS45	MS45-□-□-□-□+PR-60L	EzM-60L-A	EzS-NDR-60L-A
MS46	MS46-□-□-□-□+PR-86M	EzM-86M-A	EzS-NDR-86M-A
MS55	MS55-□-□-□-□+ST-86L	EzM-86L-A	EzS-NDR-86L-A

● Pulse Input Drive Specification

Motor Model		EzM-42 series	EzM-56 series	EzM-60 series	EzM-86 series
Driver Model		EzS-PD-42 series	EzS-PD-56 series	EzS-PD-60 series	EzS-PD-86 series
Input Voltage		24VDC±10%			40~70VDC
Control Method		Closed loop control with 32bit DSP			
Current Consumption		Max 500mA (Except motor current)			
Operating Condition	Ambient Temperature	In Use : 0~50℃ In Storage : -20~70℃			
	Humidity	In Use : 35~85% (Non-Condensing) In Storage : 10~90% (Non-Condensing)			
	Vib. Resist.	0.5G			
Function	Rotation Speed	0~3,000rpm			
	Resolution(P/R)	10,000/Rev. Encoder model : 500 1,000 1,600 2,000 3,600 5,000 6,400 7,200 10,000 20,000/Rev. Encoder model : 500 1,000 1,600 2,000 3,600 5,000 6,400 7,200 10,000 20,000 32,000/Rev. Encoder model : 500 1,000 1,600 2,000 3,600 5,000 6,400 7,200 10,000 32,000 (Selectable with Rotary Switch)			
	Max. Input Pulse Frequency	500KHz (Duty 50%)			
	Protection Functions	Over current, Over speed, Position tracking error, Over load, Over temperature, Over regenerated voltage, Motor connect error, Encoder connect error, Motor voltage error, In-Position error, System error, ROM error, Input voltage error, Position overflow error			
	LED Display	Power status, Alarm status, In-Position status, Servo On status			
	In-Position Selection	0~F (Selectable with Rotary switch)			
	Position Gain Selection	0~F (Selectable with Rotary switch)			
	Pulse Input Method	1-Pulse / 2-Pulse (Selectable with DIP switch)			
	Rotational Direction	CW / CCW (Selectable with DIP switch)			
	Speed/Position Control Command	Pulse train input			
I/O Signal	Input Signals	Position command pulse, Servo On/Off, Alarm reset (Photocoupler input)			
	Output Signals	In-Position, Alarm (Photocoupler output) Encoder signal (A+, A-, B+, B-, Z+, Z-, 26C31 of Equivalent) (Line Driver output)			

● Position Controller Embedded Drive Dimension (mm)

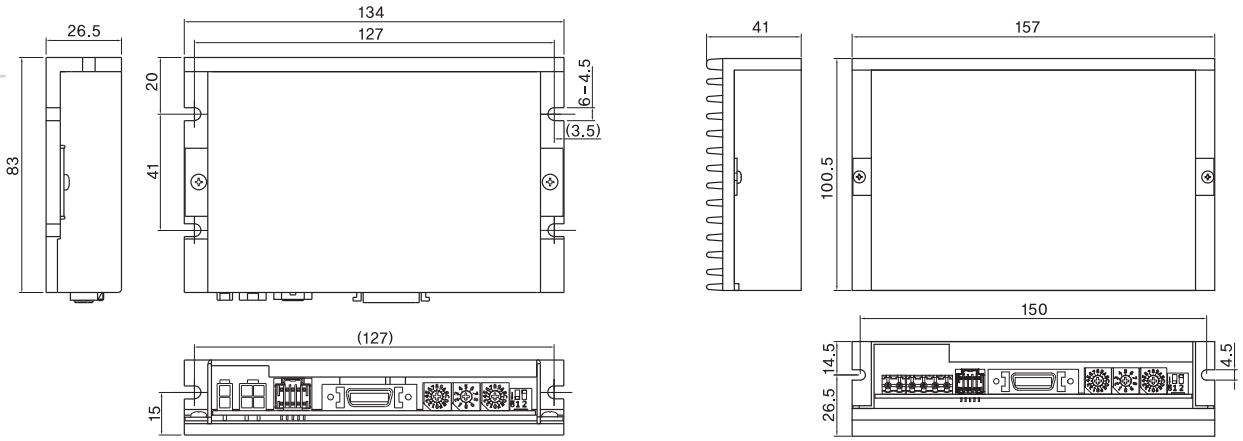

※Drive only for 86mm motor (EzS-PD-86 Series)

● Mini Type Position Controller Embedded Drive Dimension (mm)

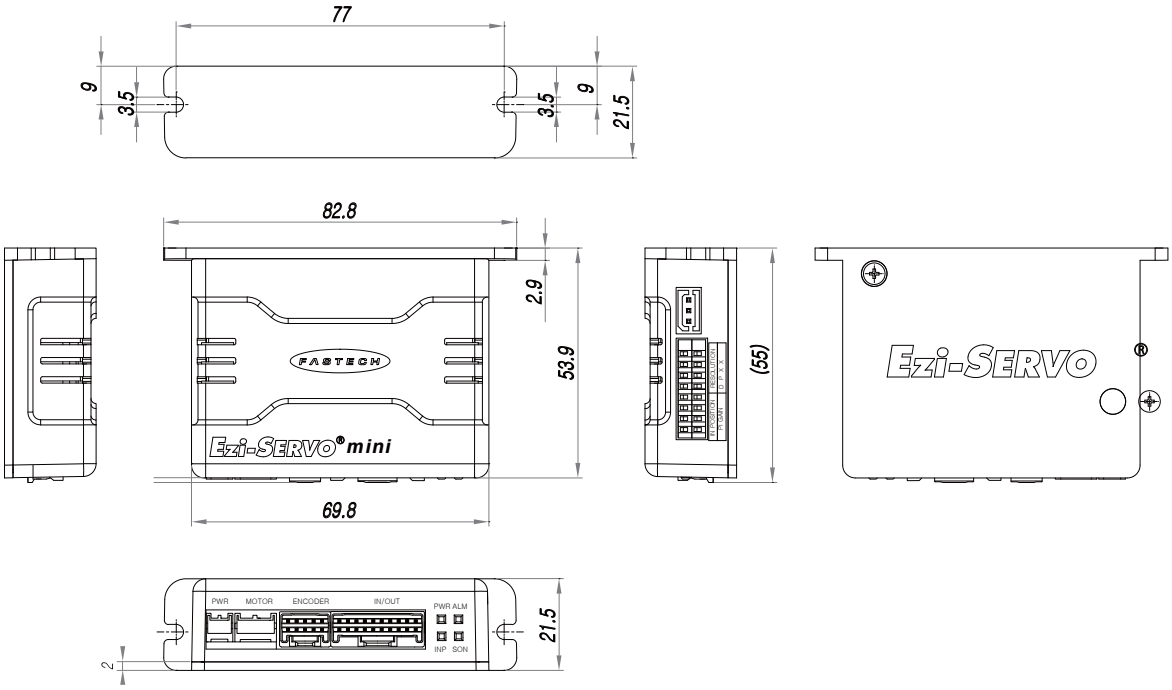

● Position Controller Embedded Drive Dimension

Motor Model		EzM-42 series	EzM-56 series	EzM-60 series	EzM-86 series
Driver Model		EzS-NDR-42 series	EzS-NDR-56 series	EzS-NDR-60 series	EzS-NDR-86 series
Input Voltage		24VDC±10%			40~70VDC
Control Method		Closed loop control with 32bit DSP			
Multi Axes Drive		Maximum 16 axes through Daisy-Chain			
Position Table		256 motion command steps (Continuous, Wait, Loop, Jump and External start etc.)			
Current Consumption		Max 500mA (Except motor current)			
Operating Condition	Ambient Temperature	In Use : 0~50℃ In Storage : -20~70℃			
	Humidity	In Use : 35~85% (Non-condensing) In Storage : 10~90% (Non-condensing)			
	Vib. Resist.	0.5G			
Function	Rotation Speed	0~3,000rpm			
	Resolution(P/R)	10,000/Rev. Encoder model : 500 1,000 1,600 2,000 3,600 5,000 6,400 7,200 10,000 20,000/Rev. Encoder model : 500 1,000 1,600 2,000 3,600 5,000 6,400 7,200 10,000 20,000 32,000/Rev. Encoder model : 500 1,000 1,600 2,000 3,600 5,000 6,400 7,200 10,000 32,000 (The Resolution set by Parameter)			
	Protection Functions	Over current, Over speed, Position tracking error, Over load, Over temperature, Over regenerated voltage, Motor connect error, Encoder connect error, Motor voltage error, In-Position error, System error, ROM error, Input voltage error, Position overflow error			
	LED Display	Power status, Alarm status, In-Position status, Servo On status			
	In-Position Selection	0~15 (Selectable by parameter)			
	Position Gain Selection	0~15 (Selectable by parameter)			
	Rotational Direction	CW / CCW (Selectable by parameter)			
I/O Signal	Input Signal	3 dedicated input (LIMIT+, LIMIT-, ORIGIN), 9 programmable input (Photocoupler)			
	Output Signal	1 dedicated output (Compare Out), 9 programmable output (Photocoupler), Brake signal			
Communication Interface		The RS-485 serial communication with PC Transmission speed : 9,600~921,600bps			
Position Control		Incremental mode / Absolute mode Data Range : -134,217,727 to +134,217,727pulse, Operating speed : Max. 3,000rpm			
Return to Origin		Origin Sensor, Z phase, ±Limit sensor, Torque			
GUI		User Interface Program within Windows			
Software		Motion Library (DLL) for windows 2000/XP			

● Position Controller Embedded Drive Dimension (mm)

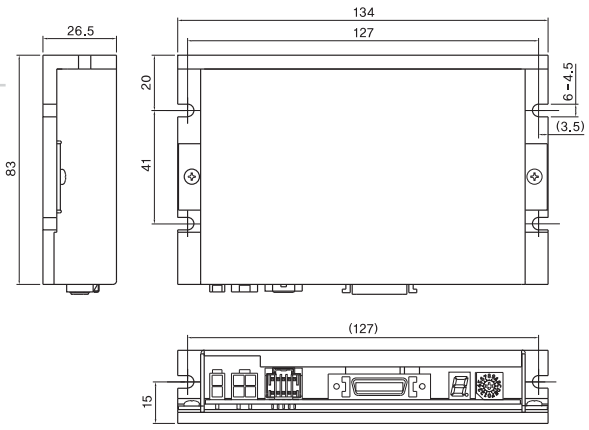

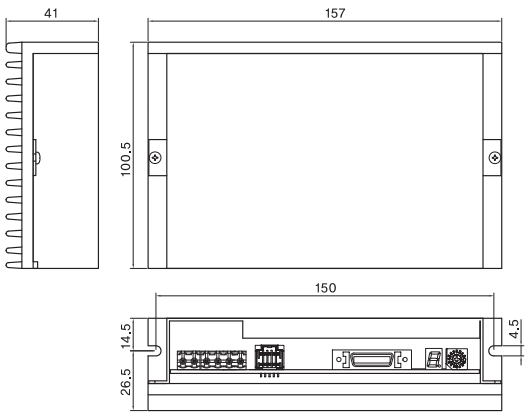

※Drive only for 86mm motor (EzS-PD-86 Series)

● Drive Controller Embedded Mini Plus-R Type Size (mm)

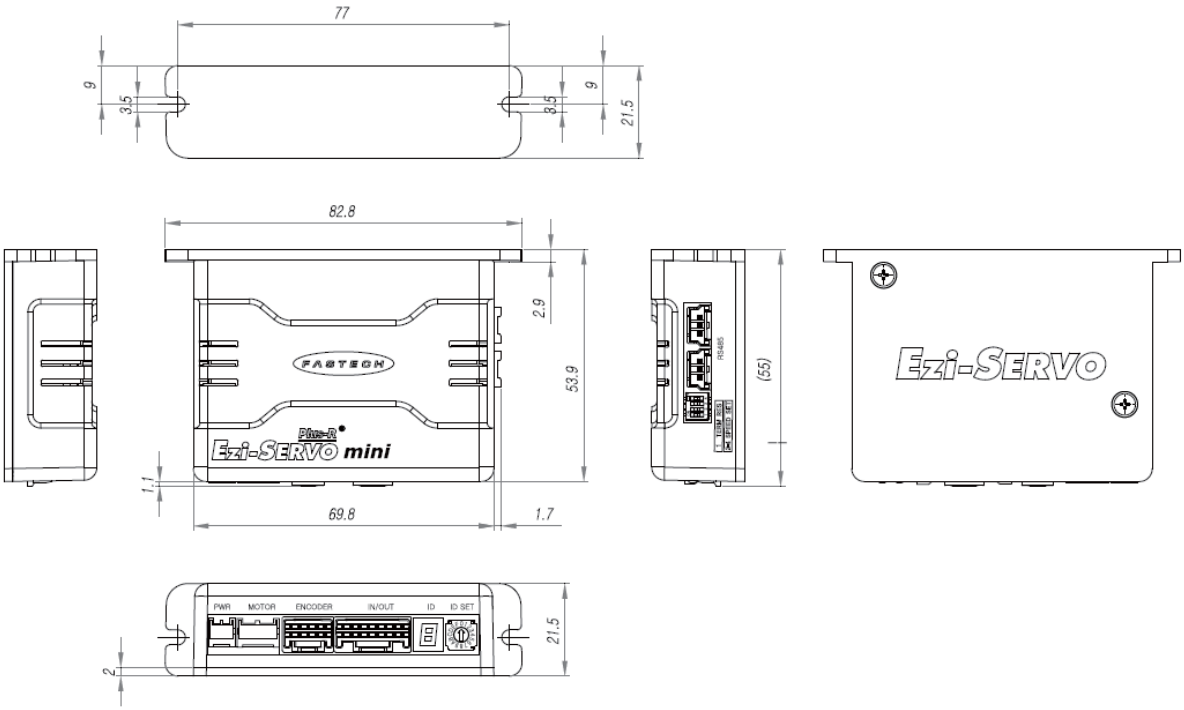

● Motor Specification (Pulse Input and Position Controller Embedded Drive)

Model	Unit	EzM-42XL-A	EzM-56L-A	EzM-60L-A	EzM-86M-A	EzM-86L-A
Drive Method	-	Bi-Polar	Bi-Polar	Bi-Polar	Bi-Polar	Bi-Polar
Number of Phase	-	2	2	2	2	2
Voltage	VDC	7.2	2.7	2.6	2.4	4.38
Current per Phase	A	1.2	3	4	6	6.0
Resistance per Phase	Ohm	6	0.9	0.65	0.4	0.73
Inductance per Phase	mH	15.6	3.8	2.5	3.5	8.68
Holding Torque	N · m	0.65	1.5	2.5	4.0	9.0
Rotor Inertia	g · cm2	114	480	800	1400	4000
Weight	g	500	1150	1600	2.3	5.3
Length	mm	59	80	90	79	155
Allowable Thrust Load	N	Lower than motor weight				
Insulation Resistance	Mohm	100min (at 500VDC)				
Insulation Class	-	Class B				
Operating Temperature	℃	0 to 55				

● Motor Torque Characteristic (Pulse Input and Position Controller Embedded Drive)

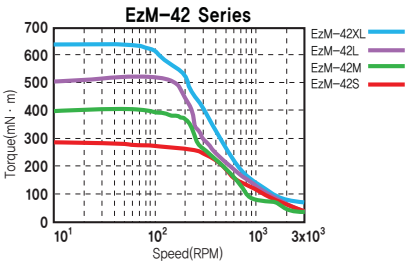

※ Measurement Condition
Motor voltage = 40VDC
Motor current = Rated Current
(please refer Motor Specification above)
Drive = Ezi-SERVO Plus-R

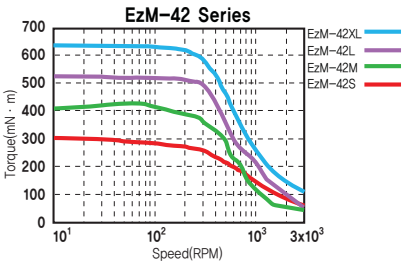

※ Measurement Condition
Motor voltage = 40VDC
Motor current = Rated Current
(please refer Motor Specification above)
Drive = Ezi-SERVO Plus-R

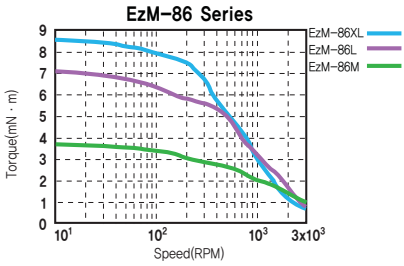

※ Measurement Condition
Motor voltage = 40VDC
Motor current = Rated Current
(please refer Motor Specification above)
Drive = Ezi-SERVO Plus-R

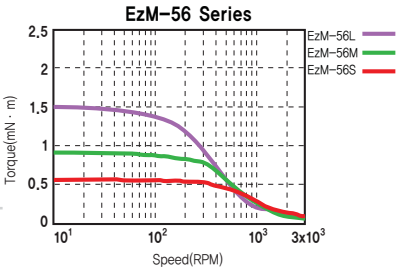

※ Measurement Condition
Motor voltage = 40VDC
Motor current = Rated Current
(please refer Motor Specification above)
Drive = Ezi-SERVO

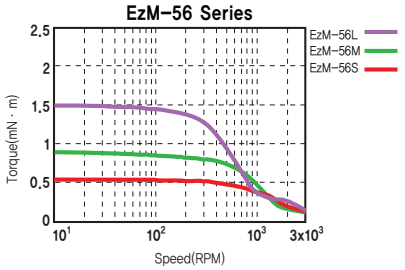

※ Measurement Condition
Motor voltage = 40VDC
Motor current = Rated Current
(please refer Motor Specification above)
Drive = Ezi-SERVO

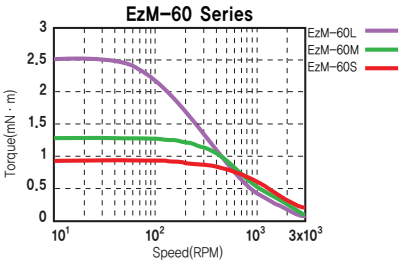

※ Measurement Condition
Motor voltage = 40VDC
Motor current = Rated Current
(please refer Motor Specification above)
Drive = Ezi-SERVO Plus-R

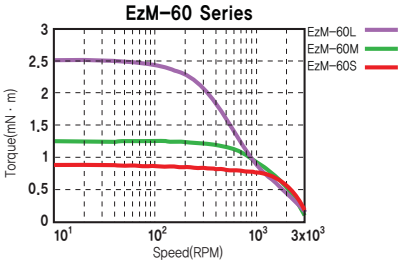

※ Measurement Condition
Motor voltage = 40VDC
Motor current = Rated Current
(please refer Motor Specification above)
Drive = Ezi-SERVO Plus-R

● Set-up and Operation of the Pulse Input Drive

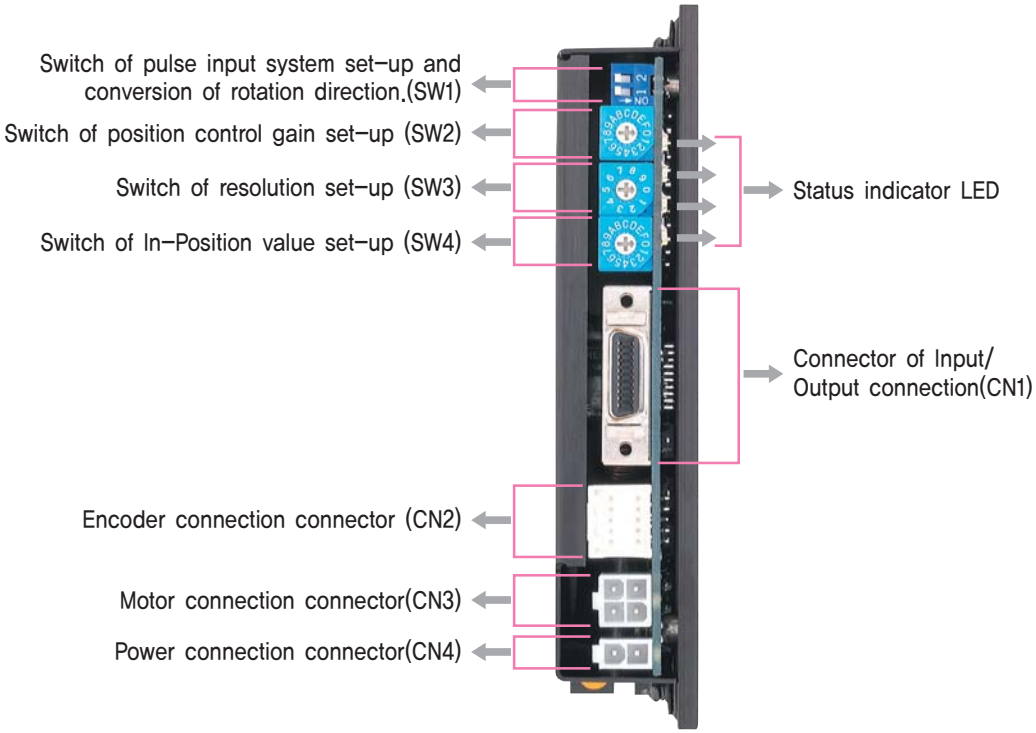

◆ 86mm Motor Exclusive Drive(EzS-PD-86 Seris)

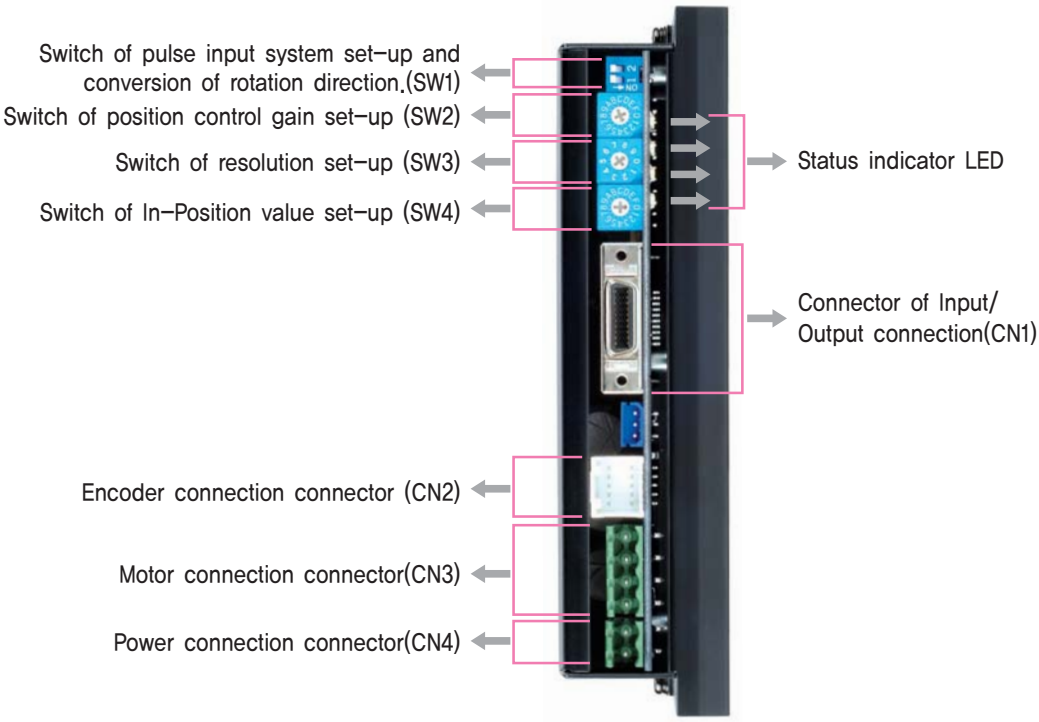

1. Status Indicator LED

Display	Color	Functions	ON/OFF Condition
PWR	Green	Power Supplied	Lights up when the power is on
INP	Yellow	Positioning Completion Signal	Lights up when complete position command pulse and position deviation from target position is located within the sep up value to rotary switch
SON	Orange	Servo On/Off Status Display	Servo on: Lights up Servo Off: Lights off
ALM	Red	Alarm Display	Flash when protection function is activated (Identifiable which protection mode is activated by counting the blinking times)

◆ Content and number of protection function

Times	Protection function	Condition
1	Over Current Error	The current through a motor-driven device exceeds the limit value
2	Over Speed Error	Motor speed exceed 3000rpm
3	Position Tacking Error	Difference between position command and the actual position is more than 90 while motor rotation
4	Over Load Error	The load bigger than maximum torque of motor is applied more than 5seconds
5	Over Temperature Error	Internal temperature is over 85degree
6	Regenerative Over Voltage Error	Back-EMF of the motor exceeds the limit value*1
7	Motor Connection Error	There is an connection error between motor and drive
8	Encoder Connection Error	There is an connection error between drive and motor
9	Motor Voltage Error	If the motor supply voltage is less than the lower limit*2
10	In-Position Error	After complete operation, position error (More than 1) is occurred more than 3 seconds
11	System Error	An error occurred at drive system (Watch Dog Timer)
12	ROM Error	An error occurred at parameter recorder (ROM)
14	Input Voltage Error	Input voltage break from rated voltage*3
15	Over Position Error	At motor stopped statue, position error occurred more than 90degree

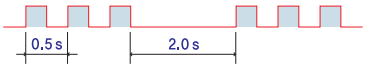

Alarm LED flash
(ex : Position tracking error)

*1 : The limitation value of Back-EMF is different per motor. (Please refer to manual)
*2 : The lower limit value of supplied voltage is different per motor and drive. (Please refer to manual)
*3 : Rated voltage which is supplied to the drive is different per drive. (Please refer to manual)

2. Pulse Input System Setting Switch (SW1.1)

Display	Name of switch	Functions
2P/1P	Choice of pulse input mode	Can choose between 1-pulse mode or 2-pulse mode. ON: 1-Pulse input mode OFF: 2-Pulse input mode ※Set-up as 2-pulse mode when manufactured

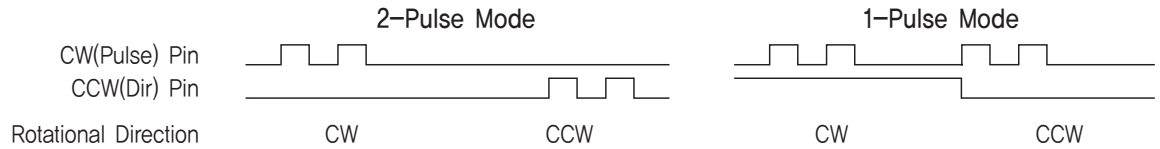

3. Rotation Direction Convert Switch (SW1.2)

Display	Name of switch	Functions
DIR	Rotation direction convert switch (SW1.2)	CW input standard to Drive. ON: CCW(-direction) OFF: CW(+direction) ※Set-up as CW when manufactured

Direction Selection Switch : ON

CCW direction

Direction Selection Switch : OFF

CW direction

4. Resolution Setting Switch (SW3)

Refers to the number of input pulses per revolution which is sent from the host controller.

Position	Pulse/Rotation	Position	Pulse/Rotation
0	500*1	5	3,600
1	500	6	5,000
2	1,000	7	6,400
3	1,600	8	7,200
4	2,000	9	10,000*2

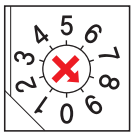

*1 : Resolution value depend on encoder type.
*2 : Default = 10,000

5. Position Control Gain Setting Switch (SW2)

To adjust the response of the motor according to the load on the motor after motor stopped. Can be achieved quick and stabilized performance by adjusting the switch depending on the load of the motor.

–Set up procedures as following

1. Nominate switch to '0'
2. Turning the switch until motor response is settled.
3. From the current rotary switch position, adjust by moving switch to +,– position at 1 or 2 stages.

Position	Integral Part of the time constant	Proportional Gain*1
0	1	1
1	1	2
2	1	3
3*2	1	4
4	1	5
5	1	6
6	2	1
7	2	2
8	2	3
9	2	4
A	2	5
B	3	1
C	3	2
D	3	3
E	3	4
F	3	5

*1 : The gain value is a relative value rather than the actual values that used in internal drive.
*2 : Gain switch setting is 3 when manufactured.

6. In–Position Value Setting Switch (SW4)

Indicates the output condition of the positioning complete signal. Output the positioning complete signal when position deviation from the demand position is less than In–position value after completion of the position command.

Position	In–Position Value[Pulse] Fast Response	Position	In–Position Value[Pulse] Accurate Response
0*1	0	8	0
1	1	9	1
2	2	A	2
3	3	B	3
4	4	C	4
5	5	D	5
6	6	E	6
7	7	F	7

*1 : Setting value is '0' when manufactured.
※Please refer to manual to find how to setting.

7. Encoder Connection Connector(CN2)

NO.	Functions	I/O
1	A+	Input
2	A–	Input
3	B+	Input
4	B–	Input
5	Z+	Input
6	Z–	Input
7	5VDC	Output
8	5VDC GND	Output
9	F. GND	----
10	F. GND	----

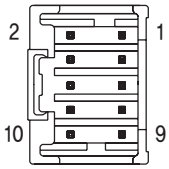

8. Input/Output Connection Connector (CN1)

NO.	Functions	I/O
1	CW+(Pulse+)	Input
2	CW–(Pulse–)	Input
3	CCW+(Dir+)	Input
4	CCW–(Dir–)	Input
5	A+	Output
6	A–	Output
7	B+	Output
8	B–	Output
9	Z+	Output
10	Z–	Output
11	Alarm	Output
12	In–Position	Output
13	Servo On/Off	Input
14	Alarm Reset	Input
15	NC	----
16	BRAKE+	Output
17	BRAKE–	Output
18	S–GND	Output
19	24VDC GND	Input
20	24VDC	Input

※Brake function is optional.
※86mm Drive for motor has no Brake function.

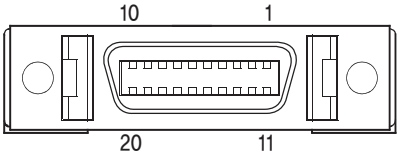

9. Motor Connection Connector(CN3)

NO.	Functions
1	A Phase
2	B Phase
3	/A Phase
4	/B Phase

NO.	Functions
1	/B Phase
2	B Phase
3	/A Phase
4	A Phase

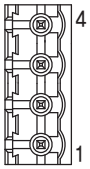

※For 86mm drive

10. Power Connection Connector(CN4)

NO.	Functions
1	24VDC ±10%
2	GND

NO.	Functions
1	GND
2	40~70VDC

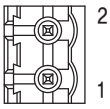

※For 86mm drive

● Pulse Input Drive System Configurations

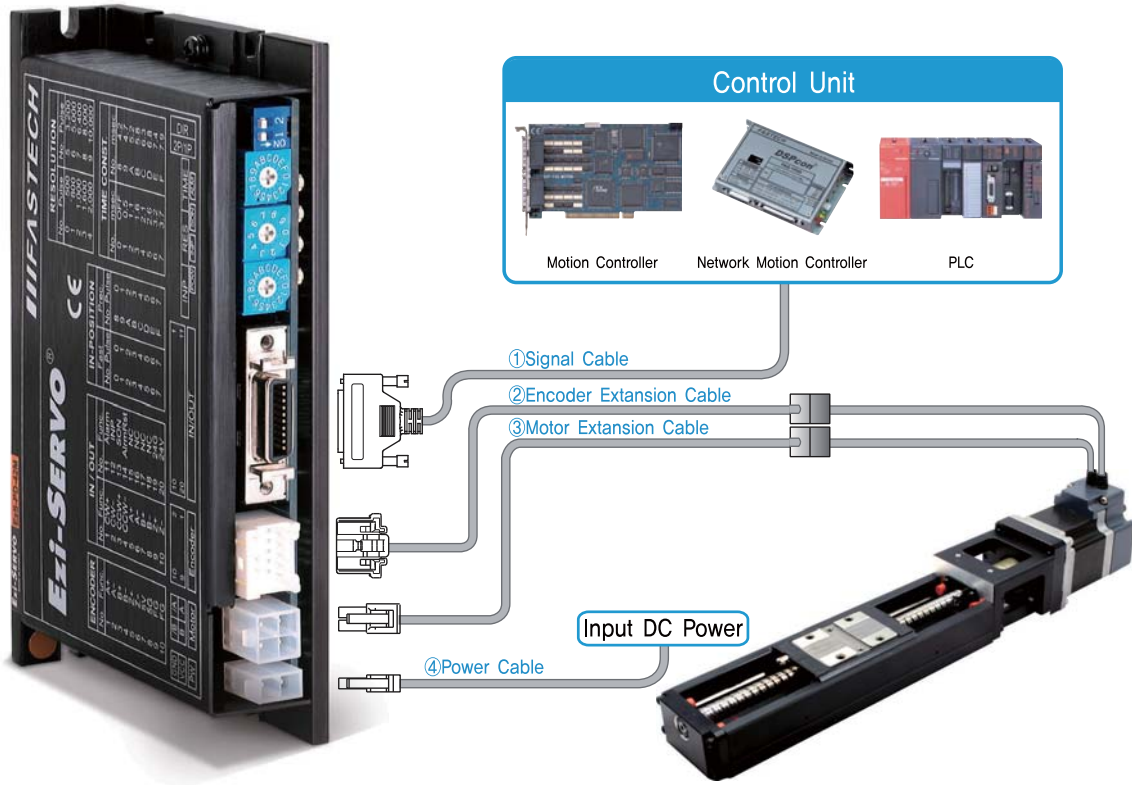

Type	Signal Cable	Encoder Cable	Motor Cable	Power Cable
Standard Length	–	30cm	30cm	–
Max. Length	20m	20m	20m	2m

1. Cable Option

①Signal Cable

Cable for connect between Ezi-SERVO drive and controller.

Item	Length[m]	Remark
CSVO-S-□□□F CSVO-S-□□□M	□□□ □□□	Normal Cable Robot Cable

□ is for Cable Length. The unit is 1m and Max. 20m length.

②Encoder Extension Cable

extension cable for connect between Ezi-SERVO drive and encoder.

Item	Length[m]	Remark
CSVO-E-□□□F CSVO-E-□□□M	□□□ □□□	Normal Cable Robot Cable

□ is for Cable Length. The unit is 1m and Max. 20m length.

③Motor Extension Cable

extension cable for connect between Ezi-SERVO drive and motor.

Item	Length[m]	Remark
CSVO-M-□□□F CSVO-M-□□□M	□□□ □□□	Normal Cable Robot Cable

□ is for Cable Length. The unit is 1m and Max. 20m length.

④Power Cable

cable for connect between Ezi-SERVO drive and power point.

Item	Length[m]	Remark
CSVO-P-□□□F CSVO-P-□□□M	□□□ □□□	Normal Cable Robot Cable

□ is for Cable Length. The unit is 1m and Max. 20m length.

● Pulse Heat Input of the Drive System Configuration (86mm Motors)

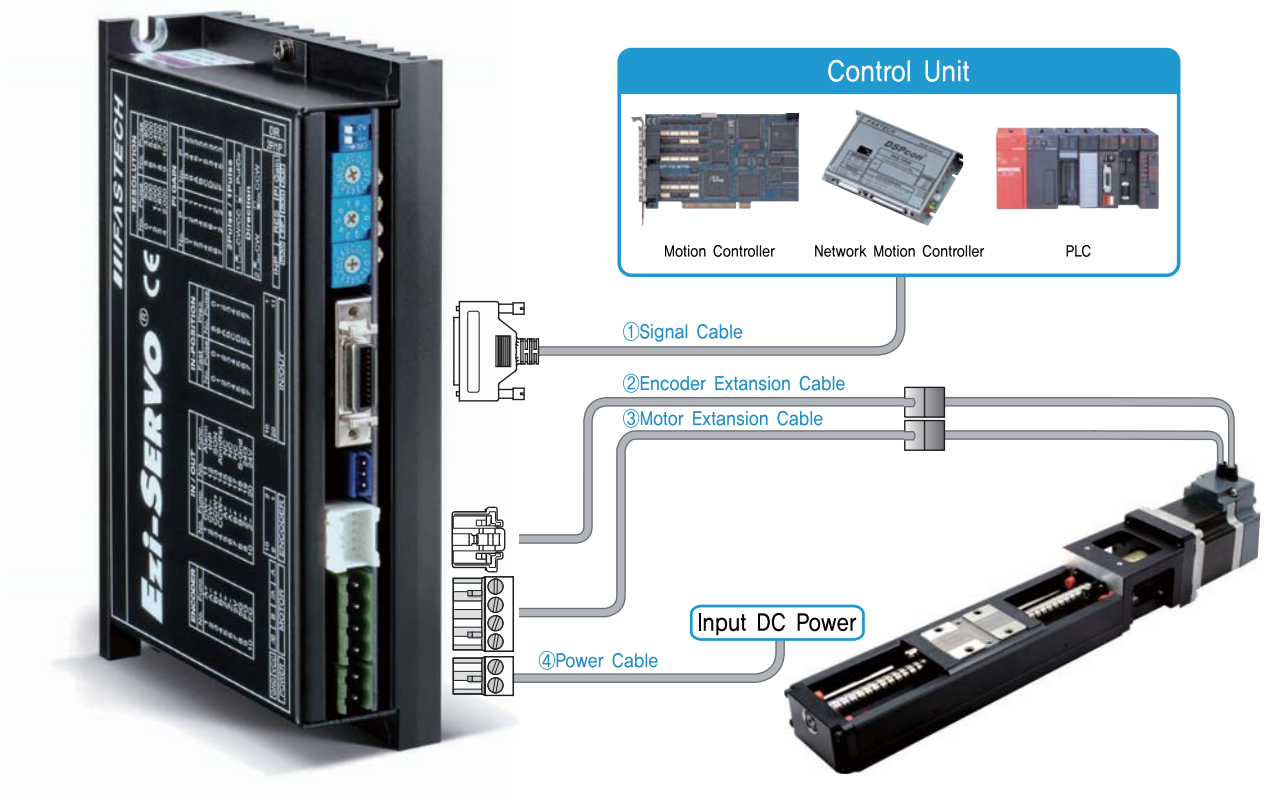

Type	Signal Cable	Encoder Cable	Motor Cable	Power Cable
Standard Length	–	30cm	30cm	–
Max. Length	20m	20m	20m	2m

1. Cable Option

①Signal Cable

Cable for connect between Ezi-SERVO drive and controller.

Item	Length[m]	Remark
CSVO-S-□□□F CSVO-S-□□□M	□□□ □□□	Normal Cable Robot Cable

□ is for Cable Length. The unit is 1m and Max. 20m length.

②Encoder Extension Cable

extension cable for connect between Ezi-SERVO drive and encoder.

Item	Length[m]	Remark
CSVO-E-□□□F CSVO-E-□□□M	□□□ □□□	Normal Cable Robot Cable

□ is for Cable Length. The unit is 1m and Max. 20m length.

③Motor Extension Cable

extension cable for connect between Ezi-SERVO drive and motor.

Item	Length[m]	Remark
CSVP-M-□□□F CSVP-M-□□□M	□□□ □□□	Normal Cable Robot Cable

□ is for Cable Length. The unit is 1m and Max. 20m length.

④Power Cable

cable for connect between Ezi-SERVO drive and power point.

Item	Length[m]	Remark
CSVP-P-□□□F CSVP-P-□□□M	□□□ □□□	Normal Cable Robot Cable

□ is for Cable Length. The unit is 1m and Max. 20m length.

● Pulse Input Drive External Configuration

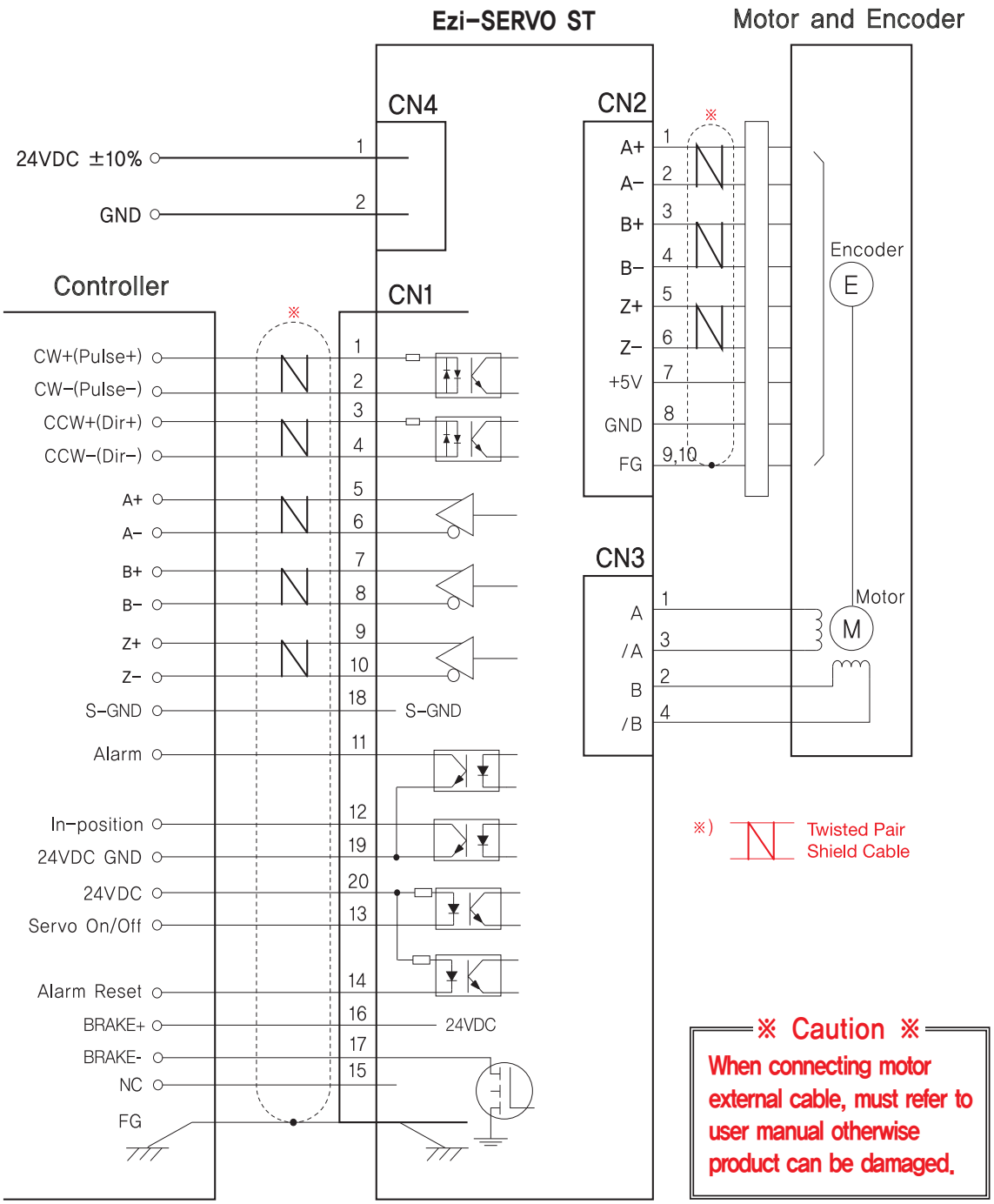

※ Caution ※

When connecting motor external cable, must refer to user manual otherwise product can be damaged.

● Pulse Input Drive External Configuration(86 Motor)

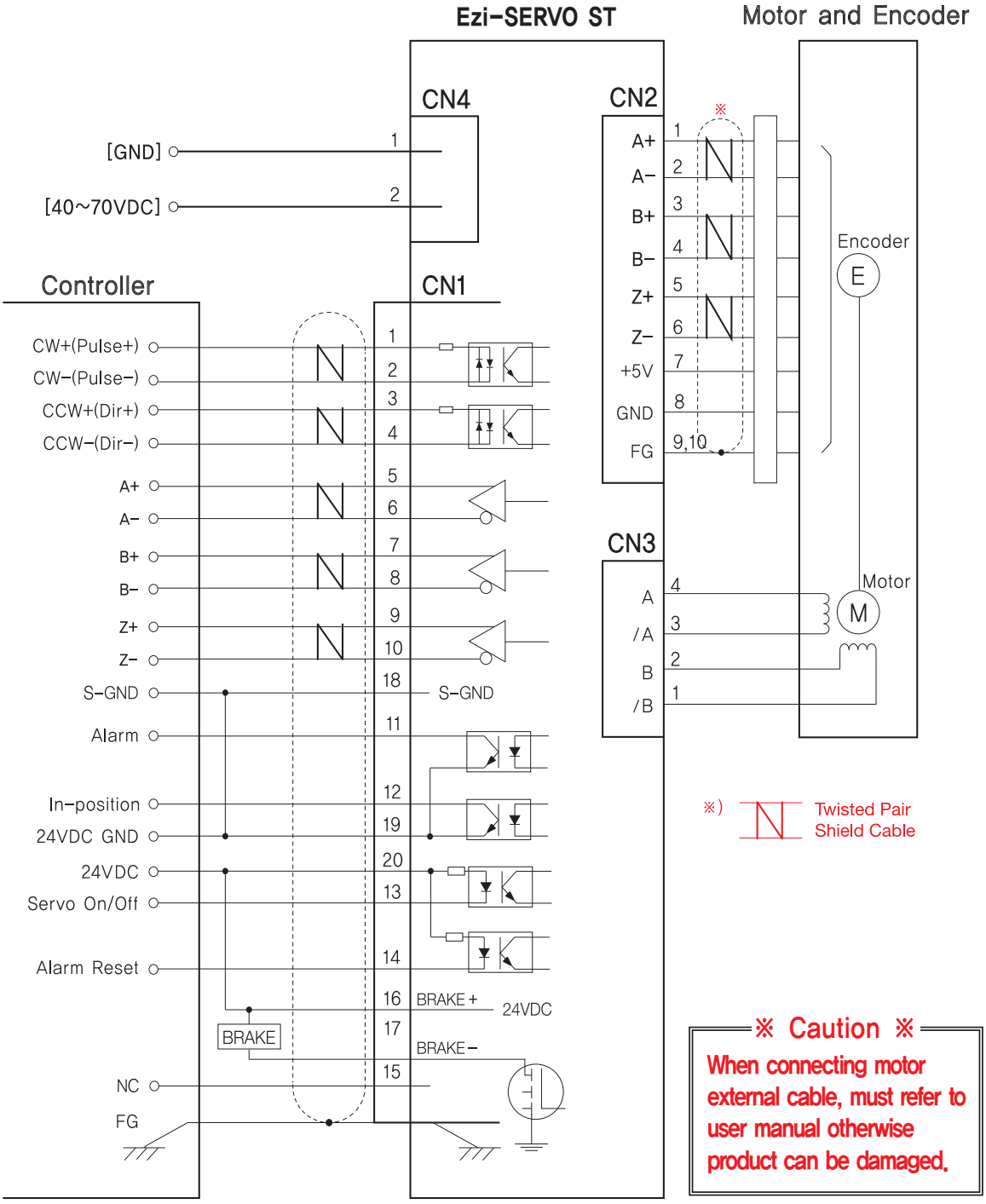

※ Caution ※

When connecting motor external cable, must refer to user manual otherwise product can be damaged.

● Explanation of Control Input/Output of Pulse Input Drive

1 Input Signal

Input signals of the drive are all photocoupler protected. The signal shows the status of internal photocouplers [ON: conduction], [OFF: Non-conduction], not displaying the voltage levels of the signal.

CW(Pin:1,2), CCW(Pin:3,4)

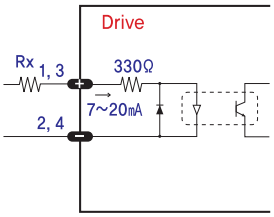

Alarm Reset(Pin:14)
Servo On/Off(Pin:13)

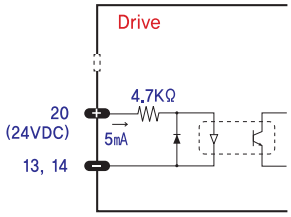

◆ Servo On/Off Input

Drive stop to supply the current to motor when Servo On/Off signal is [ON]. It became motor free statue so device controlled by motor can be adjusted by hand. When Servo On/off signal is [off], drive supply the current to motor so holding torque is recovered. When operating motor have to set-up as [OFF].

◆ Alarm Reset Input

Off the Alarm output of the Drive which is protection function is on. When Alarm Reset input is [ON] Alarm output will be off. Need to eliminate the cause of Alarm before off the Alarm output. Even Alarm Reset input is [ON] drive does not operate correctly before remove the cause of the Alarm.

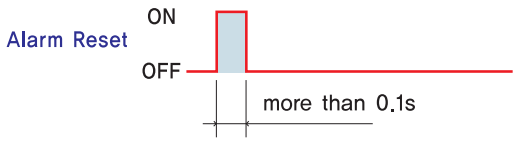

※Alarm Reset input is recognize the Drive input at the same statue as the above picture.

◆ Position Pulse Commends Input

It is input of receiving position pulse commend from motion controller which is operated by user and can choose input mode between 2-pulse input mode and 1-pulse input mode. (Please refer to 'Pulse input mode setting switch (SW1.1) to find choice of position pulse commends input) CW, CCW input circuits were designed based on the 5V. Connect directly without using resistance Rx if CW, CCW input signal voltage is 5V. If CW, CCW input signal voltage is higher than 5V, need additional Rx. Internal circuits will be damaged if resistance is not added so have to use after add resistance. It is suitable to use 680ohm when input signal voltage is 12V and 1.8Kohm when input signal voltage is 24V.

2 Output Signal

Output signals from the driver are photocoupler protected: Alarm, In-Position and the Line Driver Outputs (encoder signal). In the case of photocoupler outputs, the signal indicates the status of internal photocouplers [ON: conduction], [OFF: Non-conduction], not displaying the voltage levels of the signal.

Alarm(Pin:11), In-Position(Pin:12)

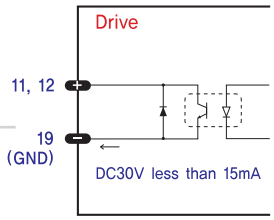

Encoder Signal
(Pin:5,6,7,8,9,10)

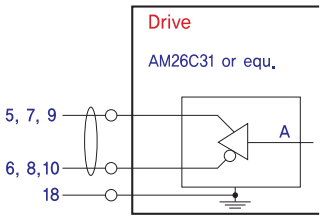

◆ In-Position Output

It is used for send movement of the motor to upper controller. In-position output is [ON] when operation of motor is stop. In-Position output become [ON] when motor stopped within position deviation that set-up by switch of position deviation selection (SW4)

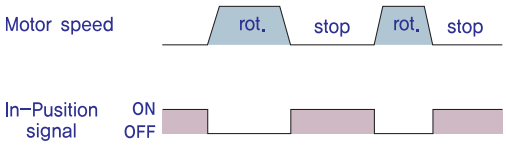

◆ Alarm Output

Alarm output is [ON] at normal state, and [OFF] at under protection. Motor operation commend is stopped by detection of Alarm signal from upper controller which is controlled by user.
If any problem occurred such as over load and over current while motor operating, drive will detect the problem and cut off the power supply. Also, inform the problem by flickering of Alarm LED at the same time as the alarm output is [OFF].

[Caution] Only at the Alarm output port, the photocoupler isolation is in reverse. When the driver is in normal operation the Alarm output is [ON]. On the contrary when the driver is in abnormal operation that start protection mode, the Alarm output is [OFF].

◆ Encoder Output

Encoder Output signal is Line drive Output(Nearly 26C31)
Please using for check stop position of motor.

● Setting and Operation of Mini Type Pulse Input Drive

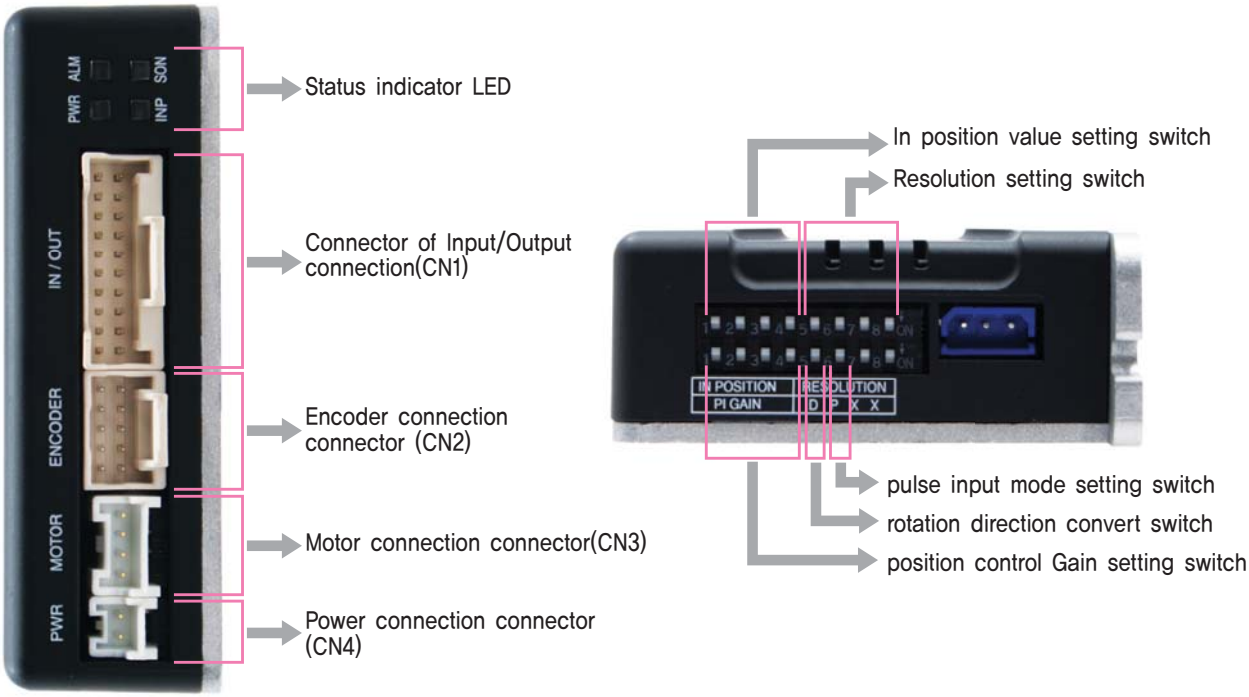

1. Status Indicator LED

Display	Color	Function	ON/OFF Condition
PWR	Green	Power Supplied	Lights up when the power is on
INP	Green	Positioning Completion Signal	Lights up when complete position command pulse and position deviation from target position is located within the sep up value to rotary switch
SON	Orange	Positioning Completion Signal	Servo on: Lights up Servo Off: Lights off
ALM	Red	Alarm Display	Flash when protection function is activated (Identifiable which protection mode is activated by counting the blinking times)

◆ Protection functions and LED flash times

Times	Protection	Conditions
1	Over Current Error	The current through a motor-driven device exceeds the limit value
2	Over Speed Error	Motor speed exceed 3000rpm
3	Position Tacking Error	Difference between position command and the actual position is more than 90 while motor rotation
4	Over Load Error	The load bigger than maximum torque of motor is applied more than 5seconds
5	Over Temperature Error	Internal temperature is over 85 degree
6	Regenerative Over Voltage Error	Back-EMF of the motor exceeds the limit value
7	Motor Connection Error	There is an connection error between motor and drive
8	Encoder Connection Error	There is an connection error between drive and motor
9	Motor Voltage Error	If the motor supply voltage is less than the lower limit
10	In-Position Error	After complete operation, position error (More than 1) is occurred more than 3 seconds
11	System Error	An error occurred at drive system (Watch Dog timer)
12	ROM Error	An error occurred at parameter recorder (ROM)
15	Over Position Error	At motor stopped statue, position error occurred more than 90degree

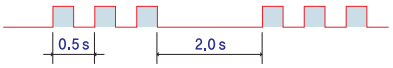

Alarm LED flash
(ex : Position tracking error)

2. Pulse Input Mode Setting Switch

Display	Name of switch	Functions
2P/1P	Selection of pulse input mode	Can choose between 1-pulse mode or 2-pulse mode ON: 1-Pulse input mode OFF: 2-Pulse input mode ※Set to 2-pulse mode when manufactured

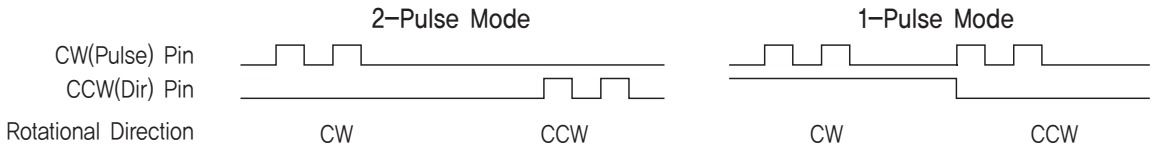

3. Rotational Direction Selection Switch

Display	Name of switch	Functions
DIR	Switching Rotational Direction	Based on CW(+Dir signal) input to driver. ON : CCW(-Direction) OFF : CW(+Direction) ※Default : CW mode

Direction selection switch : ON

CCW direction

Direction selection switch : OFF

CW direction

4. Resolution Selection Switch

The Number of Pulse Per Revolution.

Switch Position				Pulse/ Revolution	Switch Position				Pulse/ Revolution
8	7	6	5		8	7	6	5	
ON	ON	ON	ON	4,000 or 16,000*1	OFF	ON	ON	ON	7,200
ON	ON	ON	OFF	500	OFF	ON	ON	OFF	10,000*2
ON	ON	OFF	ON	1,000	OFF	ON	OFF	ON	NC
ON	ON	OFF	OFF	1,600	OFF	ON	OFF	OFF	NC
ON	OFF	ON	ON	2,000	OFF	OFF	ON	ON	NC
ON	OFF	ON	OFF	3,600	OFF	OFF	ON	OFF	NC
ON	OFF	OFF	ON	5,000	OFF	OFF	OFF	ON	NC
ON	OFF	OFF	OFF	6,400	OFF	OFF	OFF	OFF	NC

*1 : Resolution value depend on encoder type.(Refer to the Manual)
*2 : Default = 10,000

5. Position Controller Gain Selection Switch

The Position Controller Gain Switch allows for the correction of the motor position deviation after stopping caused by load and friction. Depending on the motor load, the user may have to select a different gain position to stabilize and to correct positional error quickly.

-To tune the controller

1. Set the switch to "ON" position.
2. Start to rotate the switch until system becomes stable.
3. Rotate the switch 1~2 position to reach better performance.

Switch Position				Time Constant of the Integral part	Proportional Gain*1
4	3	2	1		
ON	ON	ON	ON	1	1
ON	ON	ON	OFF	1	2
ON	ON	OFF	ON	1	3
ON	ON	OFF	OFF	1	4*2
ON	OFF	ON	ON	1	5
ON	OFF	ON	OFF	1	6
ON	OFF	OFF	ON	2	1
ON	OFF	OFF	OFF	2	2
OFF	ON	ON	ON	2	3
OFF	ON	ON	OFF	2	4
OFF	ON	OFF	ON	2	5
OFF	ON	OFF	ON	3	1
OFF	OFF	ON	ON	3	2
OFF	OFF	ON	OFF	3	3
OFF	OFF	OFF	ON	3	4
OFF	OFF	OFF	OFF	3	5

*1 : Value in the columns are in relative units. They only show the parameter changes depending on the switch's position.
*2 : Default = ON ON OFF OFF

6. In-Position Value Setting Switch

To select the output condition of In-position signal. In-position output signal is generated when the pulse number of positional error is lower than selected In-position value set by this switch after positioning command is executed.

Switch Position				In-Position Value[Pulse]	Switch Position				In-Position Value[Pulse]
4	3	2	1	Fast Response	4	3	2	1	Fast Response
ON	ON	ON	ON	0*1	OFF	ON	ON	ON	0
ON	ON	ON	OFF	1	OFF	ON	ON	OFF	1
ON	ON	OFF	ON	2	OFF	ON	OFF	ON	2
ON	ON	OFF	OFF	3	OFF	ON	OFF	OFF	3
ON	OFF	ON	ON	4	OFF	OFF	ON	ON	4
ON	OFF	ON	OFF	5	OFF	OFF	ON	OFF	5
ON	OFF	OFF	ON	6	OFF	OFF	OFF	ON	6
ON	OFF	OFF	OFF	7	OFF	OFF	OFF	OFF	7

*1 : Default = 0
※Please refer to User Manual for setup.

7. Input/Output Signal(CN1)

NO.	Function	I/O
1	CW+(Pulse+)	Input
2	CW-(Pulse-)	Input
3	CCW+(Dir+)	Input
4	CCW-(Dir-)	Input
5	A+	Output
6	A-	Output
7	B+	Output
8	B-	Output
9	Z+	Output
10	Z-	Output
11	Alarm	Output
12	In-Position	Output
13	Servo On/Off	Input
14	Alarm Reset	Input
15	NC	----
16	BRAKE+	Output
17	BRAKE-	Output
18	S-GND	Output
19	24VDC GND	Input
20	24VDC	Input

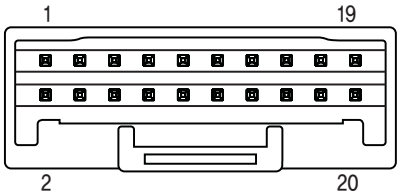

8. Encoder Connector(CN2)

NO.	Function	I/O
1	A+	Input
2	A-	Input
3	B+	Input
4	B-	Input
5	Z+	Input
6	Z-	Input
7	5VDC	Output
8	5VDC GND	Output
9	F. GND	----
10	F. GND	----

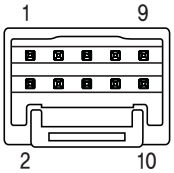

9. Motor Connector(CN3)

NO.	Function
1	B Phase
2	/B Phase
3	/A Phase
4	A Phase

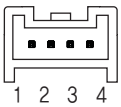

10. Power Connector(CN4)

NO.	Function
1	24VDC±10%
2	GND

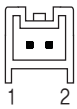

● Mini Type Pulse Input Drive System Configurations

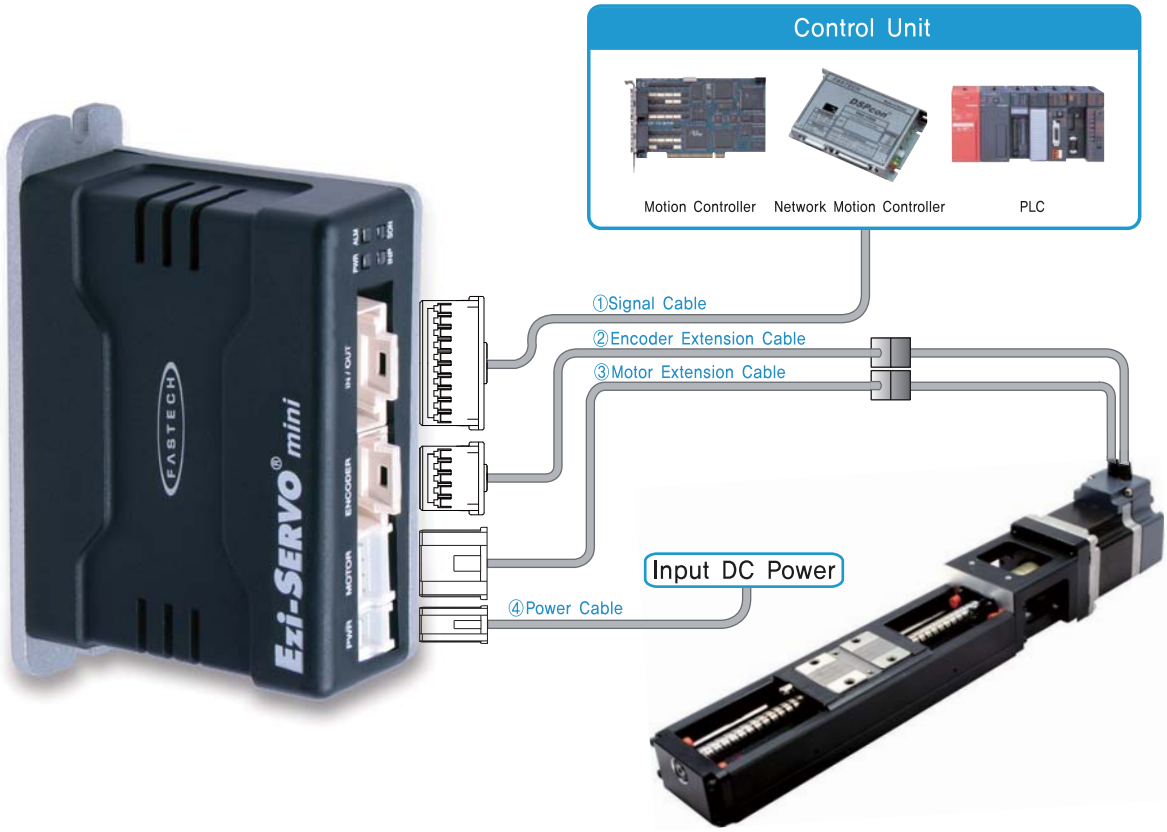

Type	Signal Cable	Encoder Cable	Motor Cable	Power Cable
Standard Length	–	30cm	30cm	–
Max. Length	20m	20m	20m	2m

1. Cable Option

①Signal Cable

Available to connect between Control System and Ezi-SERVO MINI.

Item	Length[m]	Remark
CSVI-S-□□□F	□□□	Normal Cable
CSVI-S-□□□M	□□□	Robot Cable

□ is for Cable Length. The unit is 1m and Max. 20m length.

②Encoder Extension Cable

Available to extended connection between Encoder and Ezi-SERVO MINI.

Item	Length[m]	Remark
CSVI-E-□□□F	□□□	Normal Cable
CSVI-E-□□□M	□□□	Robot Cable

□ is for Cable Length. The unit is 1m and Max. 20m length.

③Motor Extension Cable

Available to extended connection between motor and Ezi-SERVO MINI.

Item	Length[m]	Remark
CMNB-M-□□□F	□□□	Normal Cable
CMNB-M-□□□M	□□□	Robot Cable

□ is for Cable Length. The unit is 1m and Max. 20m length.

④Power Cable

Available to connect between Power and Ezi-SERVO MINI.

Item	Length[m]	Remark
CMNB-P-□□□F	□□□	Normal Cable
CMNB-P-□□□M	□□□	Robot Cable

□ is for Cable Length. The unit is 1m and Max. 20m length.

2. Connector for Cabling

Purpose	ITEM	Specification	Marker
Input and output connection (CN1)	Housing	501646-2000	MOLEX
	Terminal	501648-1000(AWG 26~28)	MOLEX
Encoder connection (CN2)	Housing	501646-1000	MOLEX
	Terminal	501648-1000(AWG 26~28)	MOLEX
Motor connection (CN3)	Housing	PAP-04V-S	JST
	Terminal	SPHD-001T-P0.5	JST
Power connection (CN4)	Housing	PAP-02V-S	JST
	Terminal	SPHD-001T-P0.5	JST

※These connectors are serviced together with Ezi-SERVO MINI except when purchasing option cables.
※Above connector is the most suitable product for Ezi-SERVO MINI. Another equivalent connector can be used.

● Mini Type Pulse Input Drive External Configuration

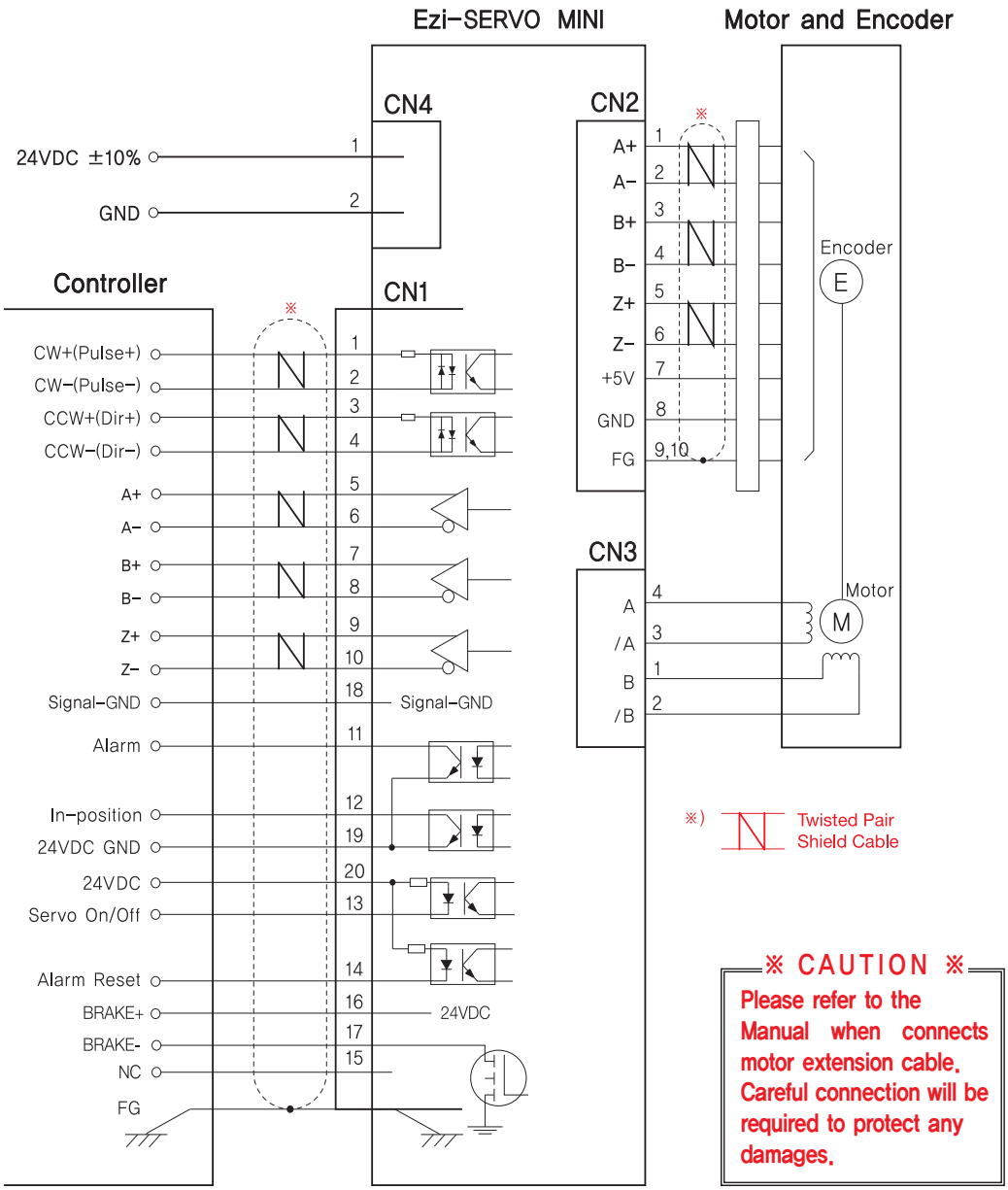

※ CAUTION ※

Please refer to the Manual when connects motor extension cable. Careful connection will be required to protect any damages.

● Position Controller Embedded Drive Setting and Operation

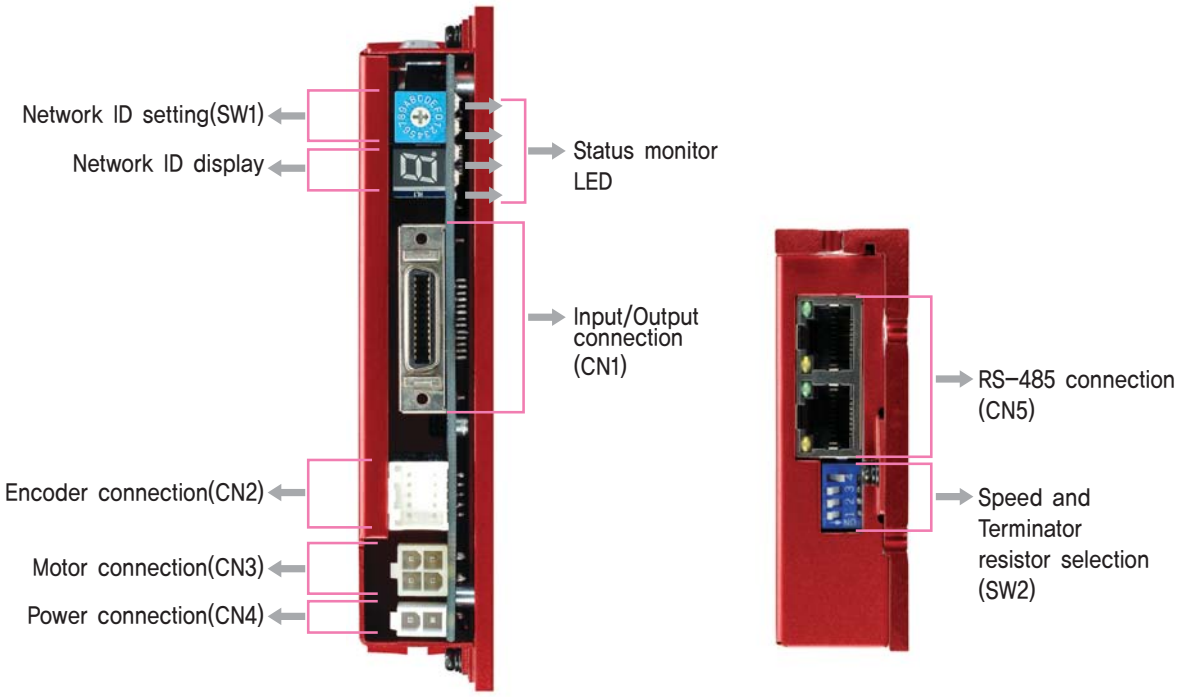

◆ 86mm Motor Drive Only(EzS-NDR-86 Series)

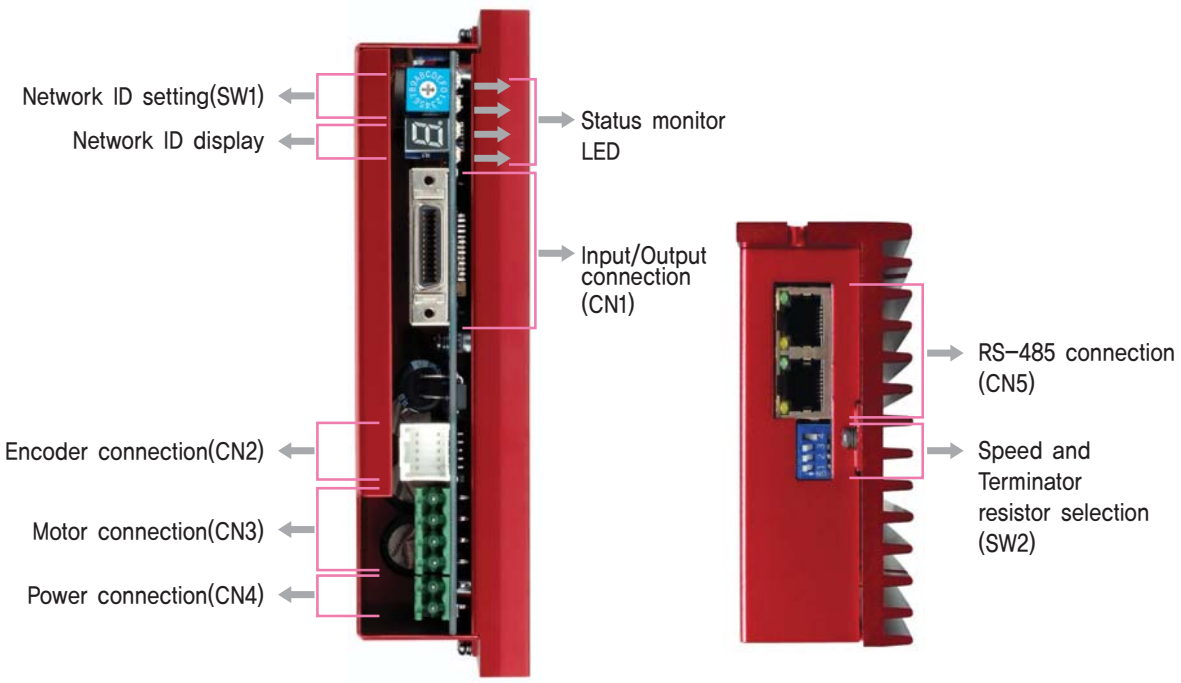

1. Status Monitor LED

Display	Color	Function	ON/OFF Condition
PWR	Green	Power Supplied	Lights up when the power is on
INP	Green	Positioning Completion Signal	Lights up when complete position command pulse and position deviation from target position is located within the sep up value to rotary switch
SON	Orange	Positioning Completion Signal	Servo on: Lights up Servo Off: Lights off
ALM	Red	Alarm Display	Flash when protection function is activated (Identifiable which protection mode is activated by counting the blinking times)

◆ Protection functions and LED flash times

Times	Protection	Conditions
1	Over Current Error	The current through power devices in inverter exceeds the limit value
2	Over Speed Error	Motor speed exceed 3,000rpm
3	Position Tracking Error	Position error value is higher than 90˚ in motor run state*1
4	Over Load Error	The motor is continuously operated more than 5 second under a load exceeding the max. torque
5	Over Temperature Error	Inside temperature of drive exceeds 85℃
6	Over Regenerated Voltage Error	Back-EMF more high limit value*2
7	Motor Connect Error	The power is ON without connection of the motor cable to drive
8	Encoder Connect Error	Cable connection error with Encoder connector in drive
9	Motor Voltage Error	Motor voltage is out of limited value*3
10	In-Position Error	After operation is finished, a position error occurs
11	System Error	Error occurs in drive system
12	ROM Error	Error occurs in parameter storage device(ROM)
14	Input Voltage Error	Power source voltage is out of limited value*4
15	Position Overflow Error	Position error value is higher than 90˚ in motor stop state*1

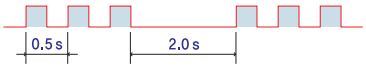

Alarm LED flash
(ex : Position tracking error)

*1 : The given value can be changed by parameter. (Please refer manual)
*2 : Voltage limit of Back-EMF depends on motor model (Refer to the Manual)
*3 : Motor limit voltage value depends on motor model (Refer to the Manual)
*4 : Limit value provided to drives depends on driver model (Refer to the Manual)

2. Network ID Selection Switch(SW1)

Position	ID number	Position	ID number
0	0	8	8
1	1	9	9
2	2	A	10
3	3	B	11
4	4	C	12
5	5	D	13
6	6	E	14
7	7	F	15

※Maximum 16 axis can be connected in one network.

3. Speed and Terminator Resistor Selection Switch(SW2)

The purpose of this is to setting the communication speed and connect a terminator resistor if drive is installed at the end of network.

SW 2.1 used for connecting the terminator resistor.
SW 2.2~SW 2.4 used for setting speed as follows.

SW 2.1	SW 2.2	SW 2.3	SW 2.4	Baud Rate[bps]
–	OFF	OFF	OFF	9,600
–	ON	OFF	OFF	19,200
–	OFF	ON	OFF	38,400
–	ON	ON	OFF	57,600
–	OFF	OFF	ON	115,200*1
–	ON	OFF	ON	230,400
–	OFF	ON	ON	460,800
–	ON	ON	ON	921,600

※For the high speed communication, PCI Bus type RS-485 communication board can be used. (Pease inquire to distributor)

*1 : Default setting value

If SW2.1 is OFF, terminator resistor is disconnected.If SW2.2 is ON, terminator resistor is connected.

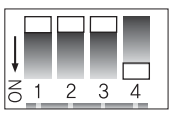

4. Input/Output Signal(CN1)

NO.	Function	I/O
1	LIMIT+	Input
2	LIMIT-	Input
3	ORIGIN	Input
4	Digital In1	Input
5	Digital In6	Input
6	Digital In7	Input
7	Compare Out1	Output
8	Digital Out1	Output
9	Digital Out2	Output
10	Digital Out3	Output
11	Digital Out4	Output
12	Digital Out5	Output
13	Digital Out6	Output
14	Digital In2	Input
15	Digital In3	Input
16	Digital In4	Input
17	Digital In5	Input
18	Digital In8	Input
19	Digital In9	Input
20	Digital Out7	Output
21	Digital Out8	Output
22	Digital Out9	Output
23	BRAKE+	Output
24	BRAKE-	Output
25	24VDC GND	Input
26	24VDC	Input

※BRAKE function is optional.
※There is no BRAKE function for 86mm motor drive.

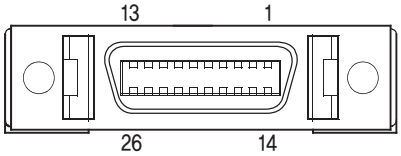

5. Encoder Connector(CN2)

NO.	Function	I/O
1	A+	Input
2	A-	Input
3	B+	Input
4	B-	Input
5	Z+	Input
6	Z-	Input
7	5VDC	Output
8	5VDC GND	Output
9	F. GND	----
10	F. GND	----

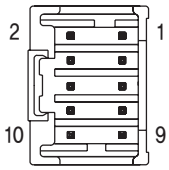

7. Power Connector(CN4)

NO.	Function
1	24VDC±10%
2	GND

NO.	Function
1	GND
2	40~70VDC

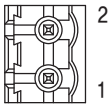

※Only for 86mm motor drive.

6. Motor Connector(CN3)

NO.	Function
1	A Phase
2	B Phase
3	/A Phase
4	/B Phase

NO.	Function
1	/B Phase
2	B Phase
3	/A Phase
4	A Phase

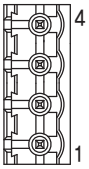

※Only for 86mm motor drive.

8. RS-485 Communication Connector(CN5)

NO.	Function	NO.	Function
1	GND	6	Data-
2	GND	7	GND
3	Data+	8	GND
4	GND	LED 1, 3	Drive status
5	GND	LED 2, 4	Communication status

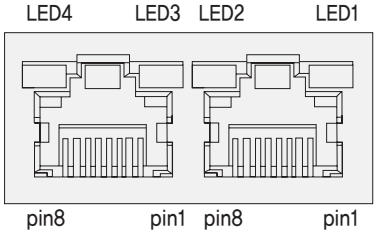

◆ Connector for Cabling

These connectors are serviced together with Ezi-SERVO Plus-R except when purchasing option cables.

CN1 : Input/Output Connector

Item	Specification	Maker
Connector	10126-3000PE	3M
Shell	10326-52F0-008	3M

CN2 : Encoder Connector

Item	Specification	Maker
Housing	51353-1000	MOLEX
Terminal	56134-9000	MOLEX

CN3 : Motor Connector

Item	Specification	Maker
Housing	5557-04R	MOLEX
Terminal	5556T	MOLEX

CN4 : Power Connector

Item	Specification	Maker
Housing	5557-02R	MOLEX
Terminal	5556T	MOLEX

CN3 : Motor Connector(86mm Motor Drive Only)

Item	Specification	Maker
Terminal Block	AK950-4	PTR
Housing	3191-4RI	MOLEX
Terminal	138IT	MOLEX

CN4 : Power Connector(86mm Motor Drive Only)

Item	Specification	Maker
Terminal Block	AK950-2	PTR

● Position Controller Embedded Drive System Configurations

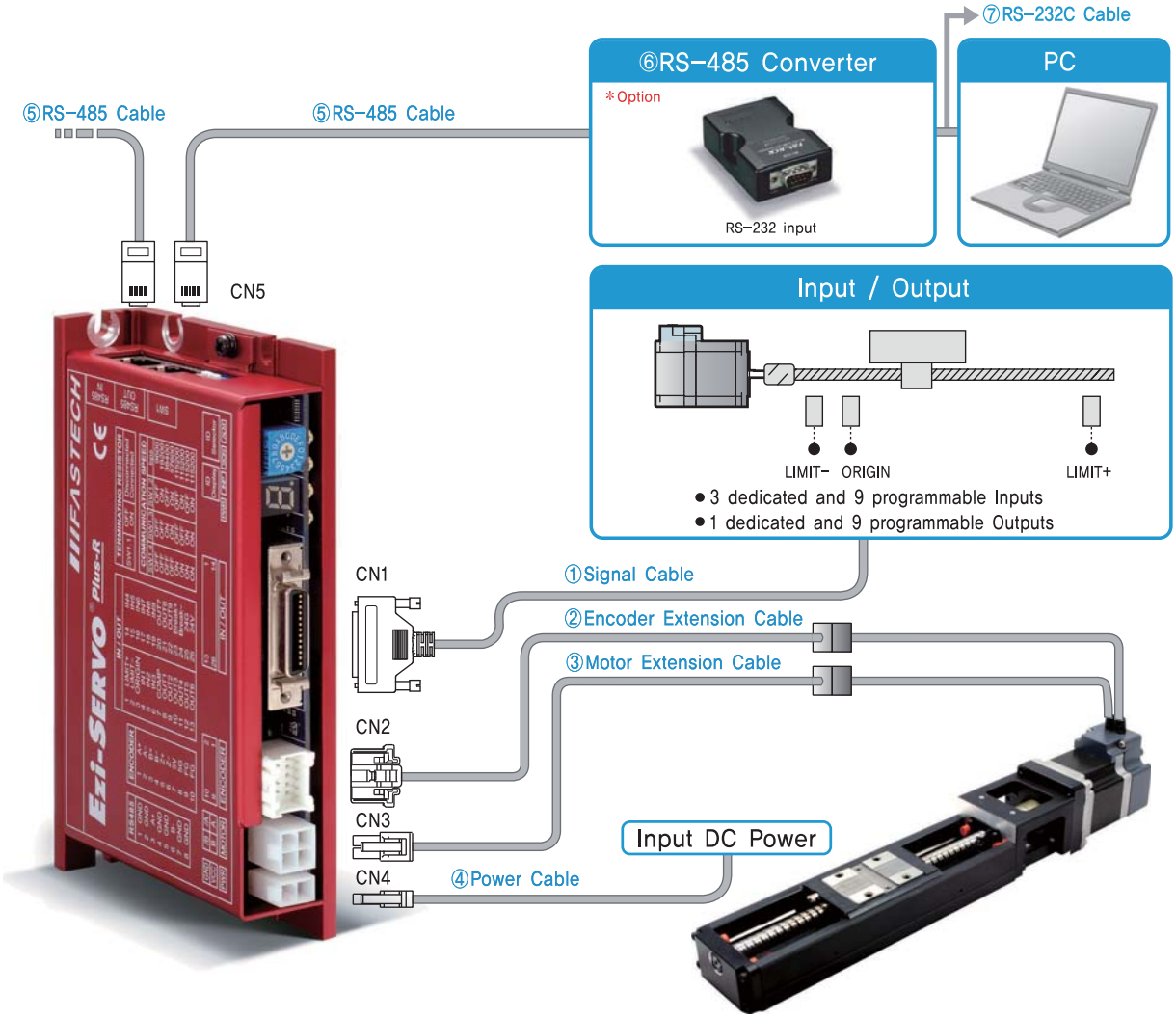

Type	Signal Cable	Encoder Cable	Motor Cable	Power Cable	RS-485 Cable
Standard Length	–	30cm	30cm	–	–
Max. Length	20m	20m	20m	2m	30m

1. Cable Option

①Signal Cable

Available to connect between Control System and Ezi-SERVO Plus-R.

Item	Length[m]	Remark
CSVR-S-□□□F	□□□	Normal Cable
CSVR-S-□□□M	□□□	Robot Cable

□ is for Cable Length. The unit is 1m and Max. 20m length.

②Encoder Extension Cable

Available to extended connection between Encoder and Ezi-SERVO Plus-R.

Item	Length[m]	Remark
CSVO-E-□□□F	□□□	Normal Cable
CSVO-E-□□□M	□□□	Robot Cable

□ is for Cable Length. The unit is 1m and Max. 20m length.

③Motor Extension Cable

Available to extended connection between motor and Ezi-SERVO Plus-R.

Item	Length[m]	Remark
CSVO-M-□□□F CSVO-M-□□□M	□□□ □□□	Normal Cable Robot Cable

□ is for Cable Length. The unit is 1m and Max. 2m length.

④Power Cable

Available to connect between Power and Ezi-SERVO Plus-R.

Item	Length[m]	Remark
CSVO-P-□□□F CSVO-P-□□□M	□□□ □□□	Normal Cable Robot Cable

□ is for Cable Length. The unit is 1m and Max. 2m length.

⑤RS-485 Cable

Item	Length[m]	Remark
CGNR-R-0R6F CGNR-R-001F CGNR-R-1R5F CGNR-R-002F CGNR-R-003F CGNR-R-005F	0.5 1 1.5 2 3 5	Normal Cable

2. Option (Sold separately)

⑥FAS-RCR(RS-232C to RS-485 Converter)

Item	Specification
Comm. Speed	Max. 115.2Kbps
Comm. Distance	RS-232C : Max. 15m RS-485 : Max. 1.2km
Connector Type	RS-232C : DB9 Female RS-485 : RJ-45
Dimension	50X75X23mm
Weight	38g
Power	Powered from PC (Usable for external DC5~24V)

⑦RS-232C Cable

Item	Length[m]	Remark
CGNR-C-002F CGNR-C-003F CGNR-C-005F	2 3 5	Normal Cable

⑧TB-Plus(Interface Board)

Available to connect more conveniently between Input/Output signal and Ezi-SERVO Plus-R.

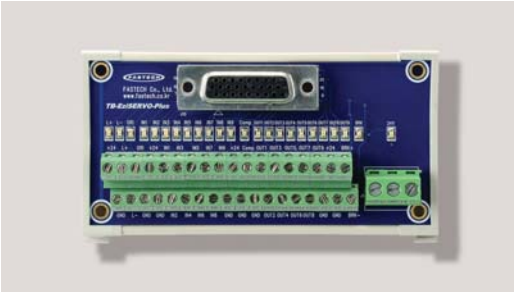

Interface Cable

Available to Connect between TB-Plus Interface Board and Ezi-SERVO Plus-R.

Item	Length[m]	Remark
CIFD-S-□□□F CIFD-S-□□□M	□□□ □□□	Normal Cable Robot Cable

□ is for Cable Length. The unit is 1m and Max. 2m length.

● Position Controller Embedded Drive System Configuration.(86mm Motor)

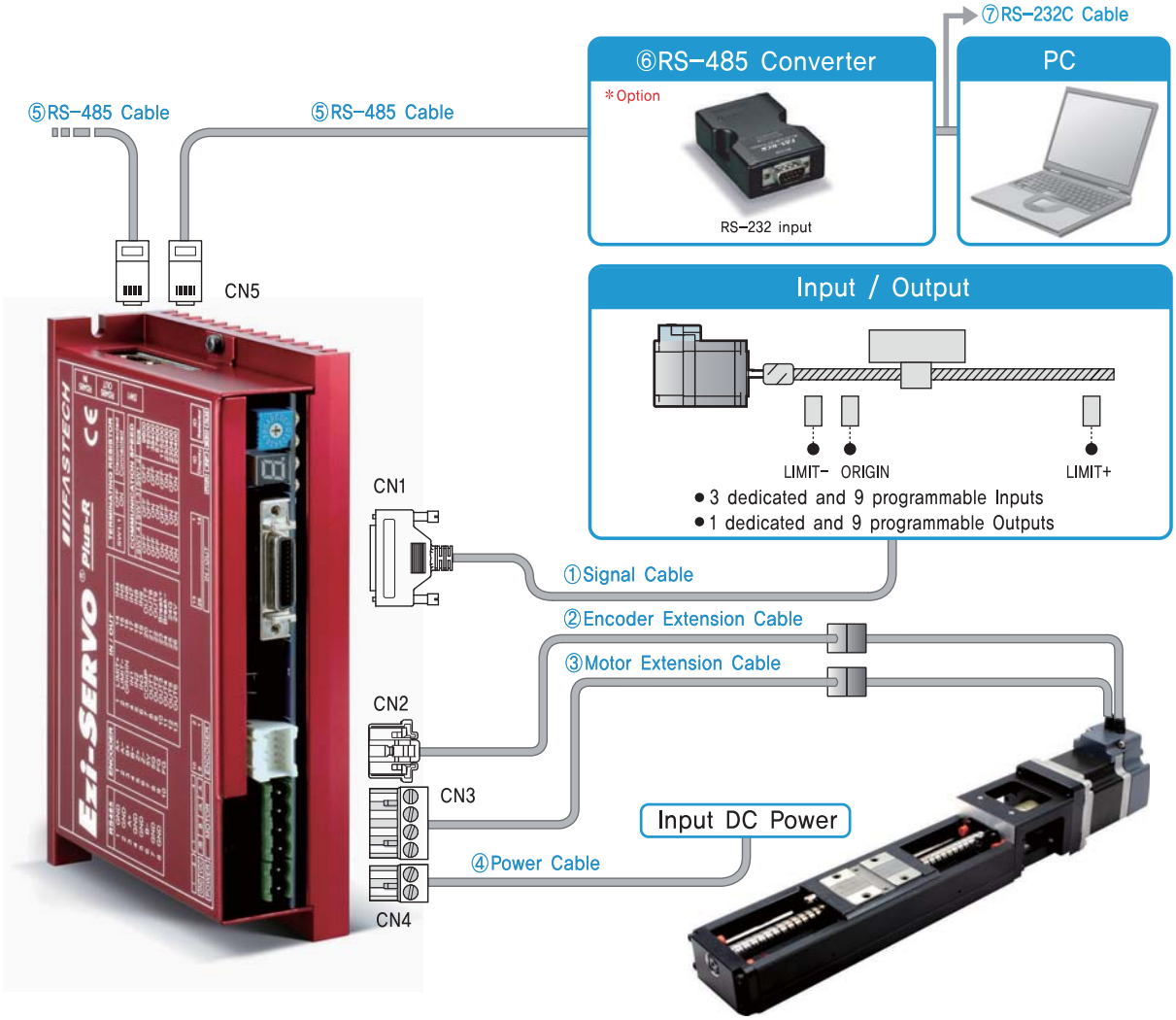

Type	Signal Cable	Encoder Cable	Motor Cable	Power Cable	RS-485 Cable
Standard Length	–	30cm	30cm	–	–
Max. Length	20m	20m	20m	2m	30m

1. Cable Option

①Signal Cable

Available to connect between Control System and Ezi-SERVO Plus-R.

Item	Length[m]	Remark
CSVR-S-□□□F	□□□	Normal Cable
CSVR-S-□□□M	□□□	Robot Cable

□ is for Cable Length. The unit is 1m and Max. 20m length.

②Encoder Extension Cable

Available to extended connection between Encoder and Ezi-SERVO Plus-R.

Item	Length[m]	Remark
CSVO-E-□□□F	□□□	Normal Cable
CSVO-E-□□□M	□□□	Robot Cable

□ is for Cable Length. The unit is 1m and Max. 20m length.

③Motor Extension Cable

Available to extended connection between motor and Ezi-SERVO Plus-R.

Item	Length[m]	Remark
CSVP-M-□□□F CSVP-M-□□□M	□□□ □□□	Normal Cable Robot Cable

□ is for Cable Length. The unit is 1m and Max. 2m length.

④Power Cable

Available to connect between Power and Ezi-SERVO Plus-R.

Item	Length[m]	Remark
CSVP-P-□□□F CSVP-P-□□□M	□□□ □□□	Normal Cable Robot Cable

□ is for Cable Length. The unit is 1m and Max. 2m length.

⑤RS-485 Cable

Item	Length[m]	Remark
CGNR-R-0R6F CGNR-R-001F CGNR-R-1R5F CGNR-R-002F CGNR-R-003F CGNR-R-005F	0.6 1 1.5 2 3 5	Normal Cable

2. Option

⑥FAS-RCR(RS-232C to RS-485 Converter)

Item	Specification
Comm. Speed	Max. 115.2Kbps
Comm. Distance	RS-232C : Max. 15m RS-485 : Max. 1.2km
Connector Type	RS-232C : DB9 Female RS-485 : RJ-45
Dimension	50X75X23mm
Weight	38g
Power	Powered from PC (Usable for external DC5~24V)

⑦RS-232C Cable

Item	Length[m]	Remark
CGNR-C-002F CGNR-C-003F CGNR-C-005F	2 3 5	Normal Cable

⑧TB-Plus(Interface Board)

Available to connect more conveniently between Input/Output signal and Ezi-SERVO Plus-R.

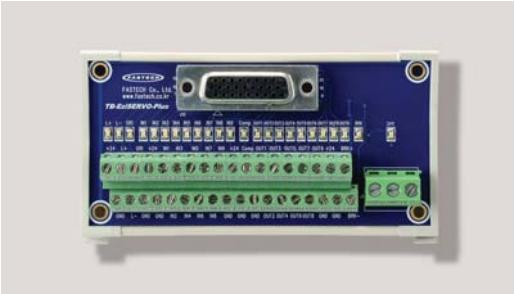

Interface Cable

Available to Connect between TB-Plus Interface Board and Ezi-SERVO Plus-R.

Item	Length[m]	Remark
CIFD-S-□□□F CIFD-S-□□□M	□□□ □□□	Normal Cable Robot Cable

□ is for Cable Length. The unit is 1m and Max. 2m length.

● Position Controller Embedded Drive External Configuration

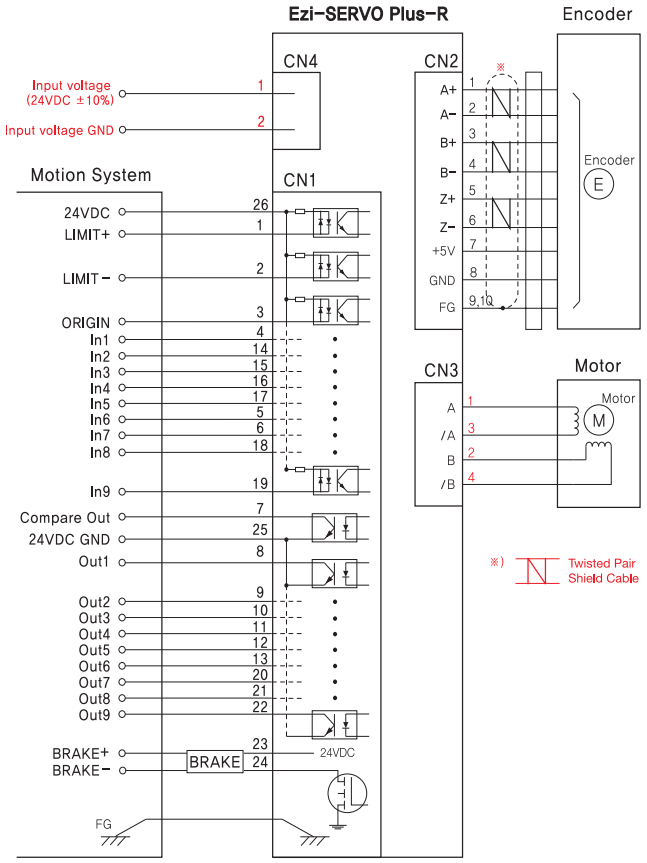

※ CAUTION ※

Please refer to the Manual when connects motor extension cable. Careful connection will be required to protect any damages.

● Position Controller Embedded Drive External Configuration.(86mm Motor)

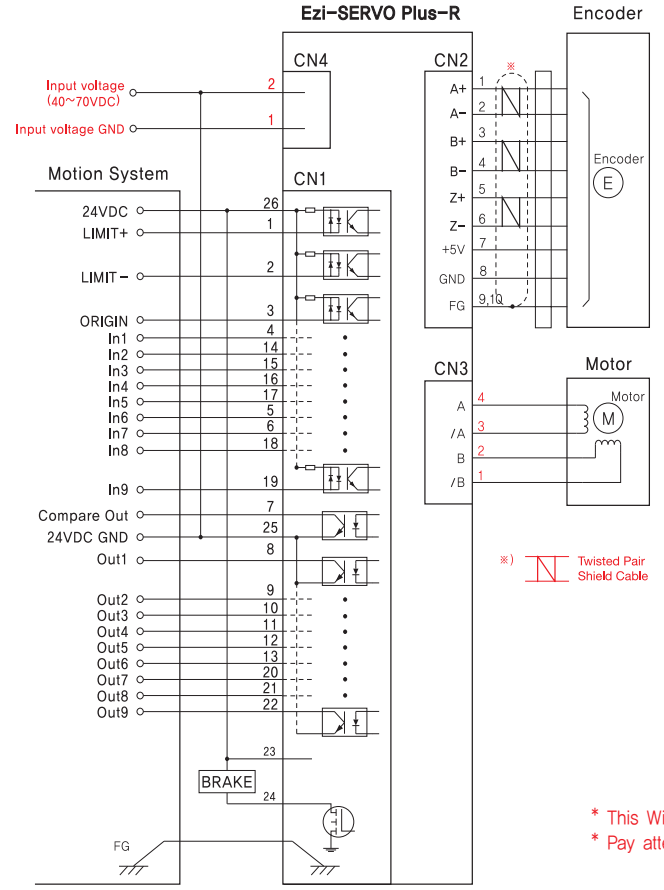

※ CAUTION ※

Please refer to the Manual when connects motor extension cable. Careful connection will be required to protect any damages.

* This Wiring Diagram is only for 86mm motor drive(EzS-NDR-86 series).
* Pay attention to red color that describe the difference.

● Setting and Operation of Mini Plus-R Type Position Controller Embedded Drive

Network ID setting(SW1)

Network ID display and status monitor

Input/Output connection(CN1)

Encoder connection(CN2)

Motor connection(CN3)

Power connection(CN4)

Speed and terminator resistor selection(SW2)

RS-485 connection (CN5, CN6)

1. Protection Function and 7-Segment Flash Times

Times	Protection	Conditions
1	Over Current Error	The current through power devices in inverter exceeds the limit value
2	Over Speed Error	Motor speed exceed 3,000rpm
3	Position Tracking Error	Position error value is higher than 90° in motor run state*1
4	Over Load Error	The motor is continuously operated more than 5 second under a load exceeding the max. torque
5	Over Temperature Error	Inside temperature of drive exceeds 85℃
6	Over Regeneratived Voltage Error	Back-EMF more than 50V
7	Motor Connect Error	The power is ON without connection of the motor cable to drive
8	Encoder Connect Error	Cable connection error with Encoder connector in drive
9	Motor Voltage Error	Motor voltage is less than 20V
10	In-Position Error	After operation is finished, a position error occurs
11	System Error	Error occurs in drive system
12	ROM Error	Error occurs in parameter storage device(ROM)
14	ROM Error	Error occurs in parameter storage device(ROM)
15	Position Overflow Error	Position error value is higher than 90° in motor stop state*1

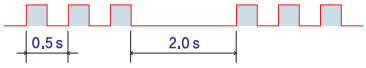

Alarm LED flash
(ex : Position tracking error)

*1 : This value can be changed by parameter (refer to manual)

2. Network ID Selection Switch(SW1)

Position	ID number	Position	ID number
0	0	8	8
1	1	9	9
2	2	A	10
3	3	B	11
4	4	C	12
5	5	D	13
6	6	E	14
7	7	F	15

※Maximum 16 axis can be connected in one network.

3. Motor Connector(CN3)

NO.	Function
1	B Phase
2	/B Phase
3	/A Phase
4	A Phase

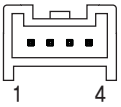

4. Speed and Terminator Resistor Selection Switch(SW2)

The purpose of this is to setting the communication speed and connect a terminator resistor if drive is installed at the end of network.

SW 2.1 used for connecting the terminator resistor.
SW 2.2~SW 2.4 used for setting speed as follows.

SW 2.1	SW 2.2	SW 2.3	SW 2.4	Baud Rate[bps]
–	OFF	OFF	OFF	9,600
–	ON	OFF	OFF	19,200
–	OFF	ON	OFF	38,400
–	ON	ON	OFF	57,600
–	OFF	OFF	ON	115,200*1
–	ON	OFF	ON	230,400
–	OFF	ON	ON	460,800
–	ON	ON	ON	921,600

※For the high speed communication, PCI Bus type RS-485 communication board can be used. (Pease inquire to distributor)

*1 : Default setting value

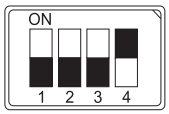

If SW2.1 is OFF, terminator resistor is disconnected.If SW2.2 is ON, terminator resistor is connected.

5. Input/Output Signal(CN1)

NO.	Function	I/O
1	24VDC	Input
2	24VDC GND	Input
3	BRAKE+	Output
4	BRAKE-	Output
5	+Limit Sensor	Input
6	-Limit Sensor	Input
7	Origin Sensor	Input
8	Digital IN 1	Input
9	Digital IN 2	Input
10	Digital IN 3	Input
11	Digital IN 4	Input
12	Digital IN 5	Input
13	Digital IN 6	Input
14	Digital IN 7	Input
15	Compare Out	Output
16	Digital OUT 1	Output

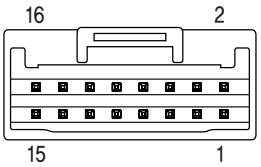

6. Encoder Connector(CN2)

NO.	Function	I/O
1	A+	Input
2	A-	Input
3	B+	Input
4	B-	Input
5	Z+	Input
6	Z-	Input
7	5VDC	Output
8	5VDC GND	Output
9	F. GND	----
10	F. GND	----

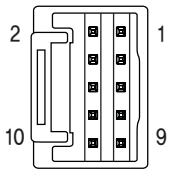

7. Power Connector(CN4)

NO.	Function
1	24VDC±10%
2	GND

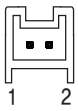

8. RS-485 Communication Connector(CN5, CN6)

RS-485 Communication Port to connect with Host Controller.

NO.	Function
1	+DATA
2	-DATA
3	GND

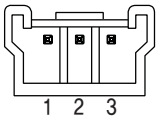

● Position Controller Embedded Drive System Configurations

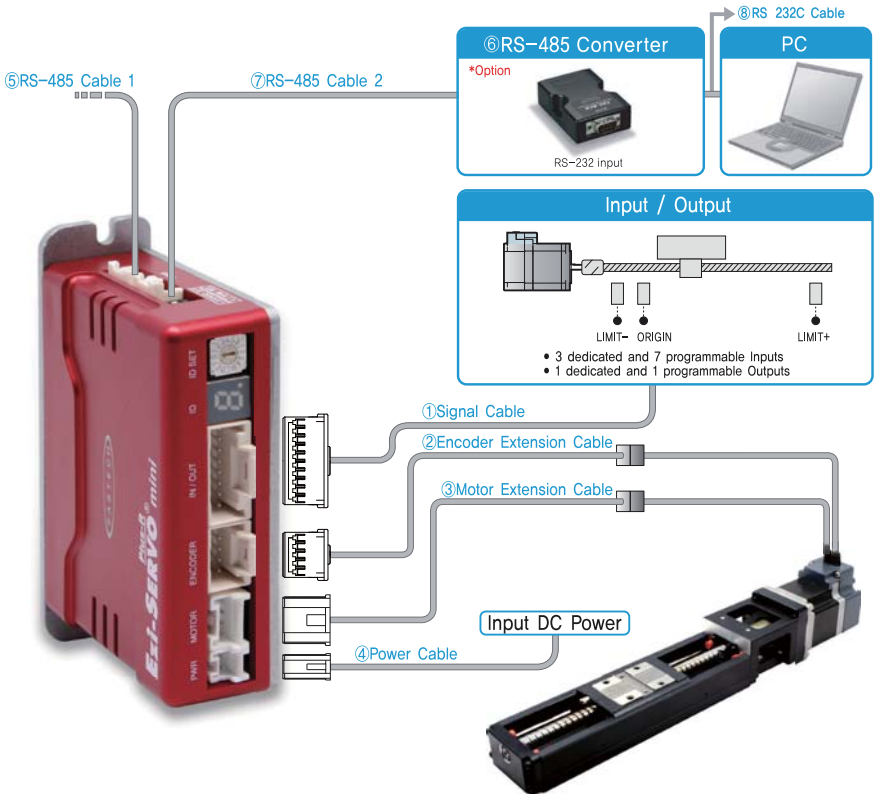

Type	Signal Cable	Encoder Cable	Motor Cable	Power Cable	RS-485 Cable
Standard Length	-	30cm	30cm	-	-
Max. Length	20m	20m	20m	2m	30m

1. Cable Option

①Signal Cable

Available to connect between Control System and Ezi-SERVO Plus-R MINI.

Item	Length[m]	Remark
CSVA-S-□□□F CSVA-S-□□□M	□□□ □□□	Normal Cable Robot Cable

□ is for Cable Length. The unit is 1m and Max. 20m length.

②Encoder Extension Cable

Available to extended connection between Encoder and Ezi-SERVO Plus-R MINI.

Item	Length[m]	Remark
CSVI-E-□□□F CSVI-E-□□□M	□□□ □□□	Normal Cable Robot Cable

□ is for Cable Length. The unit is 1m and Max. 20m length.

③Motor Extension Cable

Available to Extended connection between motor and Ezi-SERVO Plus-R MINI.

Item	Length[m]	Remark
CMNB-M-□□□F CMNB-M-□□□M	□□□ □□□	Normal Cable Robot Cable

□ is for Cable Length. The unit is 1m and Max. 20m length.

④Power Cable

Available to connect between Power and Ezi-SERVO Plus-R MINI.

Item	Length[m]	Remark
CMNB-P-□□□F CMNB-P-□□□M	□□□ □□□	Normal Cable Robot Cable

□ is for Cable Length. The unit is 1m and Max. 20m length.

⑤RS-485 Cable 2

Item	Length[m]	Remark
CGNB-R-0R6F CGNB-R-001F CGNB-R-1R5F CGNB-R-002F CGNB-R-003F CGNB-R-005F	0.6 1 1.5 2 3 5	Normal Cable

*Common cable to connect Ezi-SERVO ALL, Ezi-STEP ALL, Ezi-MotionLink and Ezi-SERVO Plus-R MINI thru by Network.

2. Option

⑥FAS-RCR(RS-232C to RS-485 Converter)

Item	Specification
Comm. Speed	Max. 115.2Kbps
Comm. Distance	RS-232C : Max. 15m RS-485 : Max. 1.2km
Connector Type	RS-232C : DB9 Female RS-485 : RJ-45
Dimension	50X75X23mm
Weight	38g
Power	Powered from PC (Usable for external DC5~24V)

⑦RS-485 Cable 1

(FAS-RCR to Ezi-SERVO ALL, FAS-RCR to Ezi-STEP ALL, FAS-RCR to Ezi-SERVO Plus-R MINI, FAS-RCR to Ezi-MotionLink)

Item	Length[m]	Remark
CGNA-R-0R6F CGNA-R-001F CGNA-R-1R5F CGNA-R-002F CGNA-R-003F CGNA-R-005F	0.6 1 1.5 2 3 5	Normal Cable

⑧RS-232C Cable

Item	Length[m]	Remark
CGNR-C-002F CGNR-C-003F CGNR-C-005F	2 3 5	Normal Cable

3. Connector for Cabling

Purpose	ITEM	Specification	Marker
Signal Connector (CN1)	Housing	501646-1600	MOLEX
	Terminal	501648-1000(AWG 26~28)	MOLEX
Encoder Connector (CN2)	Housing	501646-1000	MOLEX
	Terminal	501648-1000(AWG 26~28)	MOLEX
Motor Connector (CN3)	Housing	PAP-04V-S	JST
	Terminal	SPHD-001T-P0.5	JST
Power Connector (CN4)	Housing	PAP-02V-S	JST
	Terminal	SPHD-001T-P0.5	JST
RS-485 Connector (CN5, CN6)	Housing	35507-0300	MOLEX
	Terminal	50212-8100	MOLEX

※These connectors are serviced together with Ezi-SERVO Plus-R MINI except when purchasing option cables.
※Above connector is the most suitable product for Ezi-SERVO Plus-R MINI. Another equivalent connector can be used.

● Mini Plus-R Type Pulse Input Drive External Configuration

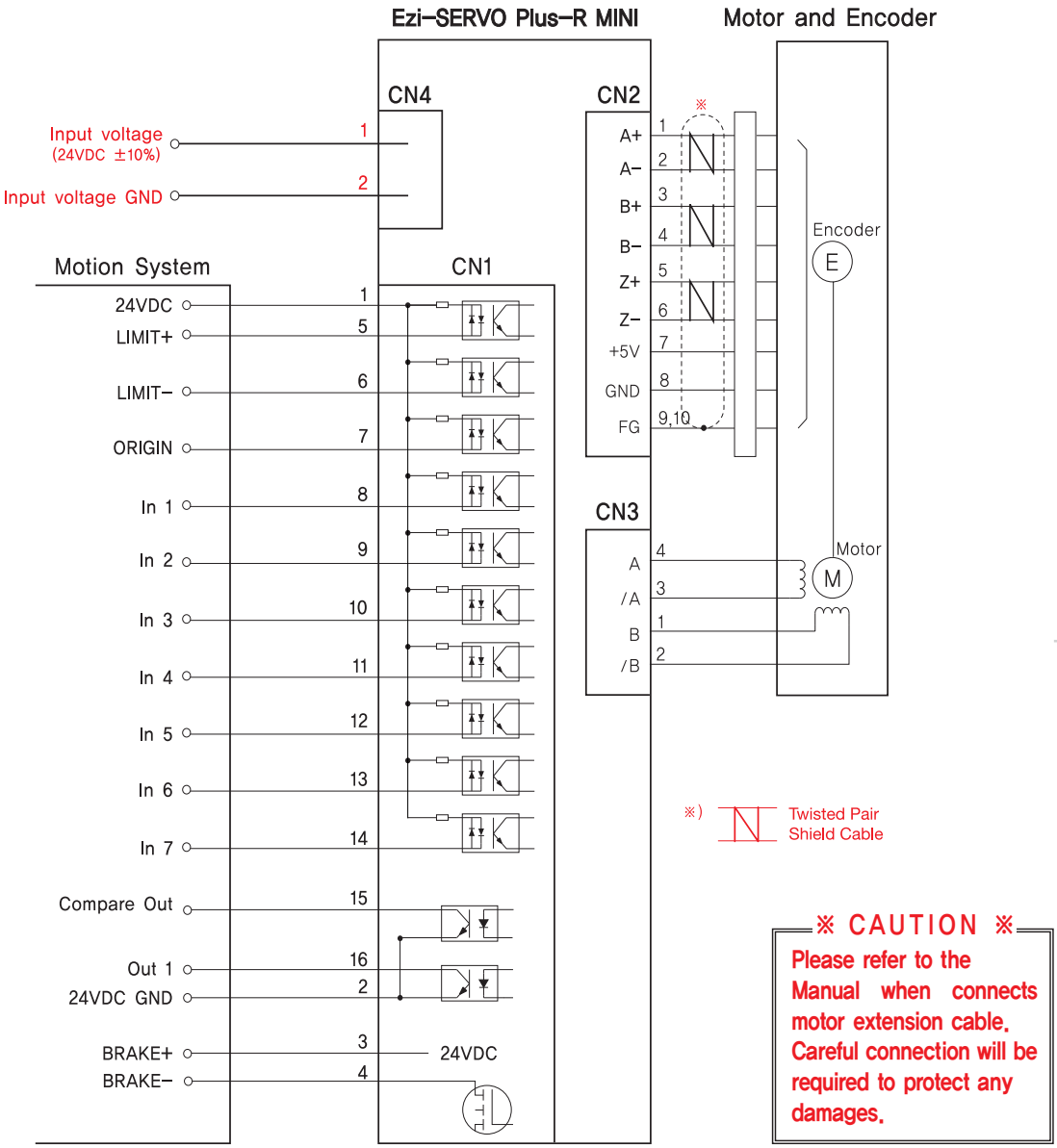

※ CAUTION ※

Please refer to the Manual when connects motor extension cable. Careful connection will be required to protect any damages.

● GUI(Graphic User Interface) Screenshot

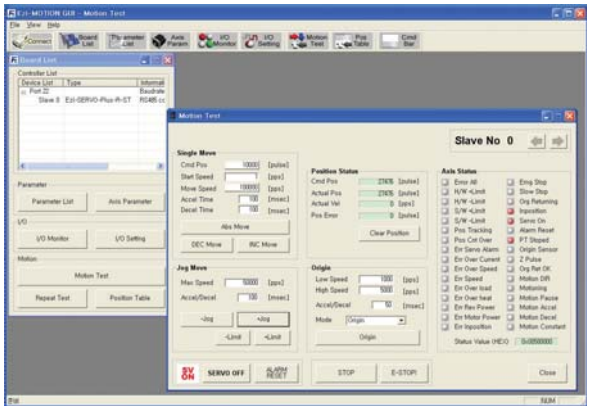

◆ Controller Lists and Motion Test

This screen display the controller list that connected to system. You can make a single move, jog and origin command and also the motor status is displayed.

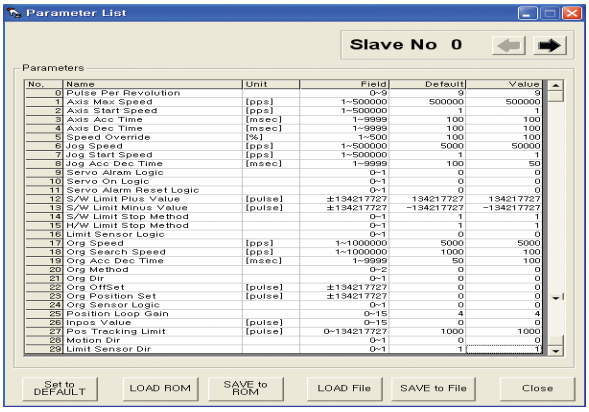

◆ Parameter List

All of the parameters are displayed and modified on this screen.

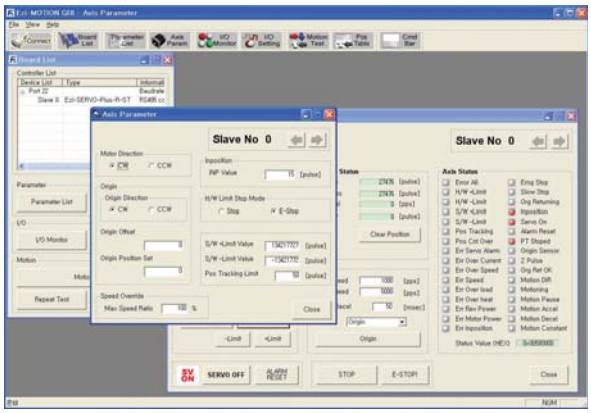

◆ Axis Parameter Setup

You can select various parameters that frequently used.
(ex : sensor input logic)

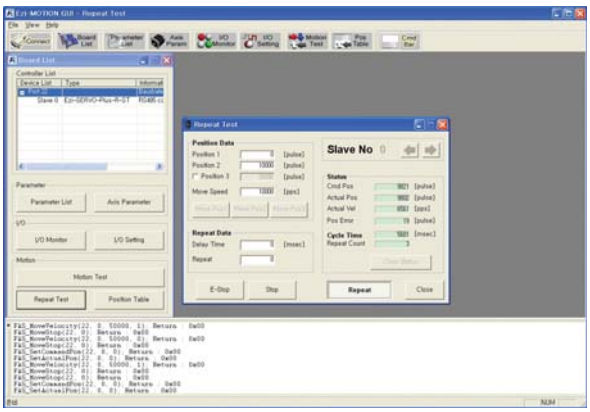

◆ Motion Repeat and Monitor Status

Target position, speed, delay time and repeat count are selected for repeat motion test. Motion library(DLL) is also displayed on screen.

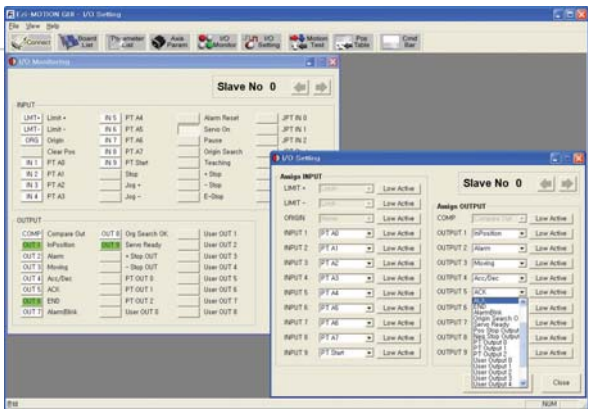

◆ I/O Monitoring and Setting

You can select various digital input and output signals of controller.

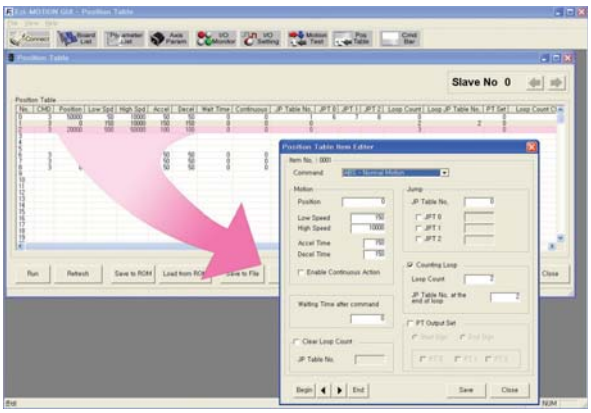

◆ Position Table

You can edit the position table and execute it. The position table data can be saved and loaded from Flash ROM and Windows file.

MEMO

MEMO

MEMO

FASTECH Ezi-Robo Mono-Stage

FASTECH

Fast, Accurate, Smooth Motion

FASTECH Co., Ltd.

Rm #1202, Bucheon Technopark 401 Dong, Yakdea-dong,
Wonmi-Gu, Bucheon-si, Gyeonggi-do, Rep. Of Korea (Zip)420-734
TEL : 82-32-234-6300,6301 FAX : 82-32-234-6302
E-mail : fastech@fastech.co.kr Homepage : www.fastech.co.kr

FASTECH AMERICA LLC

811 E Plano Parkway, Suite 110A, Plano, TX 75074 USA
Toll Free: 877-905-4428 972-218-0210
Email: support@fastechamerica.com
website: www.fastechamerica.com

©Copyright 2010 FASTECH Co,. Ltd.
All Rights Reserved. Dec 24, 2013 Rev.02