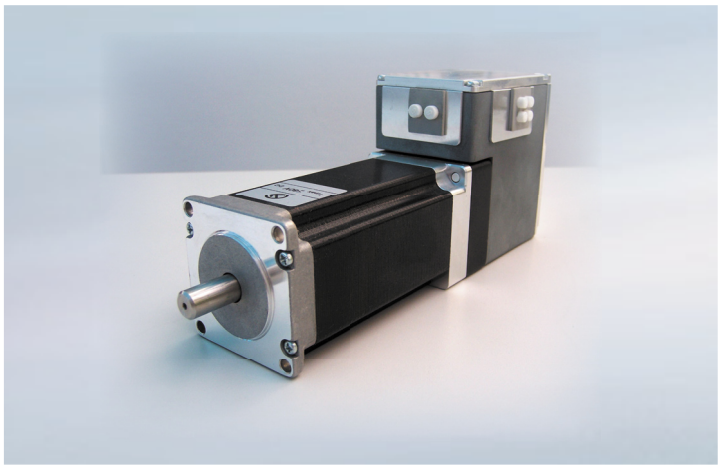

- Decentral Compact Servo Drive
- Mounting directly at the machine
- Motion Control
- Torque/force, speed, and positioning control
- Field bus: CANopen
- Restart Lock
- Auxiliary Feeder independent of the power circuit

		Series 23E21	Series 23E31	Series 23E41
Rated Values				
Peak torque (c.d.f. 40%)*	[Nm]	1.15	2.15	3.20
Stall torque (c.d.f. 100%)*	[Nm]	0.77**	1.20	2.20
Rated torque (c.d.f. 100%)*	[Nm]	0.40**	0.67	0.98
Rated speed	[min^{-1}]	1000	1000	1000
Stall current (per phase) (c.d.f. 100%)*	[A_{RMS}]	5.6	4.4	3.7
Rated current (per phase) (c.d.f.100%)*	[A_{RMS}]	3.3	3.4	1.8
* Mounting flange Ø 130 mm / thickness 7.5 mm	** preliminary			
Technical Data Motor				
Torque constant	[Nm/A]	0.16	0.19	0.54
Voltage constant	[V/1000min^{-1}]	8.4	9.9	28.3
Motor inertia	[kgm^2x10^{-3}]	0.026	0.048	0.069
Insulation class		B, 130°C		
Max. axial load	[N]	80		
Max. radial load	[N]	100		
Max. axial load during assembly	[N]	150		
Technical Data Incremental Encoder				
Resolution	[inc/rev]	128,000		
Technical Data Multiturn Absolute Value Encoder				
Resolution		17 bit/rev and 12 bit revolutions		
Technical Data Singleturn Absolute Value Encoder				
Resolution		17 bit/rev		

Electrical Connection Data

DC Supply		
Power supply	V_{DC}	24 .. 60
Recommended fuse for power supply	A	5 A (slow)
Logic supply	V_{DC}	24 (18 .. 30)
Recommended fuse for logic supply	A	3 A (slow)
Control Signals		
5 digital control signal inputs (2 isolated)	V	LOW 0-7, HIGH 12-36
	mA	2 (at 24 V)
2 digital control signal outputs (2 isolated)	V	24
	A	0.2

Dimensions and Weights		
Dimensions: cf. drawings on the next page		
Weight 23E21	kg	1.55 *
Weight 23E31	kg	1.75 *
Weight 23E41	kg	2.50 *

*) without braking module

Characteristic 23E21

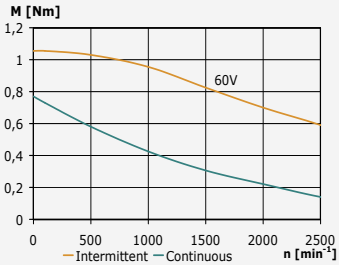

Characteristic 23E31

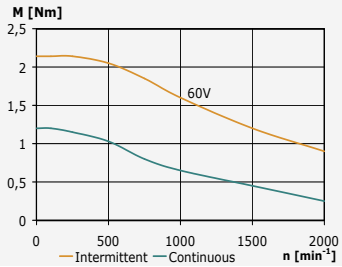

Characteristic 23E41

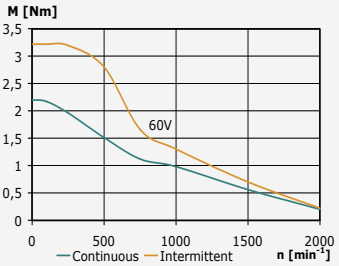

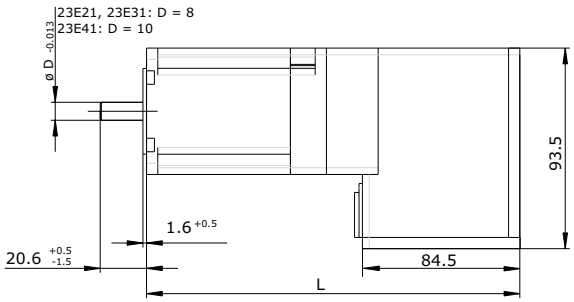

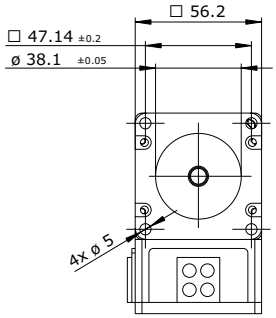

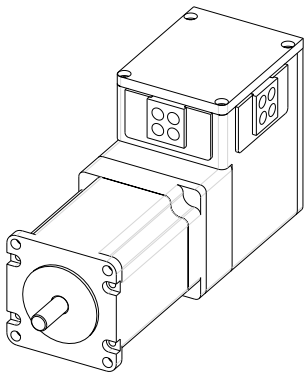

23E21 without braking module	L = 142,5
23E21 with braking module	L = 186,4
23E31 without braking module	L = 164,5
23E31 with braking module	L = 208,4
23E41 without braking module	L = 199,5
23E41 with braking module	L = 243,4

All lengths with incremental encoder. With absolute value encoder, length increases by 20 mm.

Basic Functions

- Digital current, speed, and position control with position, speed and torque limiting
- Digital filter functions effective on resonant loads
- Jerk filters optimize the motion profiles
- Short-circuit, voltage, temperature, encoder, tracking error, and I^2xt monitoring
- Parameterisation via CANopen
- Limit switch and reference sensor evaluation, various homing modes
- Enabling of output stage via digital input
- Readiness for operation message via digital output
- Restart lockout via second enable input

Positioning control on field bus (CANopen)

- Direct setpoint setting
- Interpolation / Motion Control

Options

- Braking modules 0.5 Nm or 1.5 Nm
- Absolute value encoder (multiturn or singleturn)

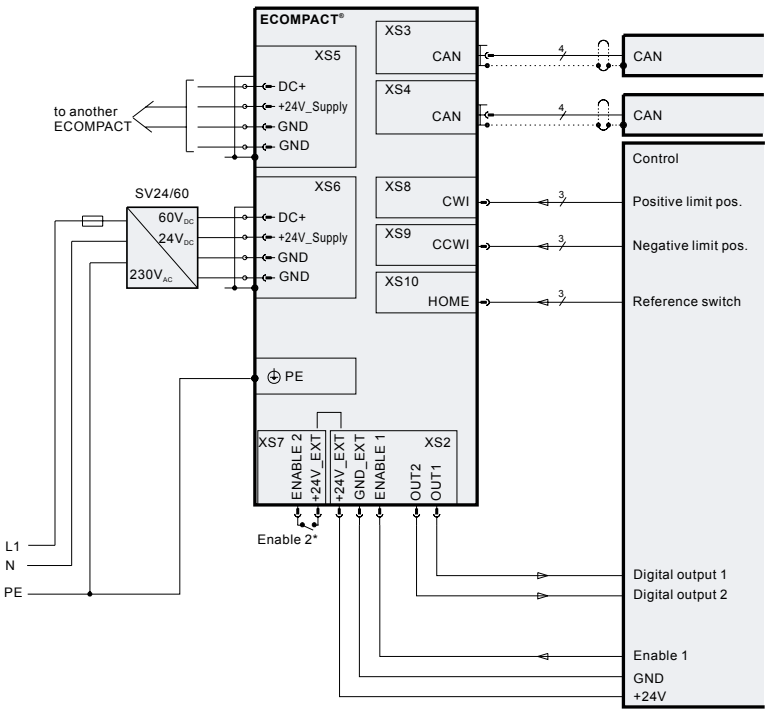

*) Optionally, XS7 can be implemented as a free configurable digital input (ECOMPACT-23Exx-xxx-xxx-BB-...)

Ambient Conditions	
Ambient temperature during operation with rated load	5 °C .. 40 °C
Storage temperature	-10 °C .. 70 °C
Degree of humidity (non-condensing)	5 .. 95% of rel. humidity (RH-2 acc. to IEC 61 132-2)
Cooling	by means of motor flange and convection
Installation altitude	max. 1000 m above mean sea level without power reduction
Mounting position	any
Protection class	IP40

Applicable Standards	
Noise immunity	acc. to EN61800-3
Noise emission	acc. to EN61800-3
CE safety	acc. to EN61800-5-1

Jenaer Antriebstechnik GmbH • Buchaer Str. 1 • D-07745 Jena • Tel.: +49 (0)3641/ 6 33 76-55 • Fax: +49(0) 3641/ 6 33 76-26