TRANSTECNO®
the modular gearmotor

CM-CMP

CM-CMP

CM-CMP Alu

Motoriduttori a vite senza fine
Wormgearmotors



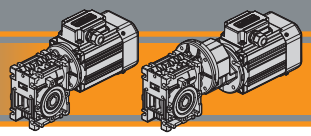

Indice	*Index*	Pag. *Page*
Caratteristiche tecniche	*Technical features*	**G2**
Designazione	*Classification*	**G2**
Sensi di rotazione	*Direction of rotation*	**G4**
Simbologia	*Symbols*	**G4**
Lubrificazione	*Lubrication*	**G5**
Carichi radiali	*Radial loads*	**G6**
Dati di dentatura	*Toothing data*	**G7**
Rendimento	*Efficiency*	**G8**
Dati tecnici	*Technical data*	**G9**
Motori applicabili	*IEC Motor adapters*	**G21**
Dimensioni	*Dimensions*	**G24**
Accessori	*Accessories*	**G39**
Opzioni	*Options*	**G40**

Questa sezione annulla e sostituisce ogni precedente edizione o revisione. Qualora questa sezione non Vi sia giunta in distribuzione controllata, l'aggiornamento dei dati ivi contenuto non è assicurato. **In tal caso la versione più aggiornata è disponibile sul nostro sito internet www.transtecno.com**

This section replaces any previous edition and revision. If you obtained this catalogue other than through controlled distribution channels, the most up to date content is not guaranteed. ***In this case the latest version is available on our web site www.transtecno.com***

Caratteristiche tecniche — *Technical features*

L'elevata modularità contraddistingue i motoriduttori a vite senza fine della serie CM e CMP: i diversi kit entrata ed uscita li rendono estremamente versatili.
Le caratteristiche principali della serie CM e CMP sono:

- Carcassa in alluminio nelle grandezze 026, 030, 040, 050, 063, 070, 075, 090 e 110. La grandezza 130 è costruita con carcassa in ghisa;
- Le grandezze 090, 110 e 130 sono fornite con cuscinetti a rulli conici sulla vite;
- Le precoppie sono costruite con carcassa in allumino;

The high degree of modularity is a design feature of CM and CMP wormgearmotors range thanks to a wide selection of input and output kits.
Main features of CM and CMP range are:

- *Die-cast aluminium housing on sizes 026, 030, 040, 050, 063, 070, 075, 090 and 110. Cast iron housing on size 130;*
- *Double taper roller bearing on sizes 090, 110 and 130;*
- *Die-cast aluminium housing on pre-stage units;*

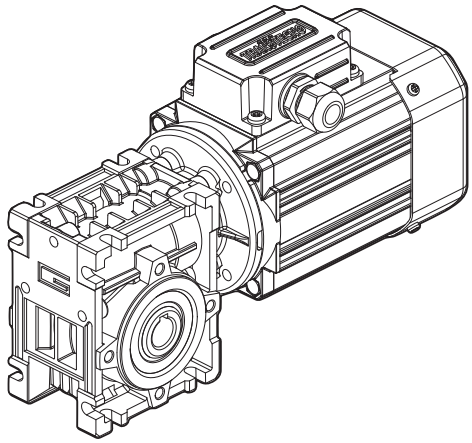

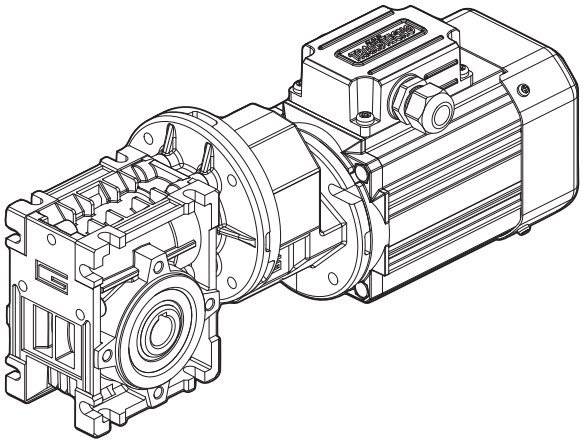

Designazione — *Classification*

RIDUTTORI A VITE SENZA FINE / WORMGEARBOXES

RIDUTTORE / *GEARBOX*

CM	050	U	10	71	B5	SZDX	BRSX	90	M1	VS	SC
Tipo *Type*	Grandezza *Size*	Versione riduttore *Gearbox Version*	Rapporto *Ratio*	IEC	Forma costruttiva *Version*	Albero di uscita *Output shaft*	Braccio di reazione *Torque arm*	Angolo *Angle*	Pos. di montaggio *Mounting position*	Opzioni *Options*	Accessori *Accessories*
CM  **CMIS** 	**026** **026 (D11)** **026 (D14)** **030** **040** **050** **063** **070** **075** **090** **110** **130**	**U** **F...**	Vedere tabella *See tables*	**56..** **—** **132..**	**B5** **B14**	**SZDX** **SZSX** **DZ**	**BRDX** **BRSX** (*)	**0°** **90°** **180°** **270°**	**M1** (B3) **M2** (V6) **M3** (B8) **M4** (V5) **M6** (B6) **M5** (B7)	**VS****	**SC** Safety cover **WD** Washdown cover

Versione Riduttore *Gearbox Version*

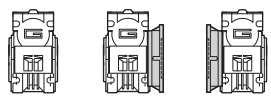

Albero di uscita *Output shaft*

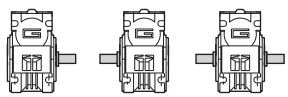

Braccio di reazione (*) *Torque arm*

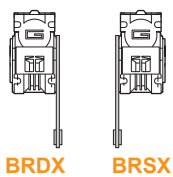

Angolo *Angle*

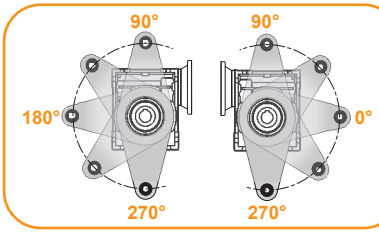

(*) NOTA: il braccio di reazione viene fornito smontato.
NOTE: the torque arm will be supplied not assembled.

** NOTA: Vite sporgente costruita su richiesta
NOTE: Extended input shaft built on request

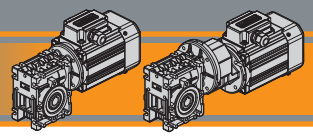

Designazione — *Classification*

RIDUTTORI A VITE SENZA FINE CON PRECOPPIA / *PRE-STAGE WORMGEARBOXES*

RIDUTTORE / *GEARBOX*

CMP	063/050	U	90	63	B14	SZDX	BRSX	90	P4	M1	VS	SC
Tipo *Type*	Grandezza *Size*	Versione Riduttore *Gearbox Version*	Rapporto *Ratio*	IEC	Forma costruttiva Version	Albero di uscita *Output shaft*	Braccio di reazione *Torque arm*	Angolo *Angle*	Pos. di montaggio precoppia *Pre stage mounting position*	Pos. di montaggio *Mounting position*	Opzioni *Options*	Accessori *Accessories*
CMP	**056/030** **056/040** **063/040** **063/050** **063/063** **071/050** **071/063** **071/070** **071/075** **071/090** **080/063** **080/070** **080/075** **080/090** **080/110** **080/130** **090/070** **090/075** **090/090** **090/110** **090/130**	**U** **F...**	Vedere tabella *See tables*	**56..** **—** **80..**	**B5** **B14**	**SZDX** **SZSX** **DZ**	**BRDX** **BRSX** (*)	**0°** **90°** **180°** **270°**	**P1** **P2** **P3** (standard) **P4**	**M1** (B3) **M2** (V6) **M3** (B8) **M4** (V5) **M6** (B6) **M5** (B7)	VS**	**SC** Safety cover **WD** Washdown cover

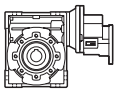

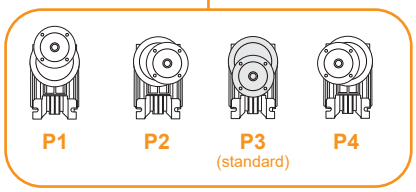

(*) NOTA: il braccio di reazione viene fornito smontato.
NOTE: the torque arm will be supplied not assembled.

** NOTA: Vite sporgente costruita su richiesta
NOTE: Extended input shaft built on request

MOTORE TRIFASE / *THREE PHASE MOTOR*

SMT	63	2	4	0.18 kW	IE2	B14	230-400 V	50 Hz	TEFC	BR	T1
Tipo *Type*	Grandezza *Size*	Indicativo potenza *Power coefficient*	Poli *Poles*	Potenza *Power*	Efficienza *Efficiency level*	Forma costruttiva *Version*	Tensione *Voltage*	Frequenza *Frequency*	*Ventilazione Fan cooling*	*Opzioni Options*	Pos. Morsettiera *Terminal box pos.*
SMT	N1 pag.	**1-2-3-4-5**	**4**	**0.04 kW** **...** **2.2 kW**	**IE1-IE2-IE3** N4 pag.	**B14**	**230-400 V** **460V**	**50Hz** **60Hz**	**TEFC** **TENV**	Q1-P1 Q1-S1 pag.	**T1** (Std) **T4** **T2** **T3**



MOTORE MONOFASE / *SINGLE PHASE MOTOR*

SMM	63	2	4	0.18 kW	B14	230 V	50 Hz	TEFC	UL-CSA	T1
Tipo *Type*	Grandezza *Size*	Indicativo potenza *Power coefficient*	Poli *Poles*	Potenza *Power*	Forma costruttiva *Version*	Tensione *Voltage*	Frequenza *Frequency*	*Ventilazione Fan cooling*	*Opzioni Options*	Pos. Morsettiera *Terminal box pos.*
SMM	N1 pag.	**1-2-3-4**	**4**	**0.04 kW** **...** **0.75 kW**	**B14**	**230V**	**50Hz**	**TEFC** **TENV**	Q1 pag.	**T1** (Std) **T4** **T2** **T3**



MOTORE TRIFASE / *THREE PHASE MOTOR*

T	2A	63	2	4	0.18 kW	B5	PTO	230-400 V	50 Hz	T1
Tipo *Type*	Efficienza *Efficiency level*	Grandezza *Size*	Indicativo potenza *Power coefficient*	Poli *Poles*	Potenza *Power*	Forma costruttiva *Version*	Protezione termica *Thermal protector*	Tensione *Voltage*	Frequenza *Frequency*	Pos. Morsettiera *Terminal box pos.*
T	**S** (IE1) **2A** (IE2) **3A** (IE3)	T1 pag.	**1-2-3-S** **L1-L2** **M1-M2**	**2** **4** **6**	**0.09 kW** **...** **2.2 kW**	**B5** **B14** **B3**	**Null** **PTO**	**230-400 V** **50Hz** **275-480 V** **60Hz** **400-690 V** **50Hz**		**T1** (Std) **T4** **T2** **T3**

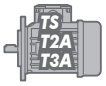

Sensi di rotazione — *Direction of rotation*

CM

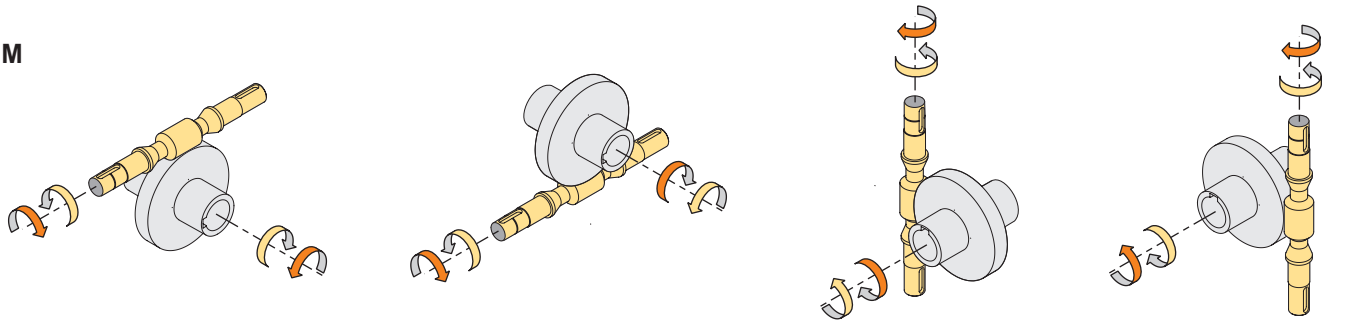

CMP

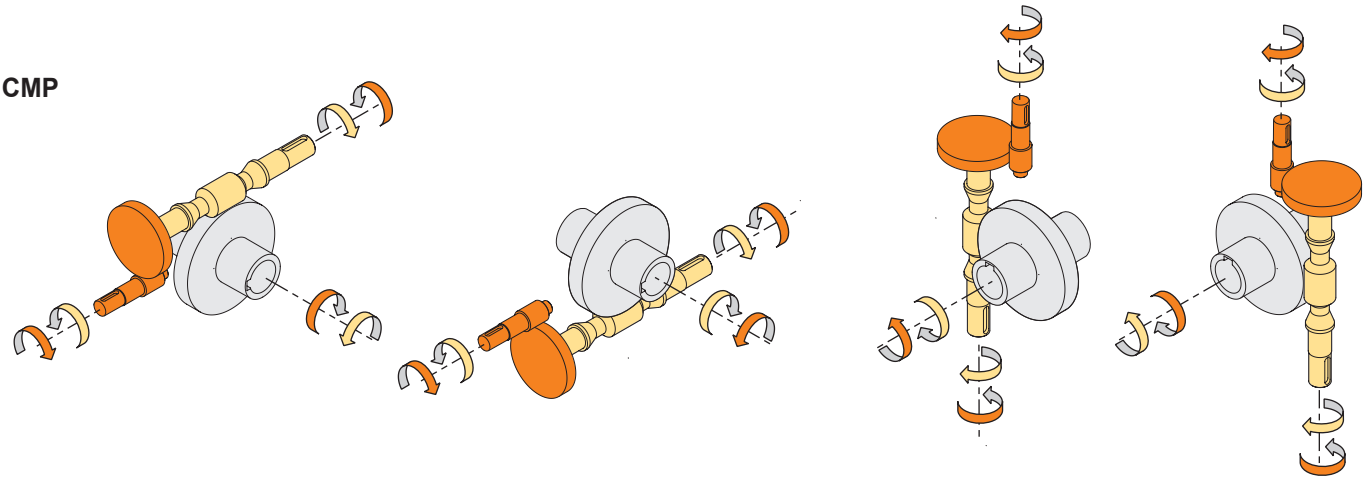

Simbologia — *Symbols*

n_1	[min^{-1}]	Velocità in ingresso / *Input speed*	sf		Fattore di servizio / *Service factor*
n_2	[min^{-1}]	Velocità in uscita / *Output speed*	Rd	%	Rendimento dinamico / *Dynamic efficiency*
i		Rapporto di riduzione / *Ratio*	Rs	%	Rendimento statico / *Static efficiency*
P_1	[kW]	Potenza in entrata / *Nominal input power*	R_2	[N]	Carico radiale ammissibile in uscita / *Permitted output radial load*
M_2	[Nm]	Coppia in uscita in funzione di P_1 / *Output torque referred to P_1*	A_2	[N]	Carico assiale ammissibile in uscita / *Permitted output axial load*
Pn_1	[kW]	Potenza nominale in entrata / *Nominal input power*	Z		Numero di principi della vite / *Worm starts*
Mn_2	[Nm]	Coppia nominale in uscita in funzione di Pn_1 / *Nominal output torque referred to Pn_1*	β		Angolo d'elica / *Helix angle*
Kg	[kg]	Peso del solo riduttore / *Weight of the gearbox only*			

Lubrificazione

Lubrication

Tutti i motoriduttori sono forniti completi di lubrificante sintetico viscosità 320, pertanto possono essere installati in qualunque posizione di monatggio e non necessitano di manutenzione.

Permanent synthetic oil long-life lubrication (viscosity grade 320) makes it possible to use the gearmotors in all mounting positions; for this reason they can be installed in any assembly position and do not require maintenance.

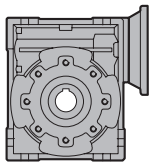

CM	Quantità di olio (litri) / *Oil quantity (litres)*					
	M1 (B3)	**M3** (B8)	**M6** (B6)	**M5** (B7)	**M4** (V5)	**M2** (V6)
130	4.5	3.3	3.5	3.5	4.5	3.3

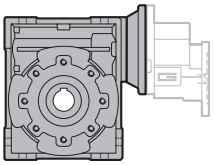

CMP	Quantità di olio (litri) / *Oil quantity (litres)*					
	M1 (B3)	**M3** (B8)	**M6** (B6)	**M5** (B7)	**M4** (V5)	**M2** (V6)
080/130 - 090/130	4.5	3.3	3.5	3.5	4.5	3.3

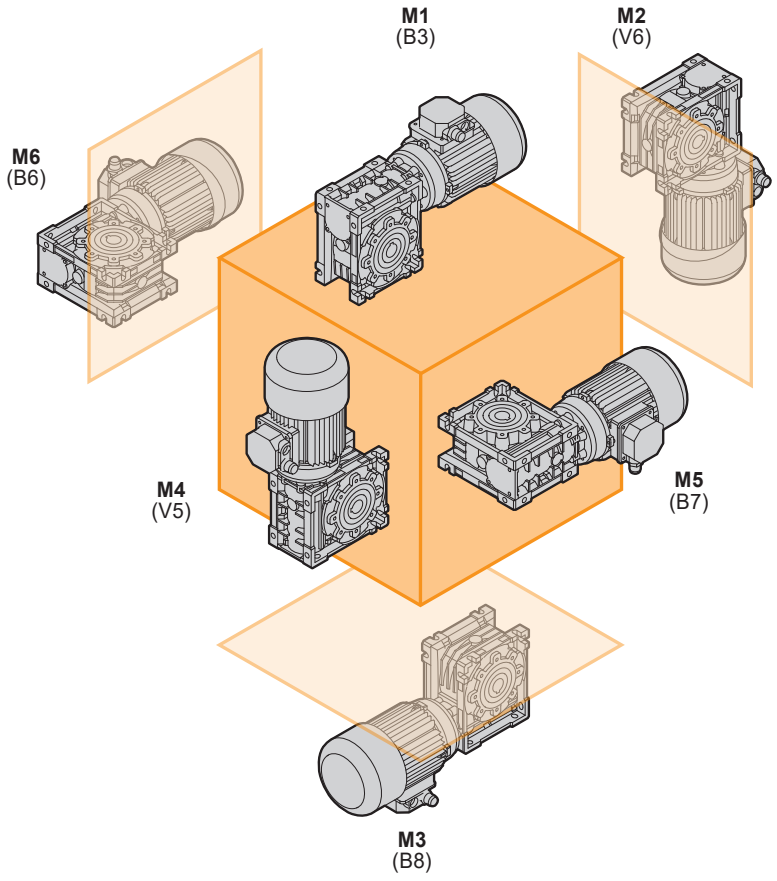

CM_CMP 130

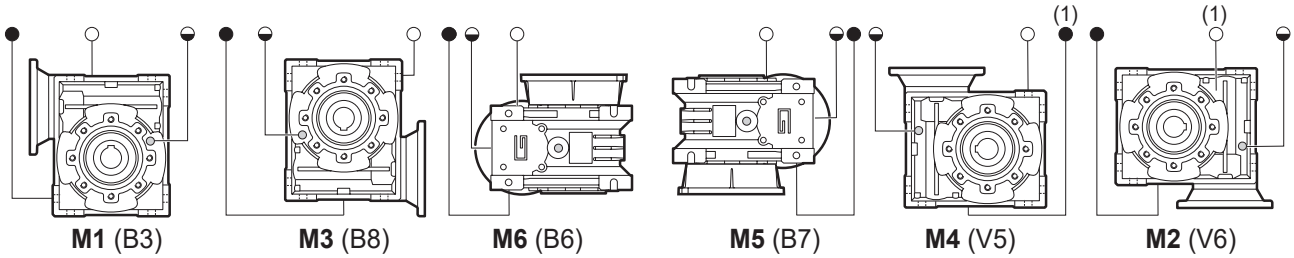

(standard)

(1): Tappo in posizione posteriore / *Plug in backside position*

◯ Sfiato e tappo di riempimento / *Breather and filling plug*
◒ Livello olio / *Oil level plug*
● Tappo di scarico / *Oil drain plug*

Carichi radiali — *Radial loads*

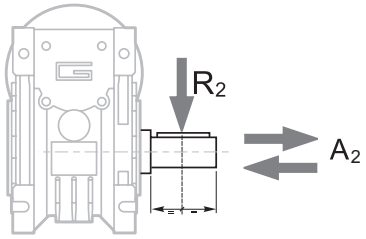

$A_2 = R_2 \times 0.2$

n_2 [min^{-1}]	R_2 [N]									
	CM026	CM030	CM040	CM050	CM063	CM070	CM075	CM090	CM110	CM130
187	400	674	1264	1770	2445	2613	2824	3161	5058	5732
140	490	743	1392	1949	2692	2878	3110	3481	5570	6313
93	580	851	1596	2234	3085	3298	3564	3990	6384	7235
70	610	936	1754	2456	3392	3626	3918	4386	7018	7953
56	610	1008	1890	2646	3654	3906	4221	4725	7560	8567
47	610	1069	2004	2805	3874	4141	4475	5009	8014	9083
35	610	1179	2210	3095	4273	4568	4937	5526	8842	10021
28	610	1270	2381	3334	4603	4921	5318	5953	9524	10794
23	610	1356	2542	3559	4915	5254	5678	6356	10170	11526
18	610	1471	2759	3862	5334	5702	6162	6897	11036	12507
14	610	1600	3000	4200	5800	6200	6700	7500	12000	13600
		CMP... /030	CMP... /040	CMP... /050	CMP... /063	CMP... /070	CMP... /075	CMP... /090	CMP... /110	CMP... /130

Quando il carico radiale risultante non è applicato sulla mezzeria dell'albero occorre calcolare quello effettivo con la seguente formula:

When the resulting radial load is not applied on the centre line of the shaft it is necessary to calculate the effective load with the following formula:

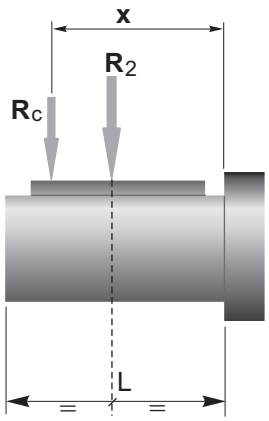

	CM	CM / CMP								
	026	030	040	050	063	070	075	090	110	130
a	56	65	84	101	120	122	131	182	176	188
b	43	50	64	76	95	92	101	122	136	148
R_{2MAX}	610	1600	3000	4200	5800	6200	6700	7500	12000	13600

$$R_c = \frac{R_2 \cdot a}{(b+x)} \leq R_{2MAX}$$

$$R \leq R_c$$

a, b = valori riportati nella tabella
a, b = values given in the table

Nota:
I carichi radiali fanno riferimento agli alberi di uscita a pag. G37.

Note:
Radial loads refer to output shafts at pag. G37.

Nota:
In caso di carico radiale applicato su entrambi i lati dell'albero di uscita doppio è necessario dimezzare il valore massimo da tabella che sarà riferito ad ogni lato

Note:
For radial loads applied in both sides of double output shaft it is necessary to halve the values of the tables for each side of the shaft.

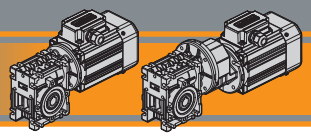

Dati di dentatura

Toothing data

	Dati della coppia vite-corona *Worm wheel data*	Rapporto / *Ratio*											
		5	**7.5**	**10**	**15**	**20**	**25**	**30**	**40**	**50**	**60**	**80**	**100**
CM026	Z	6	4	3	2	2		1	1	1	1		
	β	34° 35'	24° 41'	19° 1'	12° 57 '	10° 30'		6° 33'	5° 17'	4° 26'	3°49'		
CM030	Z	6	4	3	2	2	2	1	1	1	1	1	1
	β	27° 4'	24° 28'	18° 50'	12° 49'	10° 23'	8° 43'	6° 29'	5° 14'	4° 23'	3° 46'	2° 57'	2° 25'
CM040	Z	6	4	3	2	2	2	1	1	1	1	1	1
	β	34° 19'	24° 28'	18° 50'	12° 49'	10° 23'	8° 43'	6° 29'	5° 14'	4° 23'	3°46'	2° 57'	2° 25'
CM050	Z	6	4	3	2	2	2	1	1	1	1	1	1
	β	33° 37'	23° 54'	18° 23'	12° 29'	10° 6'	8° 28'	6° 19'	5° 5'	4° 15'	3° 39'	2°51'	2° 20'
CM063	Z	6	4	3	2	2	2	1	1	1	1	1	1
	β	34° 23'	24° 31'	18° 53'	12° 50'	10° 24'	8° 44'	6° 30'	5° 14'	4° 23'	3° 47'	2° 57'	2° 25'
CM070	Z		4	3	2	2	2	1	1	1	1	1	1
	β		26°12'	20°15'	13°49'	11°15'	9°29'	7°0'	5°41'	4°46'	4°7'	3°13'	2°39'
CM075	Z		4	3	2	2	2	1	1	1	1	1	1
	β		26° 17'	20° 20'	13° 52'	11° 18'	9° 32'	7° 2'	5° 42'	4° 48'	4° 8'	3° 14'	2° 40'
CM090	Z		4	3	2	2	2	1	1	1	1	1	1
	β		29° 11'	22° 43'	15° 36'	12° 50'	10° 53'	7° 56'	6° 30'	5° 29'	4° 45'	3° 45'	3° 6'
CM110	Z		4	3	2	2	2	1	1	1	1	1	1
	β		28° 14'	21° 56'	15° 1'	14° 41'	12° 34'	7° 38'	7° 28'	6° 21'	5° 32'	4° 24'	3° 39'
CM130	Z		4	3	2	2	2	1	1	1	1	1	1
	β		28°43'	22°20'	15°19'	13°47'	11°54'	7°48'	7°00'	6°01'	5°16'	4°08'	3°27'

Rendimento — *Efficiency*

	n_1 [min^{-1}]	Rendimento *Efficiency*	Rapporto / *Ratio*										
			5	7.5	10	15	20	25	30	40	50	60	80	100
CM026	2800	Rd	89	87	85	83	80		73	68	64	60		
	1400		87	84	83	78	74		66	61	57	53		
	900		84	83	80	75	71		61	57	52	48		
		Rs	72	71	68	61	56	46	41	36	34			
CM030	2800	Rd	89	88	86	84	81	78	74	70	65	62	57	52
	1400		86	85	84	79	75	72	67	62	58	55	48	43
	900		84	83	81	75	71	68	62	58	53	49	43	39
		Rs	72	67	63	55	50	43	39	35	31	27	23	21
CM040	2800	Rd	90	89	87	84	83	80	77	73	69	66	60	56
	1400		88	86	84	81	78	74	70	65	60	58	52	46
	900		86	84	82	77	74	70	66	60	57	53	46	41
		Rs	74	71	67	60	55	51	45	40	36	32	28	24
CM050	2800	Rd	91	90	88	86	84	82	78	74	71	68	62	58
	1400		89	87	85	82	79	76	72	67	63	60	54	49
	900		87	85	84	79	75	72	68	62	59	55	48	43
		Rs	73	70	66	59	55	51	44	39	35	32	27	23
CM063	2800	Rd	91	90	88	86	84	83	79	76	73	70	65	60
	1400		90	88	86	84	81	78	75	70	66	63	57	52
	900		89	86	84	81	78	75	70	65	61	58	52	47
		Rs	73	71	67	60	55	51	45	40	36	33	28	24
CM070	2800	Rd		90	89	87	85	84	80	77	74	72	67	62
	1400			89	87	84	82	80	76	72	68	65	60	53
	900			87	85	82	79	77	72	67	63	60	54	49
		Rs		72	69	62	60	55	48	43	38	36	31	26
CM075	2800	Rd		90	89	87	85	84	81	78	75	72	68	63
	1400			89	87	84	83	80	77	73	69	66	60	56
	900			87	85	83	80	77	73	68	64	61	55	50
		Rs		73	69	62	59	55	48	43	39	36	31	27
CM090	2800	Rd		91	90	88	86	85	83	80	78	75	71	67
	1400			90	88	86	84	83	79	76	72	69	64	60
	900			88	87	84	82	80	76	72	68	65	60	55
		Rs		74	71	65	61	59	51	46	42	39	34	30
CM110	2800	Rd		90	89	88	87	86	82	81	79	77	73	70
	1400			89	88	86	85	84	80	79	76	73	68	64
	900			88	87	84	83	82	78	75	71	68	63	59
		Rs		74	71	64	64	60	50	49	46	42	37	33
CM130	2800	Rd		90	89	88	87	86	82	80	79	77	72	70
	1400			89	88	86	84	83	79	76	75	73	69	64
	900			88	87	84	82	81	77	74	73	70	64	59
		Rs		74	71	64	64	60	50	49	46	42	37	33

Rendimento teorico del riduttore dopo il rodaggio
Theoretical efficiency of the gearbox after the first running period

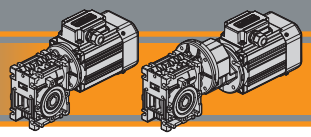

Dati tecnici — n_1 1400 min^{-1} — ***Technical data***

	n_2 [min^{-1}]	Mn_2 [Nm]	Pn_1 [kW]	i
CMIS026				
	280	13	0.44	5
	187	14	0.33	7,5
	140	14	0.25	10
	93	14	0.18	15
	70	14	0.14	20
	47	15	0.11	30
	35	14	0.08	40
	28	13	0.07	50
	23	12	0.06	60
CMIS030				
	280	18	0.61	5
	187	20	0.46	7.5
	140	21	0.37	10
	93	21	0.26	15
	70	19	0.19	20
	56	20	0.16	25
	47	22	0.16	30
	35	20	0.12	40
	28	19	0.10	50
	23	17	0.08	60
	18	15	0.06	80
	14	14	0.05	100
CMIS040				
	280	41	1.37	5
	187	44	1.00	7.5
	140	45	0.79	10
	93	45	0.54	15
	70	40	0.38	20
	56	38	0.30	25
	47	48	0.34	30
	35	42	0.24	40
	28	39	0.19	50
	23	36	0.15	60
	18	33	0.12	80
	14	31	0.10	100
CMIS050				
	280	75	2.5	5
	187	79	1.8	7.5
	140	82	1.4	10
	93	82	0.98	15
	70	72	0.67	20
	56	70	0.54	25
	47	88	0.60	30
	35	76	0.42	40
	28	72	0.34	50
	23	69	0.28	60
	18	60	0.20	80
	14	56	0.17	100
CMIS063				
	280	134	4.4	5
	187	144	3.2	7.5
	140	148	2.5	10
	93	154	1.8	15
	70	136	1.23	20
	56	135	1.0	25
	47	166	1.1	30
	35	142	0.74	40
	28	136	0.60	50
	23	126	0.49	60
	18	118	0.38	80
	14	116	0.33	100

	n_2 [min^{-1}]	Mn_2 [Nm]	Pn_1 [kW]	i
CMIS070				
	187	200	4.4	7.5
	140	218	3.7	10
	93	221	2.6	15
	70	202	1.8	20
	56	180	1.3	25
	47	241	1.6	30
	35	210	1.1	40
	28	190	0.82	50
	23	181	0.68	60
	18	159	0.49	80
	14	154	0.43	100
CMIS075				
	187	238	5.2	7.5
	140	257	4.3	10
	93	266	3.1	15
	70	242	2.1	20
	56	225	1.7	25
	47	289	1.8	30
	35	251	1.3	40
	28	227	0.96	50
	23	218	0.82	60
	18	193	0.59	80
	14	183	0.49	100
CMIS090				
	187	342	7.4	7.5
	140	380	6.2	10
	93	433	4.9	15
	70	414	3.6	20
	56	369	2.6	25
	47	493	3.0	30
	35	434	2.1	40
	28	385	1.5	50
	23	352	1.2	60
	18	324	0.92	80
	14	299	0.72	100
CMIS110				
	187	605	13	7.5
	140	669	11.0	10
	93	730	8.2	15
	70	740	6.0	20
	56	670	4.7	25
	47	815	4.9	30
	35	768	3.6	40
	28	699	2.7	50
	23	626	2.1	60
	18	562	1.5	80
	14	523	1.2	100
CMIS130				
	187	750	16.5	7.5
	140	820	13.7	10
	93	910	10.3	15
	70	910	7.9	20
	56	920	6.5	25
	47	1050	6.5	30
	35	1050	5.1	40
	28	970	3.8	50
	23	890	3.0	60
	18	830	2.2	80
	14	735	1.7	100

Nota:
Pn_1 è la potenza meccanica.
La potenza applicabile è ridotta del fattore termico.
Per maggiori dettagli consultare il nostro Servizio Tecnico.

Note:
Pn_1 is an input mechanical power which must be reduced by the heating factor in order to get the relevant one. For more details please contact our Technical Service.

Dati tecnici

Technical data

0.04 - IEC 56

	P_1 [kW]	n_2 [min^{-1}]	M_2 [Nm]	sf	i			
SMT5014	**280**	1	11.0	5	**CM026**		**B14**
SMM5014	**187**	2	8.1	7.5	**CM026**		**B14**
(1400 min^{-1})	**140**	2	6.2	10	**CM026**		**B14**
	93	3	4.4	15	**CM026**		**B14**
	70	4	3.5	20	**CM026**		**B14**
	47	5	2.8	30	**CM026**		**B14**
	35	7	2.1	40	**CM026**		**B14**
	28	8	1.7	50	**CM026**		**B14**
	23	9	1.4	60	**CM026**		**B14**
	280	1	15.3	5	**CM030**		**B14**
	187	2	11.5	7.5	**CM030**		**B14**
	140	2	9.2	10	**CM030**		**B14**
	93	3	6.5	15	**CM030**		**B14**
	70	4	4.6	20	**CM030**		**B14**
	56	5	4.1	25	**CM030**		**B14**
	47	5	4.0	30	**CM030**		**B14**
	35	7	3.0	40	**CM030**		**B14**
	28	8	2.4	50	**CM030**		**B14**
	23	9	1.9	60	**CM030**		**B14**
	23	11	2.4	60		**CMP056/030**	**B14**
	19	13	2.1	75		**CMP056/030**	**B14**
	18	10	1.4	80	**CM030**		**B14**
	16	14	2.3	90		**CMP056/030**	**B14**
	14	12	1.2	100	**CM030**		**B14**
	12	17	1.7	120		**CMP056/030**	**B14**
	9.3	20	1.4	150		**CMP056/030**	**B14**
	28	8	4.8	50	**CM040**		**B14**
	23	9	3.8	60	**CM040**		**B14**
	23	11	5.2	60		**CMP056/040**	**B14**
	19	13	3.9	75		**CMP056/040**	**B14**
	18	11	2.9	80	**CM040**		**B14**
	16	15	4.7	90		**CMP056/040**	**B14**
	14	13	2.5	100	**CM040**		**B14**
	12	19	3.3	120		**CMP056/040**	**B14**
	9.3	21	2.7	150		**CMP056/040**	**B14**
	7.8	24	2.3	180		**CMP056/040**	**B14**
	5.8	28	1.7	240		**CMP056/040**	**B14**
	4.7	30	1.4	300		**CMP056/040**	**B14**

0.06 - IEC 56

	P_1 [kW]	n_2 [min^{-1}]	M_2 [Nm]	sf	i			
SMT5024	**280**	2	7.3	5	**CM026**		**B14**
SMM5024	**187**	3	5.4	7.5	**CM026**		**B14**
(1400 min^{-1})	**140**	3	4.1	10	**CM026**		**B14**
	93	5	2.9	15	**CM026**		**B14**
	70	6	2.3	20	**CM026**		**B14**
	47	8	1.9	30	**CM026**		**B14**
	35	10	1.4	40	**CM026**		**B14**
	28	12	1.1	50	**CM026**		**B14**
	23	13	0.9	60	**CM026**		**B14**

0.06 - IEC 56

	P_1 [kW]	n_2 [min^{-1}]	M_2 [Nm]	sf	i			
SMT5024	**280**	2	10.2	5	**CM030**		**B14**
SMM5024	**187**	3	7.7	7.5	**CM030**		**B14**
(1400 min^{-1})	**140**	3	6.1	10	**CM030**		**B14**
	93	5	4.3	15	**CM030**		**B14**
	70	6	3.1	20	**CM030**		**B14**
	56	7	2.7	25	**CM030**		**B14**
	47	8	2.7	30	**CM030**		**B14**
	35	10	2.0	40	**CM030**		**B14**
	28	12	1.6	50	**CM030**		**B14**
	23	14	1.3	60	**CM030**		**B14**
	23	16	1.6	60		**CMP056/030**	**B14**
	19	19	1.4	75		**CMP056/030**	**B14**
	18	16	1.0	80	**CM030**		**B14**
	16	21	1.5	90		**CMP056/030**	**B14**
	14	18	0.8	100	**CM030**		**B14**
	12	26	1.1	120		**CMP056/030**	**B14**
	9.3	29	0.9	150		**CMP056/030**	**B14**
	28	12	3.2	50	**CM040**		**B14**
	23	14	2.5	60	**CM040**		**B14**
	23	17	3.4	60		**CMP056/040**	**B14**
	19	20	2.6	75		**CMP056/040**	**B14**
	18	17	1.9	80	**CM040**		**B14**
	16	23	3.1	90		**CMP056/040**	**B14**
	14	19	1.6	100	**CM040**		**B14**
	12	28	2.2	120		**CMP056/040**	**B14**
	9.3	32	1.8	150		**CMP056/040**	**B14**
	7.8	35	1.5	180		**CMP056/040**	**B14**
	5.8	41	1.1	240		**CMP056/040**	**B14**
	4.7	46	0.9	300		**CMP056/040**	**B14**

0.09 - IEC 56

	P_1 [kW]	n_2 [min^{-1}]	M_2 [Nm]	sf	i			
SMT5034	**280**	3	4.9	5	**CM026**		**B14**
SMM5034	**187**	4	3.6	7.5	**CM026**		**B14**
SMT5624	**140**	5	2.7	10	**CM026**		**B14**
SMM5624	**93**	7	1.9	15	**CM026**		**B14**
(1400 min^{-1})	**70**	9	1.5	20	**CM026**		**B14**
	47	12	1.2	30	**CM026**		**B14**
	35	15	0.9	40	**CM026**		**B14**
TS5624-B14	**280**	3	6.8	5	**CM030**		**B5/B14**
TS5624-B5	**187**	4	5.1	7.5	**CM030**		**B5/B14**
(1400 min^{-1})	**140**	5	4.1	10	**CM030**		**B5/B14**
	93	7	2.9	15	**CM030**		**B5/B14**
	70	9	2.1	20	**CM030**		**B5/B14**
	56	11	1.8	25	**CM030**		**B5/B14**
	47	12	1.8	30	**CM030**		**B5/B14**
	35	15	1.3	40	**CM030**		**B5/B14**
	28	18	1.1	50	**CM030**		**B5/B14**
	23	20	0.8	60	**CM030**		**B5/B14**

Motori *Motors*	SMT		SMM		TS
	5014 5024 5034	5624	5014 5024 5034	5624	5624
IEC	56 B14	56 B14	56 B14	56 B14	56 B5/B14

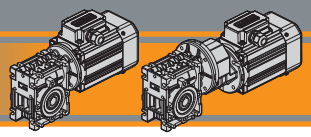

Dati tecnici

Technical data

0.09 - IEC 56

P_1 [kW]	n_2 [min^{-1}]	M_2 [Nm]	sf	i			IEC
SMT5034	**23**	24	1.1	60		**CMP056/030**	**B14**
SMM5034	**19**	29	0.9	75		**CMP056/030**	**B14**
SMT5624	**16**	32	1.0	90		**CMP056/030**	**B14**
SMM5624	**12**	38	0.8	120		**CMP056/030**	**B14**
(1400 min^{-1})							
	35	16	2.6	40	**CM040**		**B5/B14**
	28	18	2.1	50	**CM040**		**B5/B14**
	23	21	1.7	60	**CM040**		**B5/B14**
TS5624-B14	**23**	25	2.3	60		**CMP056/040**	**B14**
TS5624-B5	**19**	30	1.7	75		**CMP056/040**	**B14**
(1400 min^{-1})	**18**	26	1.3	80	**CM040**		**B5/B14**
	16	34	2.1	90		**CMP056/040**	**B14**
	14	28	1.1	100	**CM040**		**B5/B14**
	12	42	1.5	120		**CMP056/040**	**B14**
	9.3	48	1.2	150		**CMP056/040**	**B14**
	7.8	53	1.0	180		**CMP056/040**	**B14**
	5.8	62	0.8	240		**CMP056/040**	**B14**

0.12 - IEC 56

SMT5044	**280**	4	3.7	5	**CM026**		**B14**
SMT5634	**187**	5	2.7	7.5	**CM026**		**B14**
SMT5634IE2	**140**	7	2.1	10	**CM026**		**B14**
SMM5634	**93**	10	1.5	15	**CM026**		**B14**
(1400 min^{-1})	**70**	12	1.2	20	**CM026**		**B14**
	47	16	0.9	30	**CM026**		**B14**
	280	4	5.1	5	**CM030**		**B14**
	187	5	3.8	7.5	**CM030**		**B14**
	140	7	3.1	10	**CM030**		**B14**
	93	10	2.2	15	**CM030**		**B14**
	70	12	1.5	20	**CM030**		**B14**
	56	15	1.4	25	**CM030**		**B14**
	47	16	1.3	30	**CM030**		**B14**
	35	20	1.0	40	**CM030**		**B14**
	28	24	0.8	50	**CM030**		**B14**
	280	4	11.4	5	**CM040**		**B14**
	187	5	8.3	7.5	**CM040**		**B14**
	140	7	6.5	10	**CM040**		**B14**
	93	10	4.5	15	**CM040**		**B14**
	70	13	3.1	20	**CM040**		**B14**
	56	15	2.5	25	**CM040**		**B14**
	47	17	2.8	30	**CM040**		**B14**
	35	21	2.0	40	**CM040**		**B14**
	28	25	1.6	50	**CM040**		**B14**
	23	28	1.3	60	**CM040**		**B14**
	23	34	1.7	60		**CMP056/040**	**B14**
	19	40	1.3	75		**CMP056/040**	**B14**
	18	34	1.0	80	**CM040**		**B14**

0.12 - IEC 56

SMT5044	**16**	45	1.6	90		**CMP056/040**	**B14**
SMT5634	**14**	38	0.8	100	**CM040**		**B14**
SMT5634IE2	**12**	56	1.1	120		**CMP056/040**	**B14**
SMM5634	**9**	64	1.0	150		**CMP056/040**	**B14**
(1400 min^{-1})							

0.12 - IEC 63

TS6314	**280**	4	5.1	5	**CM030**		**B5/B14**
(1400 min^{-1})	**187**	5	3.8	7.5	**CM030**		**B5/B14**
	140	7	3.1	10	**CM030**		**B5/B14**
	93	10	2.2	15	**CM030**		**B5/B14**
	70	12	1.5	20	**CM030**		**B5/B14**
	56	15	1.4	25	**CM030**		**B5/B14**
	47	16	1.3	30	**CM030**		**B5/B14**
	35	20	1.0	40	**CM030**		**B5/B14**
	28	24	0.8	50	**CM030**		**B5/B14**
	280	4	11.4	5	**CM040**		**B5/B14**
	187	5	8.3	7.5	**CM040**		**B5/B14**
	140	7	6.5	10	**CM040**		**B5/B14**
	93	10	4.5	15	**CM040**		**B5/B14**
	70	13	3.1	20	**CM040**		**B5/B14**
	56	15	2.5	25	**CM040**		**B5/B14**
	47	17	2.8	30	**CM040**		**B5/B14**
	35	21	2.0	40	**CM040**		**B5/B14**
	28	25	1.6	50	**CM040**		**B5/B14**
	23	28	1.3	60	**CM040**		**B5/B14**
	23	34	1.7	60		**CMP063/040**	**B14**
	19	40	1.3	75		**CMP063/040**	**B14**
	18	34	1.0	80	**CM040**		**B5/B14**
	16	45	1.6	90		**CMP063/040**	**B14**
	14	38	0.8	100	**CM040**		**B5/B14**
	12	56	1.1	120		**CMP063/040**	**B14**
	35	22	3.5	40	**CM050**		**B5/B14**
	28	26	2.8	50	**CM050**		**B5/B14**
	23	29	2.3	60	**CM050**		**B5/B14**
	23	34	3.0	60		**CMP063/050**	**B14**
	19	40	2.3	75		**CMP063/050**	**B14**
	18	35	1.7	80	**CM050**		**B5/B14**
	16	47	2.7	90		**CMP063/050**	**B14**
	14	40	1.4	100	**CM050**		**B5/B14**
	12	57	1.9	120		**CMP063/050**	**B14**
	9.3	66	1.6	150		**CMP063/050**	**B14**
	7.8	74	1.3	180		**CMP063/050**	**B14**
	5.8	85	1.0	240		**CMP063/050**	**B14**
	14	43	2.7	100	**CM063**		**B5**
	9.3	69	2.8	150		**CMP063/063**	**B14**
	7.8	77	2.3	180		**CMP063/063**	**B14**
	5.8	90	1.7	240		**CMP063/063**	**B14**
	4.7	101	1.4	300		**CMP063/063**	**B14**

Motori *Motors*	SMT		SMM		TS	
	5034 5044	5624 5634 5634IE2	5034	5624 5634	5624	6314
IEC	56 B14	56 B14	56 B14	56 B14	56 B5/B14	63 B5/B14

Dati tecnici

Technical data

0.18 - IEC 56

	P_1 [kW]	n_2 [min^{-1}]	M_2 [Nm]	sf	i			IEC
SMT5644	**280**	5.3	2.4	5	**CM026**		**B14**
SMM5644	**187**	7.7	1.8	7.5	**CM026**		**B14**
(1400 min^{-1})	**140**	10	1.4	10	**CM026**		**B14**
	93	14	1.0	15	**CM026**		**B14**
SMT SMM	**70**	18	0.8	20	**CM026**		**B14**
	280	5	3.4	5	**CM030**		**B14**
	187	8	2.6	7.5	**CM030**		**B14**
	140	10	2.0	10	**CM030**		**B14**
	93	15	1.4	15	**CM030**		**B14**
	70	18	1.0	20	**CM030**		**B14**
	56	22	0.9	25	**CM030**		**B14**
	47	25	0.9	30	**CM030**		**B14**
	280	5	7.6	5	**CM040**		**B14**
	187	8	5.6	7.5	**CM040**		**B14**
	140	10	4.4	10	**CM040**		**B14**
	93	15	3.0	15	**CM040**		**B14**
	70	19	2.1	20	**CM040**		**B14**
	56	23	1.7	25	**CM040**		**B14**
	47	26	1.9	30	**CM040**		**B14**
	35	32	1.3	40	**CM040**		**B14**
	28	37	1.1	50	**CM040**		**B14**
	23	43	0.8	60	**CM040**		**B14**
	23	51	1.1	60		**CMP056/040**	**B14**
	19	60	0.9	75		**CMP056/040**	**B14**
	16	68	1.0	90		**CMP056/040**	**B14**

0.18 - IEC 63

	P_1 [kW]	n_2 [min^{-1}]	M_2 [Nm]	sf	i			IEC
SMT6324	**280**	5	3.4	5	**CM030**		**B5/B14**
SMT6324IE2	**187**	8	2.6	7.5	**CM030**		**B5/B14**
SMM6324	**140**	10	2.0	10	**CM030**		**B5/B14**
(1400 min^{-1})	**93**	15	1.4	15	**CM030**		**B5/B14**
	70	18	1.0	20	**CM030**		**B5/B14**
SMT SMM	**56**	22	0.9	25	**CM030**		**B5/B14**
	47	25	0.9	30	**CM030**		**B5/B14**
TS6324-B14							
TS6324-B5	**280**	5	7.6	5	**CM040**		**B5/B14**
T2A6324-B14	**187**	8	5.6	7.5	**CM040**		**B5/B14**
T2A6324-B5	**140**	10	4.4	10	**CM040**		**B5/B14**
(1400 min^{-1})	**93**	15	3.0	15	**CM040**		**B5/B14**
	70	19	2.1	20	**CM040**		**B5/B14**
	56	23	1.7	25	**CM040**		**B5/B14**
	47	26	1.9	30	**CM040**		**B5/B14**
	35	32	1.3	40	**CM040**		**B5/B14**
	28	37	1.1	50	**CM040**		**B5/B14**
	23	43	0.8	60	**CM040**		**B5/B14**
	23	51	1.1	60		**CMP063/040**	**B14**
	19	60	0.9	75		**CMP063/040**	**B14**
	16	68	1.0	90		**CMP063/040**	**B14**

0.18 - IEC 63

	P_1 [kW]	n_2 [min^{-1}]	M_2 [Nm]	sf	i			IEC
SMT6324	**35**	33	2.3	40	**CM050**		**B5/B14**
SMT6324IE2	**28**	39	1.9	50	**CM050**		**B5/B14**
SMM6324	**23**	44	1.6	60	**CM050**		**B5/B14**
(1400 min^{-1})	**23**	51	2.0	60		**CMP063/050**	**B14**
	19	60	1.5	75		**CMP063/050**	**B14**
SMT SMM	**18**	53	1.1	80	**CM050**		**B5/B14**
	16	70	1.8	90		**CMP063/050**	**B14**
TS6324-B14	**14**	60	0.9	100	**CM050**		**B5/B14**
TS6324-B5	**12**	85	1.3	120		**CMP063/050**	**B14**
T2A6324-B14	**9.3**	99	1.0	150		**CMP063/050**	**B14**
T2A6324-B5	**7.8**	110	0.9	180		**CMP063/050**	**B14**
(1400 min^{-1})							
	23	46	2.7	60	**CM063**		**B5**
	23	53	3.6	60		**CMP063/063**	**B14**
	19	63	2.7	75		**CMP063/063**	**B14**
	18	56	2.1	80	**CM063**		**B5**
	16	69	3.4	90		**CMP063/063**	**B14**
	14	64	1.8	100	**CM063**		**B5**
	12	87	2.4	120		**CMP063/063**	**B14**
	9.3	103	1.9	150		**CMP063/063**	**B14**
	7.8	115	1.6	180		**CMP063/063**	**B14**
	5.8	136	1.1	240		**CMP063/063**	**B14**
	4.7	152	0.9	300		**CMP063/063**	**B14**

0.25 - IEC 56

	P_1 [kW]	n_2 [min^{-1}]	M_2 [Nm]	sf	i			IEC
SMT5654	**280**	7	1.8	5	**CM026**		**B14**
(1400 min^{-1})	**187**	11	1.3	8	**CM026**		**B14**
	140	14	1.0	10	**CM026**		**B14**
SMT SMM							
	280	7.3	2.5	5	**CM030**		**B14**
	187	11	1.8	7.5	**CM030**		**B14**
	140	14	1.5	10	**CM030**		**B14**
	93	20	1.0	15	**CM030**		**B14**
	280	8	5.5	5	**CM040**		**B14**
	187	11	4.0	7.5	**CM040**		**B14**
	140	14	3.1	10	**CM040**		**B14**
	93	21	2.2	15	**CM040**		**B14**
	70	27	1.5	20	**CM040**		**B14**
	56	32	1.2	25	**CM040**		**B14**
	47	36	1.3	30	**CM040**		**B14**
	35	44	0.9	40	**CM040**		**B14**
	28	51	0.8	50	**CM040**		**B14**

IEC

Motori *Motors*	SMT		SMM		TS	T2A
	5644 5654	6324 6324IE2	5644	6324	6324	6324
IEC	56 B14	63 B14	56 B14	63 B14	63 B5/B14	63 B5/B14

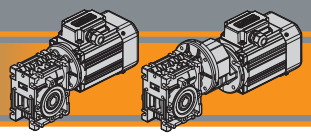

Dati tecnici

Technical data

0.25 - IEC 63

	P_1 [kW]	n_2 [min^{-1}]	M_2 [Nm]	sf	i			IEC
SMT6334	280	7.3	2.5	5	CM030		B5/B14
SMT6334IE2	187	11	1.8	7.5	CM030		B5/B14
SMM6334	140	14	1.5	10	CM030		B5/B14
(1400 min^{-1})	93	20	1.0	15	CM030		B5/B14
SMT SMM	280	7.5	5.5	5	CM040		B5/B14
	187	11	4.0	7.5	CM040		B5/B14
TS6334-B14	140	14	3.1	10	CM040		B5/B14
TS6334-B5	93	21	2.2	15	CM040		B5/B14
T2A6334-B14	70	27	1.5	20	CM040		B5/B14
T2A6334-B5	56	32	1.2	25	CM040		B5/B14
(1400 min^{-1})	47	36	1.3	30	CM040		B5/B14
	35	44	0.9	40	CM040		B5/B14
	28	51	0.8	50	CM040		B5/B14
	70	27	2.7	20	CM050		B5/B14
	56	32	2.2	25	CM050		B5/B14
	47	37	2.4	30	CM050		B5/B14
	35	46	1.7	40	CM050		B5/B14
	28	54	1.3	50	CM050		B5/B14
	23	61	1.1	60	CM050		B5/B14
	23	71	1.4	60		CMP063/050	B14
	19	84	1.1	75		CMP063/050	B14
	18	74	0.8	80	CM050		B5/B14
	16	98	1.3	90		CMP063/050	B14
	28	56	2.4	50	CM063		B5
	23	64	2.0	60	CM063		B5
	23	73	2.6	60		CMP063/063	B14
	19	88	2.0	75		CMP063/063	B14
	18	78	1.5	80	CM063		B5
	16	96	2.4	90		CMP063/063	B14
	14	89	1.3	100	CM063		B5
	12	120	1.7	120		CMP063/063	B14
	9.3	143	1.3	150		CMP063/063	B14
	7.8	159	1.1	180		CMP063/063	B14

0.25 - IEC 71

	P_1 [kW]	n_2 [min^{-1}]	M_2 [Nm]	sf	i			IEC
TS7114	280	7.5	5.5	5	CM040		B5/B14
(1400 min^{-1})	187	11	4.0	7.5	CM040		B5/B14
	140	14	3.1	10	CM040		B5/B14
	93	21	2.2	15	CM040		B5/B14
	70	27	1.5	20	CM040		B5/B14
	56	32	1.2	25	CM040		B5/B14
	47	36	1.3	30	CM040		B5/B14
	35	44	0.9	40	CM040		B5/B14

0.25 - IEC 71

	P_1 [kW]	n_2 [min^{-1}]	M_2 [Nm]	sf	i			IEC
TS7114	70	27	2.7	20	CM050		B5/B14
(1400 min^{-1})	56	32	2.2	25	CM050		B5/B14
	47	37	2.4	30	CM050		B5/B14
	35	46	1.7	40	CM050		B5/B14
	28	54	1.3	50	CM050		B5/B14
	23	61	1.1	60	CM050		B5/B14
	23	71	1.4	60		CMP071/050	B14
	19	84	1.1	75		CMP071/050	B14
	18	74	0.8	80	CM050		B5/B14
	16	98	1.3	90		CMP071/050	B14
	28	56	2.4	50	CM063		B5
	23	64	2.0	60	CM063		B5
	23	73	2.6	60		CMP071/063	B14
	19	88	2.0	75		CMP071/063	B14
	18	78	1.5	80	CM063		B5
	16	96	2.4	90		CMP071/063	B14
	14	89	1.3	100	CM063		B5
	12	120	1.7	120		CMP071/063	B14
	9.3	143	1.3	150		CMP071/063	B14
	7.8	159	1.1	180		CMP071/063	B14
	18	82	1.9	80	CM070		B5
	16	99	3.1	90		CMP071/070	B14
	14	90	1.7	100	CM070		B5
	12	122	2.2	120		CMP071/070	B14
	9.3	143	1.8	150		CMP071/070	B14
	7.8	159	1.4	180		CMP071/070	B14
	5.8	189	1.1	240		CMP071/070	B14
	4.7	211	1.0	300		CMP071/070	B14
	18	82	2.4	80	CM075		B5
	16	101	4.0	90		CMP071/075	B14
	14	96	1.9	100	CM075		B5
	12	124	2.9	120		CMP071/075	B14
	9.3	145	2.3	150		CMP071/075	B14
	7.8	162	1.9	180		CMP071/075	B14
	5.8	193	1.4	240		CMP071/075	B14
	4.7	216	1.1	300		CMP071/075	B14
	7.8	177	2.8	180		CMP071/090	B14
	5.8	209	2.2	240		CMP071/090	B14
	4.7	236	1.7	300		CMP071/090	B14

IEC

Motori *Motors*	SMT	SMM	TS		T2A
	6334 6334IE2	6334	6334	7114	6334
IEC	63 B14	63 B14	63 B5/B14	71 B5/B14	63 B5/B14

Dati tecnici

Technical data

0.37 - IEC 63

	P_1 [kW]	n_2 [min^{-1}]	M_2 [Nm]	sf	i			IEC
SMT6344	280	11	1.7	5	CM030		B14
(1400 min^{-1})	187	16	1.2	7.5	CM030		B14
	140	21	1.0	10	CM030		B14
SMT SMM							
	280	11	3.7	5	CM040		B14
	187	16	2.7	7.5	CM040		B14
	140	21	2.1	10	CM040		B14
	93	31	1.5	15	CM040		B14
	70	39	1.0	20	CM040		B14
	56	47	0.8	25	CM040		B14
	47	53	0.9	30	CM040		B14
	93	31	2.6	15	CM050		B14
	70	40	1.8	20	CM050		B14
	56	48	1.5	25	CM050		B14
	47	55	1.6	30	CM050		B14
	35	68	1.1	40	CM050		B14
	28	80	0.9	50	CM050		B14
	23	91	0.8	60	CM050		B14
	23	105	1.0	60		CMP063/050	B14
	16	145	0.9	90		CMP063/050	B14
	23	108	1.7	60		CMP063/063	B14
	19	130	1.3	75		CMP063/063	B14
	16	142	1.6	90		CMP063/063	B14
	12	178	1.2	120		CMP063/063	B14
	9.3	211	0.9	150		CMP063/063	B14

0.37 - IEC 71

	P_1 [kW]	n_2 [min^{-1}]	M_2 [Nm]	sf	i			IEC
SMT7124	280	11	3.7	5	CM040		B5/B14
SMT7124IE2	187	16	2.7	7.5	CM040		B5/B14
SMM7124	140	21	2.1	10	CM040		B5/B14
(1400 min^{-1})	93	31	1.5	15	CM040		B5/B14
SMT SMM	70	39	1.0	20	CM040		B5/B14
	56	47	0.8	25	CM040		B5/B14
	47	53	0.9	30	CM040		B5/B14
TS7124-B14							
TS7124-B5	93	31	2.6	15	CM050		B5/B14
T2A7124-B14	70	40	1.8	20	CM050		B5/B14
T2A7124-B5	56	48	1.5	25	CM050		B5/B14
(1400 min^{-1})	47	55	1.6	30	CM050		B5/B14
	35	68	1.1	40	CM050		B5/B14
	28	80	0.9	50	CM050		B5/B14
	23	91	0.8	60	CM050		B5/B14
	23	105	1.0	60		CMP071/050	B14
	16	145	0.9	90		CMP071/050	B14

0.37 - IEC 71

	P_1 [kW]	n_2 [min^{-1}]	M_2 [Nm]	sf	i			IEC
SMT7124	35	71	2.0	40	CM063		B5/B14
SMT7124IE2	28	83	1.6	50	CM063		B5/B14
SMM7124	23	95	1.3	60	CM063		B5/B14
(1400 min^{-1})	23	108	1.7	60		CMP071/063	B14
SMT SMM	19	130	1.3	75		CMP071/063	B14
	18	115	1.0	80	CM063		B5/B14
	16	142	1.6	90		CMP071/063	B14
TS7124-B14	14	131	0.9	100	CM063		B5/B14
TS7124-B5	12	178	1.2	120		CMP071/063	B14
T2A7124-B14	9.3	211	0.9	150		CMP071/063	B14
T2A7124-B5							
(1400 min^{-1})	28	86	2.2	50	CM070		B5
	23	98	1.8	60	CM070		B5
	23	110	2.6	60		CMP071/070	B14
	19	132	1.9	75		CMP071/070	B14
	18	121	1.3	80	CM070		B5
	16	147	2.3	90		CMP071/070	B14
	14	134	1.2	100	CM070		B5
	12	181	1.7	120		CMP071/070	B14
	9.3	211	1.3	150		CMP071/070	B14
	7.8	236	1.1	180		CMP071/070	B14
	28	87	2.6	50	CM075		B5
	23	100	2.2	60	CM075		B5
	23	111	3.0	60		CMP071/075	B14
	19	134	2.2	75		CMP071/075	B14
	18	121	1.6	80	CM075		B5
	16	149	2.7	90		CMP071/075	B14
	14	141	1.3	100	CM075		B5
	12	184	2.0	120		CMP071/075	B14
	9.3	215	1.5	150		CMP071/075	B14
	7.8	240	1.3	180		CMP071/075	B14
	5.8	285	0.9	240		CMP071/075	B14
	18	129	2.5	80	CM090		B5
	14	151	2.0	100	CM090		B5
	12	193	3.2	120		CMP071/090	B14
	9.3	226	2.4	150		CMP071/090	B14
	7.8	263	1.9	180		CMP071/090	B14
	5.8	309	1.5	240		CMP071/090	B14
	4.7	349	1.2	300		CMP071/090	B14

IEC

Motori *Motors*	SMT		SMM	TS	T2A
	6344	7124 7124IE2	7124	7124	7124
IEC	63 B14	71 B14	71 B14	71 B5/B14	71 B5/B14

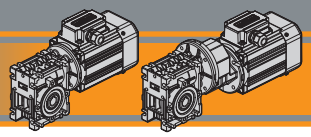

Dati tecnici — *Technical data*

0.55 - IEC 71

	P_1 [kW]	n_2 [min^{-1}]	M_2 [Nm]	sf	i			IEC
SMT7134	280	17	2.5	5	CM040		B5/B14
SMT7134IE2	187	24	1.8	7.5	CM040		B5/B14
SMM7124	140	32	1.4	10	CM040		B5/B14
(1400 min^{-1})	93	46	1.0	15	CM040		B5/B14
SMT SMM							
	140	32	2.6	10	CM050		B5/B14
	93	46	1.8	15	CM050		B5/B14
TS7134-B14	70	59	1.2	20	CM050		B5/B14
TS7134-B5	56	71	1.0	25	CM050		B5/B14
T2A7134-B14	47	81	1.1	30	CM050		B5/B14
T2A7134-B5	35	101	0.8	40	CM050		B5/B14
(1400 min^{-1})							
	70	61	2.2	20	CM063		B5/B14
	56	73	1.8	25	CM063		B5/B14
	47	84	2.0	30	CM063		B5/B14
	35	105	1.4	40	CM063		B5/B14
	28	124	1.1	50	CM063		B5/B14
	23	142	0.9	60	CM063		B5/B14
	23	161	1.2	60		CMP071/063	B14
	19	193	0.9	75		CMP071/063	B14
	16	212	1.1	90		CMP071/063	B14
	56	75	2.4	25	CM070		B5
	35	108	1.9	40	CM070		B5
	28	128	1.5	50	CM070		B5
	23	146	1.2	60	CM070		B5
	23	163	1.7	60		CMP071/070	B14
	19	196	1.3	75		CMP071/070	B14
	18	180	0.9	80	CM070		B5
	16	218	1.6	90		CMP071/070	B14
	12	269	1.1	120		CMP071/070	B14
	9.3	314	0.9	150		CMP071/070	B14
	35	110	2.3	40	CM075		B5
	28	129	1.8	50	CM075		B5
	23	149	1.5	60	CM075		B5
	23	165	2.0	60		CMP071/075	B14
	19	199	1.5	75		CMP071/075	B14
	18	180	1.1	80	CM075		B5
	16	222	1.8	90		CMP071/075	B14
	14	210	0.9	100	CM075		B5
	12	274	1.3	120		CMP071/075	B14
	9.3	320	1.0	150		CMP071/075	B14
	7.8	357	0.9	180		CMP071/075	B14
	18	192	1.7	80	CM090		B5
	16	232	3.0	90		CMP071/090	B14
	14	225	1.3	100	CM090		B5
	12	287	2.2	120		CMP071/090	B14
	9.3	336	1.6	150		CMP071/090	B14
	7.8	390	1.3	180		CMP071/090	B14
	5.8	459	1.0	240		CMP071/090	B14

0.55 - IEC 80

	P_1 [kW]	n_2 [min^{-1}]	M_2 [Nm]	sf	i			IEC
TS8014	140	32	2.6	10	CM050		B5/B14
T2A8014	93	46	1.8	15	CM050		B5/B14
(1400 min^{-1})	70	59	1.2	20	CM050		B5/B14
	56	71	1.0	25	CM050		B5/B14
	47	81	1.1	30	CM050		B5/B14
	70	61	2.2	20	CM063		B5/B14
	56	73	1.8	25	CM063		B5/B14
	47	84	2.0	30	CM063		B5/B14
	35	105	1.4	40	CM063		B5/B14
	28	124	1.1	50	CM063		B5/B14
	23	142	0.9	60	CM063		B5/B14
	23	161	1.2	60		CMP080/063	B14
	19	193	0.9	75		CMP080/063	B14
	16	212	1.1	90		CMP080/063	B14
	56	75	2.4	25	CM070		B5/B14
	35	108	1.9	40	CM070		B5/B14
	28	128	1.5	50	CM070		B5/B14
	23	146	1.2	60	CM070		B5/B14
	23	163	1.7	60		CMP080/070	B14
	19	196	1.3	75		CMP080/070	B14
	18	180	0.9	80	CM070		B5/B14
	16	218	1.6	90		CMP080/070	B14
	12	269	1.1	120		CMP080/070	B14
	35	110	2.3	40	CM075		B5/B14
	28	129	1.8	50	CM075		B5/B14
	23	149	1.5	60	CM075		B5/B14
	23	165	2.0	60		CMP080/075	B14
	19	199	1.5	75		CMP080/075	B14
	18	180	1.1	80	CM075		B5/B14
	16	222	1.8	90		CMP080/075	B14
	14	210	0.9	100	CM075		B5/B14
	12	274	1.3	120		CMP080/075	B14
	9.3	320	1.0	150		CMP080/075	B14
	18	192	1.7	80	CM090		B5/B14
	16	232	3.0	90		CMP080/090	B14
	14	225	1.3	100	CM090		B5/B14
	12	287	2.2	120		CMP080/090	B14
	9.3	336	1.6	150		CMP080/090	B14
	7.8	390	1.3	180		CMP080/090	B14
	5.8	459	1.0	240		CMP080/090	B14
	18	204	2.8	80	CM110		B5
	14	240	2.2	100	CM110		B5
	9.3	358	2.8	150		CMP080/110	B14
	7.8	410	2.2	180		CMP080/110	B14
	5.8	503	1.5	240		CMP080/110	B14
	4.7	574	1.2	300		CMP080/110	B14

IEC

Motori *Motors*	SMT	SMM	TS		T2A	
	7134 7134IE2	7134	7134	8014	7134	8014
IEC	71 B14	71 B14	71 B5/B14	80 B5/B14	71 B5/B14	80 B5/B14

Dati tecnici — *Technical data*

0.55 - IEC 80

P_1 [kW]	n_2 [min^{-1}]	M_2 [Nm]	sf	i			IEC
TS8014	**7.8**	424	2.6	180		**CMP080/130**	**B14**
T2A8014	**5.8**	512	1.9	240		**CMP080/130**	**B14**
(1400 min^{-1})	**4.7**	585	1.5	300		**CMP080/130**	**B14**

0.75 - IEC 71

P_1 [kW]	n_2 [min^{-1}]	M_2 [Nm]	sf	i			IEC
SMT7144	**280**	23	1.8	5	**CM040**		**B5/B14**
(1400 min^{-1})	**187**	33	1.3	7.5	**CM040**		**B5/B14**
	**140**	43	1.0	10	**CM040**		**B5/B14**
	280	23	3.3	5	**CM050**		**B5/B14**
TS7144-B14	**187**	33	2.4	7.5	**CM050**		**B5/B14**
TS7144-B5	**140**	43	1.9	10	**CM050**		**B5/B14**
(1400 min^{-1})	**93**	63	1.3	15	**CM050**		**B5/B14**
	70	81	0.9	20	**CM050**		**B5/B14**
	47	111	0.8	30	**CM050**		**B5/B14**
	93	64	2.4	15	**CM063**		**B5/B14**
	70	83	1.6	20	**CM063**		**B5/B14**
	56	100	1.4	25	**CM063**		**B5/B14**
	47	115	1.4	30	**CM063**		**B5/B14**
	35	143	1.0	40	**CM063**		**B5/B14**
	28	169	0.8	50	**CM063**		**B5/B14**
	23	220	0.9	60		**CMP071/063**	**B14**
	56	102	1.8	25	**CM070**		**B5**
	47	118	2.1	30	**CM070**		**B5**
	35	149	1.4	40	**CM070**		**B5**
	28	177	1.1	50	**CM070**		**B5**
	23	203	0.9	60	**CM070**		**B5**
	23	223	1.3	60		**CMP071/070**	**B14**
	19	267	0.9	75		**CMP071/070**	**B14**
	16	298	1.1	90		**CMP071/070**	**B14**
	35	149	1.7	40	**CM075**		**B5**
	28	177	1.3	50	**CM075**		**B5**
	23	203	1.1	60	**CM075**		**B5**
	23	226	1.5	60		**CMP071/075**	**B14**
	19	271	1.1	75		**CMP071/075**	**B14**
	18	246	0.8	80	**CM075**		**B5**
	16	302	1.3	90		**CMP071/075**	**B14**
	12	373	1.0	120		**CMP071/075**	**B14**

0.75 - IEC 71

P_1 [kW]	n_2 [min^{-1}]	M_2 [Nm]	sf	i			IEC
SMT7144	**28**	184	2.1	50	**CM090**		**B5**
(1400 min^{-1})	**23**	212	1.6	60	**CM090**		**B5**
	**23**	235	2.4	60		**CMP071/090**	**B14**
	19	282	1.8	75		**CMP071/090**	**B14**
	18	262	1.2	80	**CM090**		**B5**
TS7144-B14	**16**	316	2.2	90		**CMP071/090**	**B14**
TS7144-B5	**14**	307	1.0	100	**CM090**		**B5**
(1400 min^{-1})	**12**	391	1.6	120		**CMP071/090**	**B14**
	9.3	459	1.2	150		**CMP071/090**	**B14**
	7.8	535	0.9	180		**CMP071/090**	**B14**

0.75 - IEC 80

P_1 [kW]	n_2 [min^{-1}]	M_2 [Nm]	sf	i			IEC
SMT8024 IE3	**280**	23	3.3	5	**CM050**		**B5/B14**
SMM8024	**187**	33	2.4	7.5	**CM050**		**B5/B14**
(1400 min^{-1})	**140**	43	1.9	10	**CM050**		**B5/B14**
	93	63	1.3	15	**CM050**		**B5/B14**
	**70**	81	0.9	20	**CM050**		**B5/B14**
	47	111	0.8	30	**CM050**		**B5/B14**
TS8024-B14							
TS8024-B5	**93**	64	2.4	15	**CM063**		**B5/B14**
T3A8024-B14	**70**	83	1.6	20	**CM063**		**B5/B14**
T3A8024-B5	**56**	100	1.4	25	**CM063**		**B5/B14**
(1400 min^{-1})	**47**	115	1.4	30	**CM063**		**B5/B14**
	35	143	1.0	40	**CM063**		**B5/B14**
	28	169	0.8	50	**CM063**		**B5/B14**
	23	220	0.9	60		**CMP080/063**	**B14**
	70	85	2.4	20	**CM070**		**B5/B14**
	56	102	1.8	25	**CM070**		**B5/B14**
	47	118	2.1	30	**CM070**		**B5/B14**
	35	149	1.4	40	**CM070**		**B5/B14**
	28	177	1.1	50	**CM070**		**B5/B14**
	23	203	0.9	60	**CM070**		**B5/B14**
	23	223	1.3	60		**CMP080/070**	**B14**
	19	267	0.9	75		**CMP080/070**	**B14**
	16	298	1.1	90		**CMP080/070**	**B14**
	70	85	2.8	20	**CM075**		**B5/B14**
	56	102	2.2	25	**CM075**		**B5/B14**
	47	118	2.4	30	**CM075**		**B5/B14**
	35	149	1.7	40	**CM075**		**B5/B14**
	28	177	1.3	50	**CM075**		**B5/B14**
	23	203	1.1	60	**CM075**		**B5/B14**
	23	226	1.5	60		**CMP080/075**	**B14**
	19	271	1.1	75		**CMP080/075**	**B14**
	18	246	0.8	80	**CM075**		**B5/B14**
	16	302	1.3	90		**CMP080/075**	**B14**
	12	373	1.0	120		**CMP080/075**	**B14**

IEC

Motori *Motors*	SMT		SMM	TS		T3A
	7144	8024 IE3	8024	7144	8014 8024	8024
IEC	71 B14	80 B14	80 B14	71 B5/B14	80 B5/B14	80 B5/B14

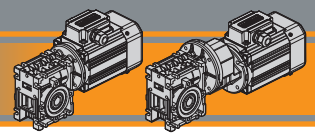

Dati tecnici — *Technical data*

0.75 - IEC 80

P_1 [kW]	n_2 [min^{-1}]	M_2 [Nm]	sf	i			IEC
SMT8024 IE3	**35**	156	2.8	40	**CM090**		B5/B14
SMM8024	**28**	184	2.1	50	**CM090**		B5/B14
(1400 min^{-1})	**23**	212	1.6	60	**CM090**		B5/B14
SMT SMM	**23**	235	2.4	60		**CMP080/090**	B14
	19	282	1.8	75		**CMP080/090**	B14
	18	262	1.2	80	**CM090**		B5/B14
TS8024-B14	**16**	316	2.2	90		**CMP080/090**	B14
TS8024-B5	**14**	307	1.0	100	**CM090**		B5/B14
T3A8024-B14	**12**	391	1.6	120		**CMP080/090**	B14
T3A8024-B5	**9.3**	459	1.2	150		**CMP080/090**	B14
(1400 min^{-1})	**7.8**	535	0.9	180		**CMP080/090**	B14
	23	224	2.8	60	**CM110**		B5
	19	293	3.1	75		**CMP080/110**	B14
	18	278	2.0	80	**CM110**		B5
	16	325	3.5	90		**CMP080/110**	B14
	14	327	1.6	100	**CM110**		B5
	12	415	2.6	120		**CMP080/110**	B14
	9.3	489	2.0	150		**CMP080/110**	B14
	7.8	560	1.6	180		**CMP080/110**	B14
	5.8	686	1.1	240		**CMP080/110**	B14
	4.7	782	0.9	300		**CMP080/110**	B14
	14	327	2.2	100	**CM130**		B5
	9.3	504	2.4	150		**CMP080/130**	B14
	7.8	578	1.9	180		**CMP080/130**	B14
	5.8	698	1.4	240		**CMP080/130**	B14
	4.7	797	1.1	300		**CMP080/130**	B14

1.1 - IEC 80

P_1 [kW]	n_2 [min^{-1}]	M_2 [Nm]	sf	i			IEC
SMT8034 IE3	**280**	33	2.2	5	**CM050**		B5/B14
(1400 min^{-1})	**187**	49	1.6	7.5	**CM050**		B5/B14
	140	64	1.3	10	**CM050**		B5/B14
SMT SMM	**93**	92	0.9	15	**CM050**		B5/B14
TS8034-B14	**280**	34	4.0	5	**CM063**		B5/B14
TS8034-B5	**187**	50	2.9	7.5	**CM063**		B5/B14
T3A8034-B14	**140**	65	2.3	10	**CM063**		B5/B14
T3A8034-B5	**93**	95	1.6	15	**CM063**		B5/B14
(1400 min^{-1})	**70**	122	1.1	20	**CM063**		B5/B14
	56	146	0.9	25	**CM063**		B5/B14
	47	169	1.0	30	**CM063**		B5/B14
	93	95	2.3	15	**CM070**		B5/B14
	70	125	1.6	20	**CM070**		B5/B14
	56	150	1.2	25	**CM070**		B5/B14
	47	173	1.4	30	**CM070**		B5/B14
	35	219	1.0	40	**CM070**		B5/B14
	23	326	0.9	60		**CMP080/070**	B14

1.1 - IEC 80

P_1 [kW]	n_2 [min^{-1}]	M_2 [Nm]	sf	i			IEC
SMT8034 IE3	**70**	125	1.9	20	**CM075**		B5/B14
(1400 min^{-1})	**56**	150	1.5	25	**CM075**		B5/B14
	47	173	1.7	30	**CM075**		B5/B14
SMT SMM	**35**	219	1.1	40	**CM075**		B5/B14
	28	259	0.9	50	**CM075**		B5/B14
TS8034-B14	**23**	331	1.0	60		**CMP080/075**	B14
TS8034-B5	**19**	397	0.8	75		**CMP080/075**	B14
T3A8034-B14	**16**	443	0.9	90		**CMP080/075**	B14
T3A8034-B5							
(1400 min^{-1})	**35**	228	1.9	40	**CM090**		B5/B14
	28	270	1.4	50	**CM090**		B5/B14
	23	311	1.1	60	**CM090**		B5/B14
	23	344	1.7	60		**CMP080/090**	B14
	19	414	1.2	75		**CMP080/090**	B14
	18	384	0.8	80	**CM090**		B5/B14
	16	463	1.5	90		**CMP080/090**	B14
	12	574	1.1	120		**CMP080/090**	B14
	28	285	2.5	50	**CM110**		B5
	23	329	1.9	60	**CM110**		B5
	23	353	2.7	60		**CMP080/110**	B14
	19	430	2.1	75		**CMP080/110**	B14
	18	408	1.4	80	**CM110**		B5
	16	477	2.4	90		**CMP080/110**	B14
	14	480	1.1	100	**CM110**		B5
	12	609	1.8	120		**CMP080/110**	B14
	9.3	717	1.4	150		**CMP080/110**	B14
	7.8	821	1.1	180		**CMP080/110**	B14
	23	324	3.0	60	**CM130**		B5
	18	414	2.0	80	**CM130**		B5
	16	477	3.1	90		**CMP080/130**	B14
	14	480	1.5	100	**CM130**		B5
	12	600	2.3	120		**CMP080/130**	B14
	9.3	739	1.7	150		**CMP080/130**	B14
	7.8	847	1.3	180		**CMP080/130**	B14
	5.8	1024	0.9	240		**CMP080/130**	B14

1.1 - IEC 90

P_1 [kW]	n_2 [min^{-1}]	M_2 [Nm]	sf	i			IEC
TS90S4	**280**	34	4.0	5	**CM063**		B5/B14
T3A90S4	**187**	50	2.9	7.5	**CM063**		B5/B14
(1400 min^{-1})	**140**	65	2.3	10	**CM063**		B5/B14
	93	95	1.6	15	**CM063**		B5/B14
	70	122	1.1	20	**CM063**		B5/B14
	56	146	0.9	25	**CM063**		B5/B14
	47	169	1.0	30	**CM063**		B5/B14

IEC	SMT	SMM	TS		T3A	
Motori *Motors*	8024 IE3 8034 IE3	8024	8024 8034	90S4	8024 8034	90S4
IEC	80 B14	80 B14	80 B5/B14	80 B5/B14	80 B5/B14	90 B5/B14

Dati tecnici / *Technical data*

1.1 - IEC 90

P_1 [kW]	n_2 [min^{-1}]	M_2 [Nm]	sf	i			IEC
TS90S4	**93**	95	2.3	15	**CM070**		**B5/B14**
T3A90S4	**70**	125	1.6	20	**CM070**		**B5/B14**
(1400 min^{-1})	**56**	150	1.2	25	**CM070**		**B5/B14**
	47	173	1.4	30	**CM070**		**B5/B14**
	35	219	1.0	40	**CM070**		**B5/B14**
	23	326	0.9	60		**CMP090/070**	**B5/B14**
	70	125	1.9	20	**CM075**		**B5/B14**
	56	150	1.5	25	**CM075**		**B5/B14**
	47	173	1.7	30	**CM075**		**B5/B14**
	35	219	1.1	40	**CM075**		**B5/B14**
	28	259	0.9	50	**CM075**		**B5/B14**
	23	331	1.0	60		**CMP090/075**	**B5/B14**
	19	397	0.8	75		**CMP090/075**	**B5/B14**
	16	443	0.9	90		**CMP090/075**	**B5/B14**
	56	156	2.4	25	**CM090**		**B5/B14**
	47	178	2.7	30	**CM090**		**B5/B14**
	35	228	1.9	40	**CM090**		**B5/B14**
	28	270	1.4	50	**CM090**		**B5/B14**
	23	311	1.1	60	**CM090**		**B5/B14**
	23	344	1.7	60		**CMP090/090**	**B5/B14**
	19	414	1.2	75		**CMP090/090**	**B5/B14**
	18	384	0.8	80	**CM090**		**B5/B14**
	16	463	1.5	90		**CMP090/090**	**B5/B14**
	12	574	1.1	120		**CMP090/090**	**B5/B14**
	28	285	2.5	50	**CM110**		**B5/B14**
	23	329	1.9	60	**CM110**		**B5/B14**
	23	353	2.7	60		**CMP090/110**	**B5/B14**
	19	430	2.1	75		**CMP090/110**	**B5/B14**
	18	408	1.4	80	**CM110**		**B5/B14**
	16	477	2.4	90		**CMP090/110**	**B5/B14**
	14	480	1.1	100	**CM110**		**B5/B14**
	12	609	1.8	120		**CMP090/110**	**B5/B14**
	9.3	717	1.4	150		**CMP090/110**	**B5/B14**
	7.8	821	1.1	180		**CMP090/110**	**B5/B14**
	23	324	3.0	60	**CM130**		**B5**
	18	414	2.0	80	**CM130**		**B5**
	16	477	3.1	90		**CMP090/130**	**B5/B14**
	14	480	1.5	100	**CM130**		**B5/B14**
	12	600	2.3	120		**CMP090/130**	**B5/B14**
	9.3	739	1.7	150		**CMP090/130**	**B5/B14**
	7.8	847	1.3	180		**CMP090/130**	**B5/B14**
	5.8	1024	0.9	240		**CMP090/130**	**B5/B14**

1.5 - IEC 90

P_1 [kW]	n_2 [min^{-1}]	M_2 [Nm]	sf	i			IEC
SMT9024 IE3	**280**	46	2.9	5	**CM063**		**B5/B14**
(1400 min^{-1})	**187**	68	2.1	7.5	**CM063**		**B5/B14**
	140	88	1.7	10	**CM063**		**B5/B14**
	93	129	1.2	15	**CM063**		**B5/B14**
	70	166	0.8	20	**CM063**		**B5/B14**
TS90L14-B14							
TS90L14-B5	**140**	89	2.4	10	**CM070**		**B5/B14**
T3A90L14-B14	**93**	129	1.7	15	**CM070**		**B5/B14**
T3A90L14-B5	**70**	170	1.2	20	**CM070**		**B5/B14**
(1400 min^{-1})	**56**	205	0.9	25	**CM070**		**B5/B14**
	47	236	1.0	30	**CM070**		**B5/B14**
	93	129	2.1	15	**CM075**		**B5/B14**
	70	170	1.4	20	**CM075**		**B5/B14**
	56	205	1.1	25	**CM075**		**B5/B14**
	47	236	1.2	30	**CM075**		**B5/B14**
	35	299	0.8	40	**CM075**		**B5/B14**
	70	172	2.4	20	**CM090**		**B5/B14**
	56	212	1.7	25	**CM090**		**B5/B14**
	47	243	2.0	30	**CM090**		**B5/B14**
	35	311	1.4	40	**CM090**		**B5/B14**
	28	368	1.0	50	**CM090**		**B5/B14**
	23	424	0.8	60	**CM090**		**B5/B14**
	23	469	1.2	60		**CMP090/090**	**B14**
	19	564	0.9	75		**CMP090/090**	**B14**
	16	632	1.1	90		**CMP090/090**	**B14**
	35	323	2.4	40	**CM110**		**B5/B14**
	28	389	1.8	50	**CM110**		**B5/B14**
	23	448	1.4	60	**CM110**		**B5/B14**
	23	481	2.0	60		**CMP090/110**	**B14**
	19	587	1.5	75		**CMP090/110**	**B14**
	18	557	1.0	80	**CM110**		**B5/B14**
	14	655	0.8	100	**CM110**		**B5/B14**
	16	650	1.8	90		**CMP090/110**	**B14**
	12	830	1.3	120		**CMP090/110**	**B14**
	9	978	1.0	150		**CMP090/110**	**B14**
	28	389	2.5	50	**CM130**		**B5**
	23	448	2.0	60	**CM130**		**B5**
	19	579	2.1	75		**CMP090/130**	**B14**
	18	565	1.5	80	**CM130**		**B5**
	16	650	2.2	90		**CMP090/130**	**B14**
	14	655	1.1	100	**CM130**		**B5**
	12	818	1.5	120		**CMP090/130**	**B14**
	9	1008	1.2	150		**CMP090/130**	**B14**
	8	1155	0.9	180		**CMP090/130**	**B14**

Motori *Motors*	SMT	TS	T3A
	9024 IE3	90S4 90L14	90S4 90L14
IEC	90 B14	90 B5/B14	90 B5/B14

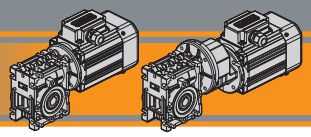

Dati tecnici

Technical data

2.2 - IEC 90

P_1 [kW]	n_2 [min^{-1}]	M_2 [Nm]	sf	i			IEC
SMT9034 IE3 (1400 min^{-1})	**280**	68	2.0	5	**CM063**		B5/B14
	187	99	1.5	7.5	**CM063**		B5/B14
	140	129	1.1	10	**CM063**		B5/B14
	93	189	0.8	15	**CM063**		B5/B14
TS90L24-B14	**187**	100	2.0	7.5	**CM070**		B5/B14
TS90L24-B5	**140**	131	1.7	10	**CM070**		B5/B14
T3A90LB4-B14	**93**	189	1.2	15	**CM070**		B5/B14
T3A90LB4-B5	**70**	249	0.8	20	**CM070**		B5/B14
(1400 min^{-1})							
	187	100	2.4	7.5	**CM075**		B5/B14
	140	131	2.0	10	**CM075**		B5/B14
	93	189	1.4	15	**CM075**		B5/B14
	70	249	1.0	20	**CM075**		B5/B14
	56	300	0.8	25	**CM075**		B5/B14
	47	347	0.8	30	**CM075**		B5/B14
	140	132	2.8	10	**CM090**		B5/B14
	93	194	2.2	15	**CM090**		B5/B14
	70	252	1.6	20	**CM090**		B5/B14
	56	311	1.2	25	**CM090**		B5/B14
	47	356	1.4	30	**CM090**		B5/B14
	35	456	1.0	40	**CM090**		B5/B14
	70	255	2.9	20	**CM110**		B5/B14
	56	315	2.1	25	**CM110**		B5/B14
	47	360	2.2	30	**CM110**		B5/B14
	35	474	1.6	40	**CM110**		B5/B14
	28	570	1.2	50	**CM110**		B5/B14
	23	657	1.0	60	**CM110**		B5/B14
	35	456	2.3	40	**CM130**		B5
	28	563	1.7	50	**CM130**		B5
	23	657	1.4	60	**CM130**		B5
	18	828	1.0	80	**CM130**		B5
	14	960	0.8	100	**CM130**		B5

2.2 - IEC 100

P_1 [kW]	n_2 [min^{-1}]	M_2 [Nm]	sf	i			IEC
TS100L14	**187**	100	2.0	7.5	**CM070**		B5/B14
T3A100L14	**140**	131	1.7	10	**CM070**		B5/B14
(1400 min^{-1})	**93**	189	1.2	15	**CM070**		B5/B14
	70	249	0.8	20	**CM070**		B5/B14
	187	100	2.4	7.5	**CM075**		B5/B14
	140	131	2.0	10	**CM075**		B5/B14
	93	189	1.4	15	**CM075**		B5/B14
	70	249	1.0	20	**CM075**		B5/B14
	56	300	0.8	25	**CM075**		B5/B14
	47	347	0.8	30	**CM075**		B5/B14

2.2 - IEC 100

P_1 [kW]	n_2 [min^{-1}]	M_2 [Nm]	sf	i			IEC
TS100L14	**140**	132	2.8	10	**CM090**		B5/B14
T3A100L14	**93**	194	2.2	15	**CM090**		B5/B14
(1400 min^{-1})	**70**	252	1.6	20	**CM090**		B5/B14
	56	311	1.2	25	**CM090**		B5/B14
	47	356	1.4	30	**CM090**		B5/B14
	35	456	1.0	40	**CM090**		B5/B14
	70	255	2.9	20	**CM110**		B5/B14
	56	315	2.1	25	**CM110**		B5/B14
	47	360	2.2	30	**CM110**		B5/B14
	35	474	1.6	40	**CM110**		B5/B14
	28	570	1.2	50	**CM110**		B5/B14
	23	657	1.0	60	**CM110**		B5/B14
	35	456	2.3	40	**CM130**		B5
	28	563	1.7	50	**CM130**		B5
	23	657	1.4	60	**CM130**		B5
	18	828	1.0	80	**CM130**		B5
	14	960	0.8	100	**CM130**		B5

3.0 - IEC 100

P_1 [kW]	n_2 [min^{-1}]	M_2 [Nm]	sf	i			IEC
T3A100L24-B5	**187**	137	1.5	7.5	**CM070**		B5
(1400 min^{-1})	**140**	178	1.2	10	**CM070**		B5
	93	258	0.9	15	**CM070**		B5
	187	137	1.7	7.5	**CM075**		B5
	140	178	1.4	10	**CM075**		B5
	93	258	1.0	15	**CM075**		B5
	187	138	2.5	7.5	**CM090**		B5
	140	180	2.1	10	**CM090**		B5
	93	264	1.6	15	**CM090**		B5
	70	344	1.2	20	**CM090**		B5
	56	425	0.9	25	**CM090**		B5
	47	485	1.0	30	**CM090**		B5
	35	622	0.8	40	**CM090**		B5
	93	264	2.7	15	**CM110**		B5
	70	348	2.1	20	**CM110**		B5
	56	430	1.6	25	**CM110**		B5
	47	491	1.6	30	**CM110**		B5
	35	647	1.2	40	**CM110**		B5
	28	778	0.9	50	**CM110**		B5
	47	485	2.2	30	**CM130**		B5
	35	622	1.7	40	**CM130**		B5
	28	767	1.3	50	**CM130**		B5
	23	896	1.0	60	**CM130**		B5

IEC	SMT	TS		T3A	
Motori *Motors*	**9034 IE3**	**90L24**	**100L14**	**90LB4**	**100L24**
IEC	**90 B14**	**90 B5/B14**	**100 B5/B14**	**90 B5/B14**	**100 B5**

Dati tecnici — *Technical data*

P_1 [kW]	n_2 [min^{-1}]	M_2 [Nm]	sf	i			IEC
4.0 - IEC 112							
T3A100L24-B5	**187**	182	1.1	7.5	**CM070**		B5
T3A112M4-B5	**140**	237	0.9	10	**CM070**		B5
(1400 min^{-1})							
	187	182	1.3	7.5	**CM075**		B5
	140	237	1.1	10	**CM075**		B5
	93	344	0.8	15	**CM075**		B5
	187	184	1.9	7.5	**CM090**		B5
	140	240	1.6	10	**CM090**		B5
	93	352	1.2	15	**CM090**		B5
	70	458	0.9	20	**CM090**		B5
	47	655	0.8	30	**CM090**		B5
	140	240	2.8	10	**CM110**		B5
	93	352	2.1	15	**CM110**		B5
	70	464	1.6	20	**CM110**		B5
	56	573	1.2	25	**CM110**		B5
	47	655	1.2	30	**CM110**		B5
	35	862	0.9	40	**CM110**		B5
	70	458	2.0	20	**CM130**		B5
	56	566	1.6	25	**CM130**		B5
	47	647	1.6	30	**CM130**		B5
	35	829	1.3	40	**CM130**		B5
	28	1023	0.9	50	**CM130**		B5
5.5 - IEC 132							
T3A132S4-B5	**187**	250	2.4	7.5	**CM110**		B5
(1400 min^{-1})	**140**	330	2.0	10	**CM110**		B5
	93	484	1.5	15	**CM110**		B5
	70	638	1.2	20	**CM110**		B5
	56	788	0.9	25	**CM110**		B5
	47	912	0.9	30	**CM110**		B5
	187	250	3.0	7.5	**CM130**		B5
	140	330	2.5	10	**CM130**		B5
	93	484	1.9	15	**CM130**		B5
	70	630	1.4	20	**CM130**		B5
	56	778	1.2	25	**CM130**		B5
	47	889	1.2	30	**CM130**		B5
	35	1141	0.9	40	**CM130**		B5

P_1 [kW]	n_2 [min^{-1}]	M_2 [Nm]	sf	i			IEC
7.5 - IEC 132							
T3A132M4-B5	**187**	341	1.8	7.5	**CM110**		B5
(1400 min^{-1})	**140**	450	1.5	10	**CM110**		B5
	93	660	1.1	15	**CM110**		B5
	70	870	0.9	20	**CM110**		B5
	187	341	2.2	7.5	**CM130**		B5
	140	450	1.8	10	**CM130**		B5
	93	660	1.4	15	**CM130**		B5
	70	860	1.1	20	**CM130**		B5
	56	1062	0.9	25	**CM130**		B5
	47	1213	0.9	30	**CM130**		B5

Motori *Motors*	T3A		
	100L24	112M4	132S4 132M4
IEC	100 B5	112 B5	132 B5

Dati tecnici elettrici — *Electrical technical data*

Si prega di consultare il paragrafo dedicato:

Please see the dedicated paragraph:

SMT SMM → N3 pag.

TS T2A T3A → T3 pag.

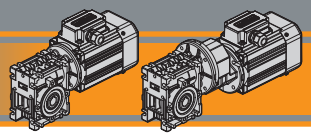

Motori applicabili

IEC Motor adapters

	SMT						SMM				
	5014 5024 5034 5044	5624 5634 5444 5654	6324 6334 6344	7124 7134 7144	8024 8034	9024 9034	5014 5024 5034	5624 5634 5654	6324 6334	7124 7134	8024
CM026	■	■					■	■			
CM030	■	■	■				■	■	■		
CM040	■	■	■	■			■	■	■	■	
CM050			■	■	■				■	■	■
CM063				■	■	■				■	■
CM070					■	■					■
CM075					■	■					■
CM090					■	■					■
CM110						■					
CM130											
CMP056/...	■	■					■	■			
CMP063/...			■						■		
CMP071/...				■						■	
CMP080/...					■						■
CMP090/...						■					

	TS						T2A			T3A				
	5624	6314 6324 6334	7114 7124 7134 7144	8024 8034	90S4 90L14 90L24	100L14	6324 6334	7124 7134	8014	8024 8034	90S4 90L14 90LB4	100L14 100L24 100L34	112M4	132S4 132M4
CM026	■													
CM030	■	■					■							
CM040	■	■	■				■	■						
CM050		■	■	■			■	■	■	■				
CM063		■	■	■	■		■	■	■	■	■			
CM070			■	■	■	■		■	■	■	■	■	■	
CM075			■	■	■	■		■	■	■	■	■	■	
CM090			■	■	■	■		■	■	■	■	■	■	
CM110				■	■	■			■	■	■	■	■	■
CM130				■	■	■			■	■	■	■	■	■
CMP056/...	■													
CMP063/...		■					■							
CMP071/...			■					■						
CMP080/...				■					■	■				
CMP090/...					■						■			

N.B. Le aree evidenziate in grigio indicano l'applicabilità della corrispondente grandezza motore.

N.B. *Grey areas indicate motor inputs available on each size of unit.*

Motori applicabili

IEC Motor adapters

	IEC	N	M	P	D	i											
						5	7.5	10	15	20	25	30	40	50	60	80	100
CM026	**56B14**	50	65	80	9												
CM030	**63B5**	95	115	140	11												
	63B14	60	75	90													
	56B5	80	100	120	9	**B**	**B**	**B**	**B**	**B**	**B**	**B**	**B**	**B**			
	56B14	50	65	80													
CM040	**71B5**	110	130	160	14												
	71B14	70	85	105													
	63B5	95	115	140	11	**B**	**B**	**B**	**B**	**B**	**B**	**B**	**B**				
	63B14	60	75	90													
	56B5	80	100	120	9	**BS**	**BS**	**BS**	**BS**	**BS**	**BS**	**BS**	**BS**	**B**	**B**	**B**	**B**
	56B14	50	65	80													
CM050	**80B5**	130	165	200	19												
	80B14	80	100	120													
	71B5	110	130	160	14	**B**	**B**	**B**	**B**	**B**	**B**	**B**					
	71B14	70	85	105													
	63B5	95	115	140	11	**BS**	**BS**	**BS**	**BS**	**BS**	**BS**	**BS**	**B**	**B**	**B**	**B**	
	63B14	60	75	90													
CM063	**90B5**	130	165	200	24												
	90B14	95	115	140													
	80B5	130	165	200	19	**B**	**B**	**B**	**B**	**B**	**B**	**B**					
	80B14	80	100	120													
	71B5	110	130	160	14	**BS**	**BS**	**BS**	**BS**	**BS**	**BS**	**BS**	**B**	**B**	**B**		
	71B14	70	85	105													
	63B5	95	115	140	11								**BS**	**BS**	**BS**	**B**	**B**
CM070	**100/112B5**	180	215	250	28												
	100/112B14	110	130	160													
	90B5	130	165	200	24		**B**	**B**	**B**	**B**							
	90B14	95	115	140													
	80B5	130	165	200	19		**BS**	**BS**	**BS**	**BS**	**B**	**B**	**B**				
	80B14	80	100	120													
	71B5	110	130	160	14						**BS**	**BS**	**BS**	**B**	**B**	**B**	**B**
CM075	**100/112B5**	180	215	250	28												
	100/112B14	110	130	160													
	90B5	130	165	200	24		**B**	**B**	**B**	**B**	**B**	**B**					
	90B14	95	115	140													
	80B5	130	165	200	19		**BS**	**BS**	**BS**	**BS**	**BS**	**BS**	**B**	**B**			
	80B14	80	100	120													
	71B5	110	130	160	14								**BS**	**BS**	**B**	**B**	**B**
CM090	**100/112B5**	180	215	250	28												
	100/112B14	110	130	160													
	90B5	130	165	200	24		**B**	**B**	**B**	**B**	**B**	**B**	**B**				
	90B14	95	115	140													
	80B5	130	165	200	19		**BS**	**BS**	**BS**	**BS**	**BS**	**BS**	**BS**	**B**	**B**	**B**	
	80B14	80	100	120													
	71B5	110	130	160	14									**BS**	**BS**	**BS**	**B**
CM110	**132B5**	230	265	300	38												
	132B14	130	165	200													
	100/112B5	180	215	250	28		**B**	**B**	**B**	**B**	**B**	**B**					
	100/112B14	110	130	160													
	90B5	130	165	200	24		**BS**	**BS**	**BS**	**BS**	**BS**	**BS**	**B**	**B**	**B**		
	90B14	95	115	140													
	80B5	130	165	200	19								**BS**	**BS**	**BS**	**B**	**B**
CM130	**132B5**	230	265	300	38												
	132B14	130	165	200													
	100/112B5	180	215	250	28		**B**	**B**	**B**	**B**	**B**	**B**	**B**				
	90B5	130	165	200	24		**BS**	**BS**	**BS**	**BS**	**BS**	**BS**	**BS**	**B**	**B**	**B**	**B**
	80B5	130	165	200	19									**BS**	**BS**	**BS**	**BS**

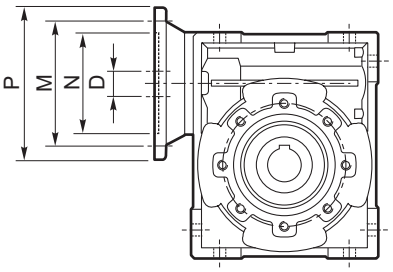

N.B.

Le aree evidenziate in grigio indicano l'applicabilità della corrispondente grandezza motore.

N.B. Grey areas indicate motor inputs available on each size of unit.

B/BS = Boccola di riduzione in acciaio

B/BS = Metal shaft sleeve

Nota: flange Nema disponibili a richiesta
Note: *Nema flange available on demand*

Motori applicabili

IEC Motor adapters

CMP	IEC	N	M	P	D	i (i_1 x i_2)							
						60 (3x20)	75 (3x25)	90 (3x30)	120 (3x40)	150 (3x50)	180 (3x60)	240 (3x80)	300 (3x100)
056/030	56 B14	50	65	80	9								
056/040						B	B	B	B				
063/040	63 B14	60	75	90	11								
063/050						B	B	B					
063/063						BS	BS	BS	B	B	B		
071/050	71 B14	70	85	105	14								
071/063						B	B	B					
071/070						BS	B	B	B				
071/075						BS	BS	BS	B	B			
071/090						BS	BS	BS	BS	B	B	B	
080/063	80 B14	80	100	120	19								
080/070						B							
080/075						B	B	B					
080/090						B	B	B	B				
080/110						BS	BS	BS	B	B	B		
080/130						BS	BS	BS	BS	B	B	B	B
090/070	90 B14 90 B5	95 130	115 165	140 200	24	B							
090/075						B	B	B					
090/090						B	B	B	B				
090/110						BS	BS	BS	B	B	B		
090/130						BS	BS	BS	BS	B	B	B	B

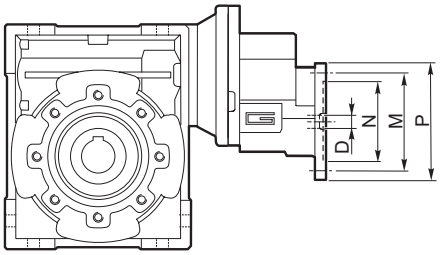

N.B.

Le aree evidenziate in grigio indicano l'applicabilità della corrispondente grandezza motore.

N.B. Grey areas indicate motor inputs available on each size of unit.

B/BS = Boccola di riduzione in acciaio

B/BS = Metal shaft sleeve

Dimensioni — *Dimensions*

CM 026 U

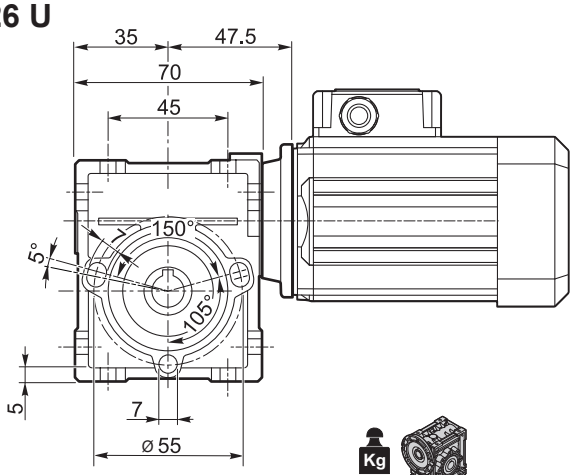

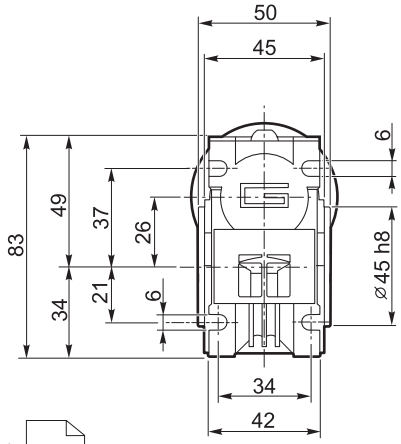

Kg 0.8

SMT SMM 50 ... 56 → N4 pag.

TS T2A T3A 56 → T4 pag.

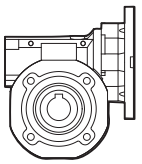

CL026 → H16 pag.

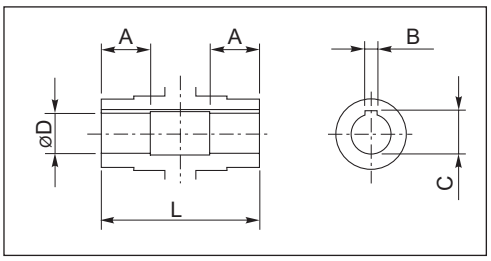

Albero lento cavo / *Hollow output shaft*

Grandezza *Size*	ø D H8	L	A	B	C
CM 026 (D14)	14	50	15	5	16.2
CM 026	12	50	15	4	13.8
CM 026 (D11)	11	50	15	4	12.8

CMIS 026 ..

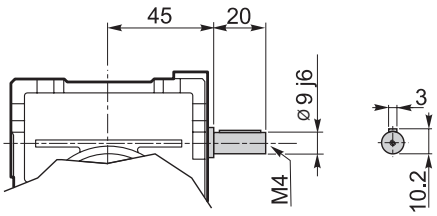

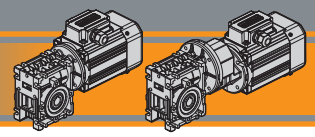

Dimensioni — *Dimensions*

CM 026 F

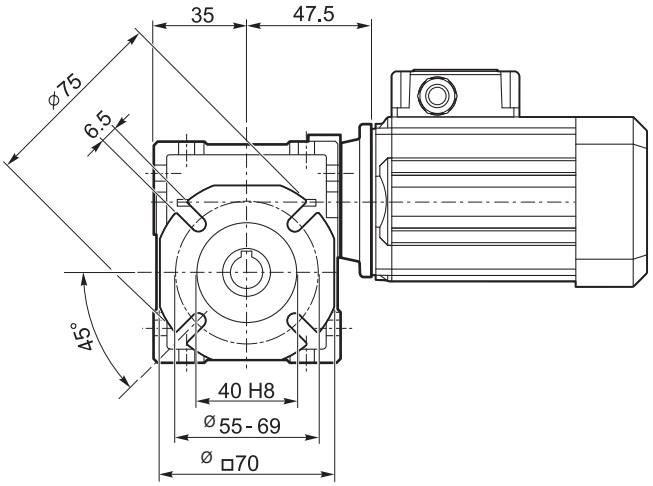

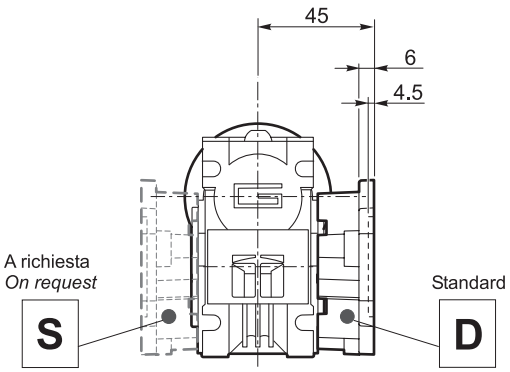

CM 026 F28

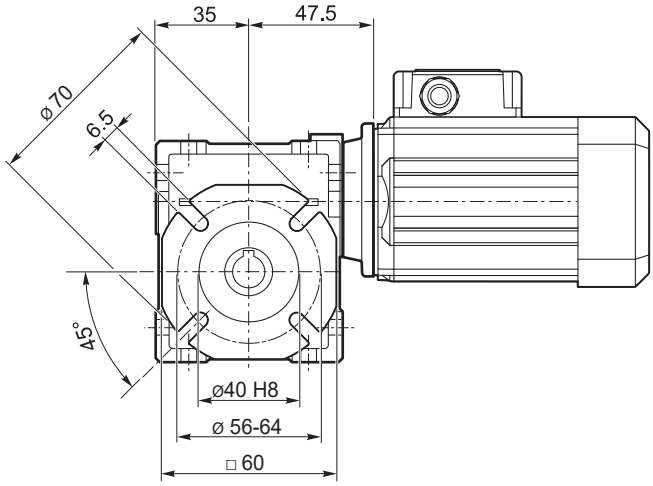

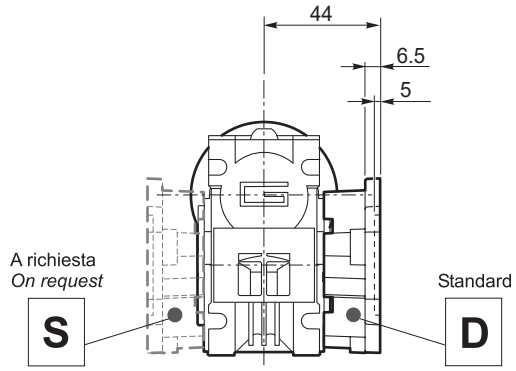

CM 026 F30

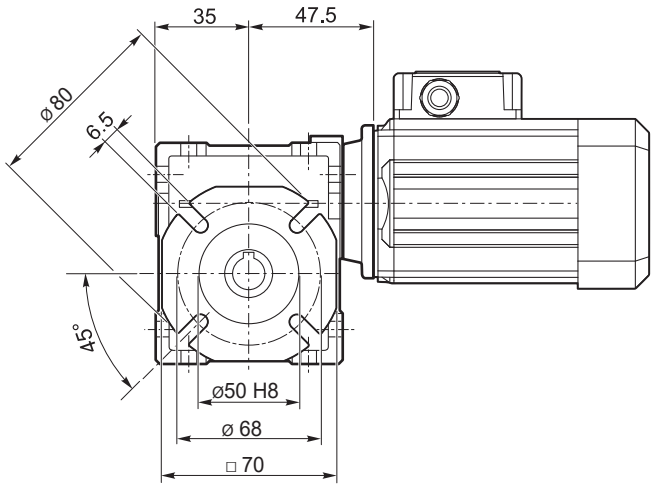

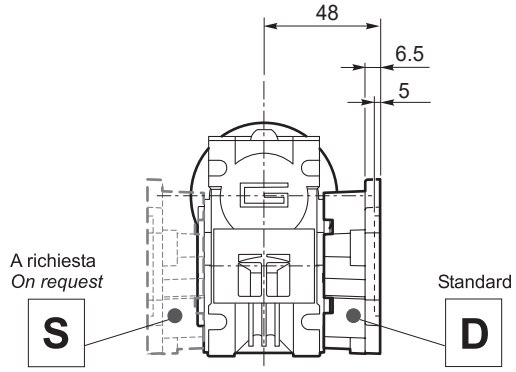

SMT SMM 50 ... 56 → N4 pag.

TS T2A T3A 56 → T4 pag.

CL026F
CL026 F28
CL026 F30 → H17 pag.

Dimensioni — *Dimensions*

CM 030 U

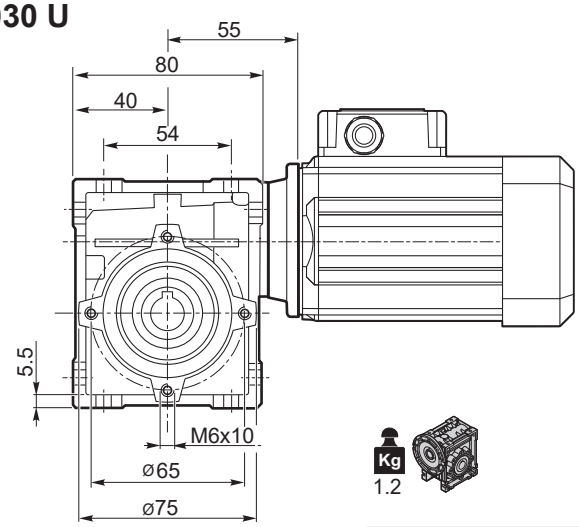

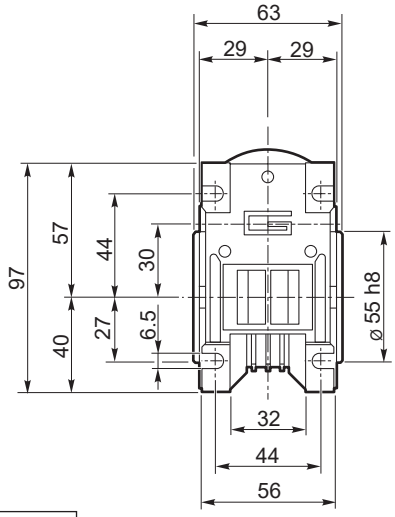

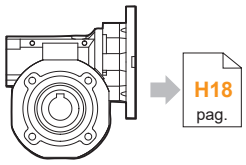

CL030

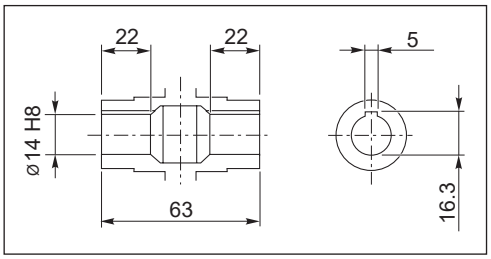

Albero lento cavo / *Hollow output shaft*

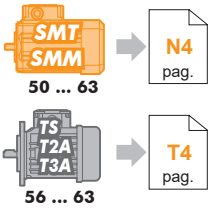

CMIS 030 ..

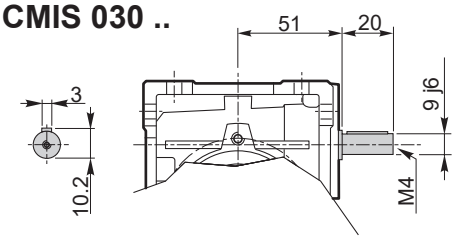

CMP ..

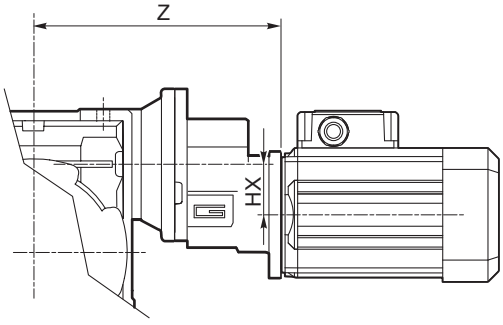

	HX	Z	Kg
056/030	30.5	124	2.1

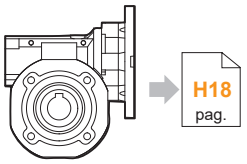

CLP 056/030

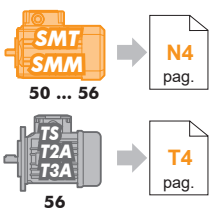

Dimensioni

Dimensions

CM 030 F

CMP../030 F

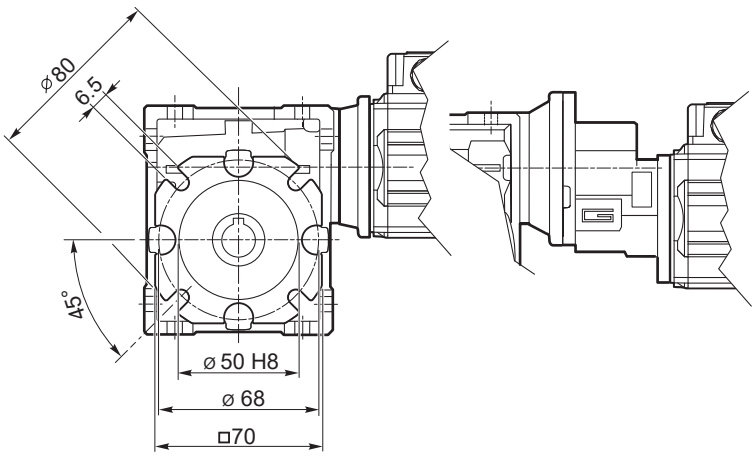

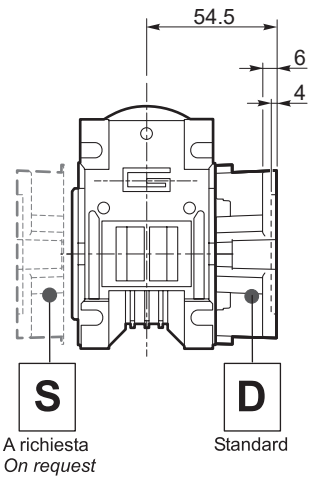

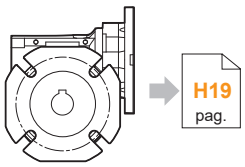

CL030 F

H19 pag.



50 ... 63

N4 pag.

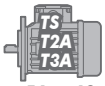

56 ... 63

T4 pag.

CM/CMP

Dimensioni ***Dimensions***

CM 040 U

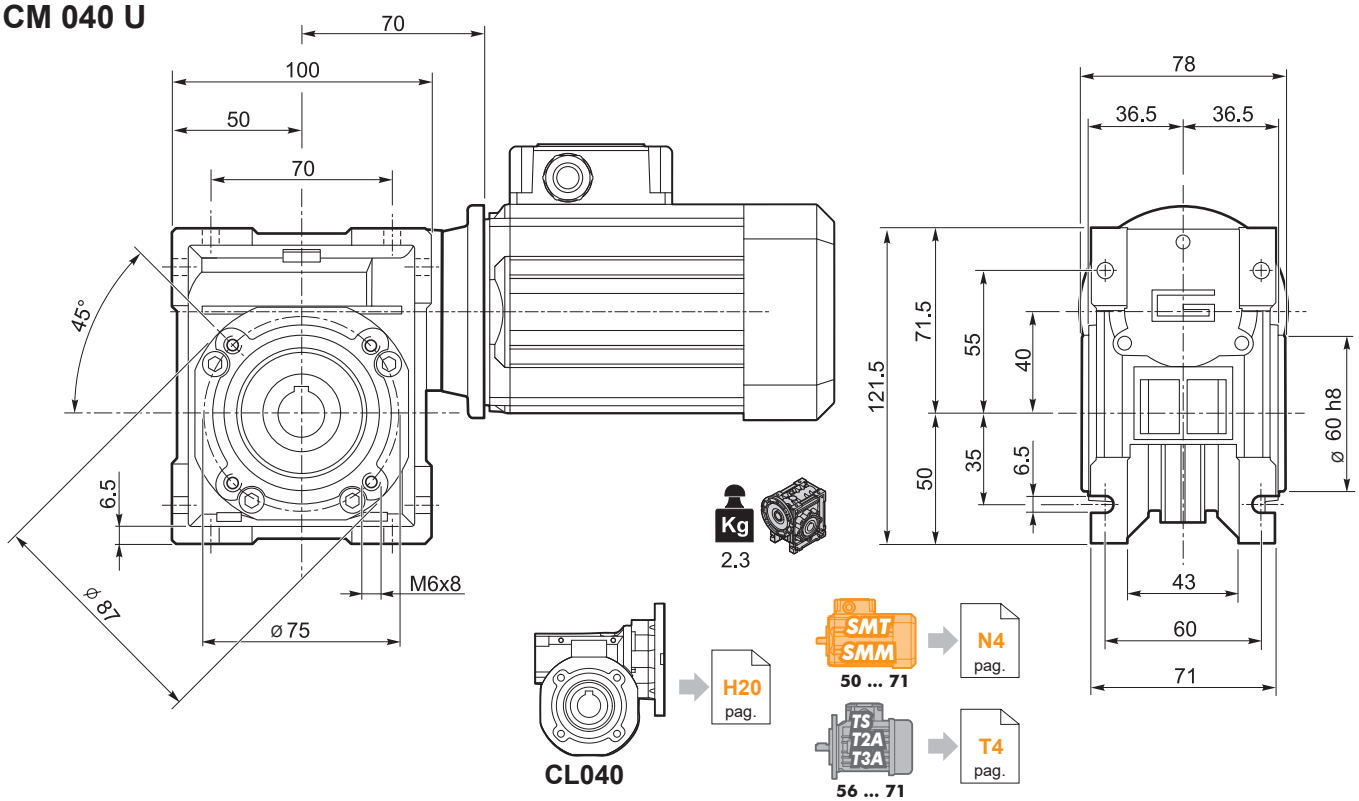

CMIS 040 ..

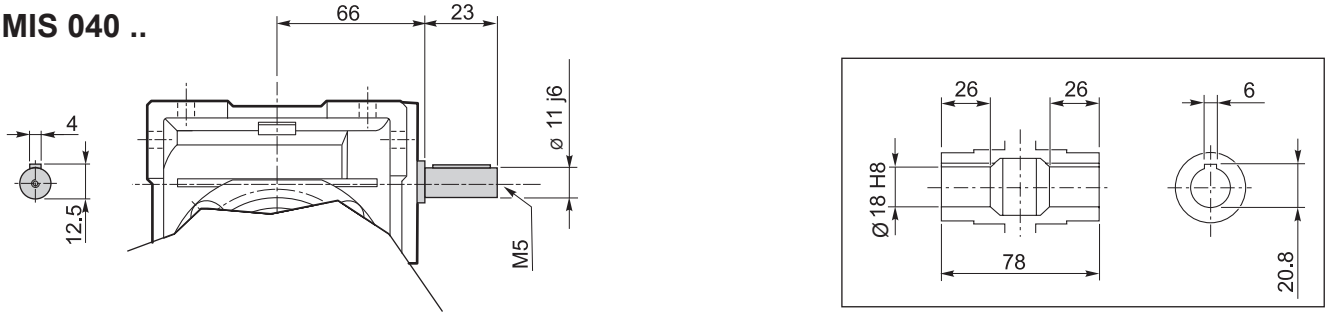

Albero lento cavo / *Hollow output shaft*

CMP ..

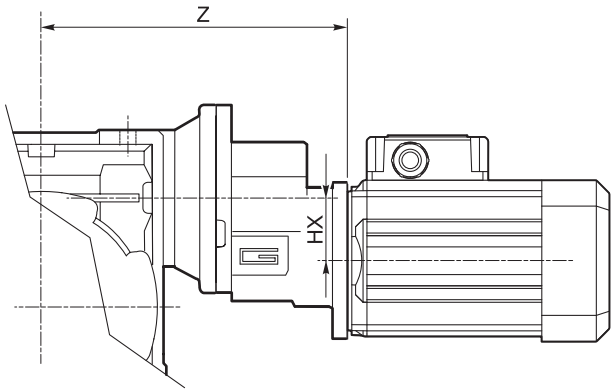

	HX	Z	Kg
056/040	30.5	139	3.2
063/040	30.5	142	3.3

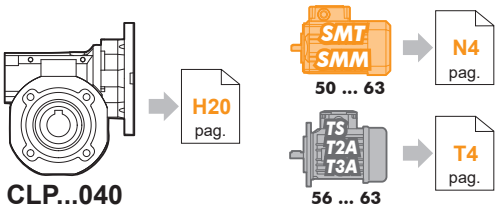

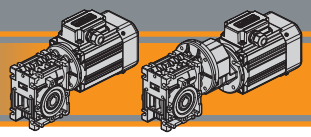

Dimensioni — *Dimensions*

CM 040 F

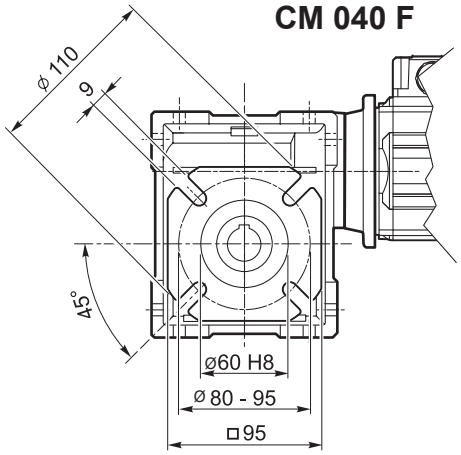

CMP../040 F

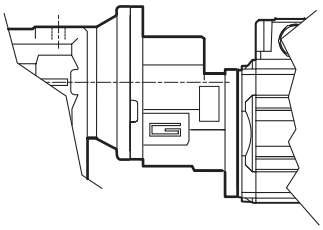

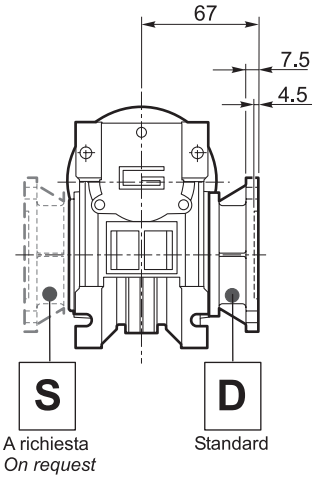

CM 040 FB

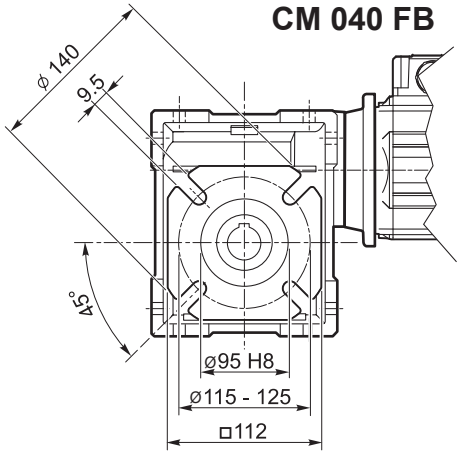

CMP../040 FB

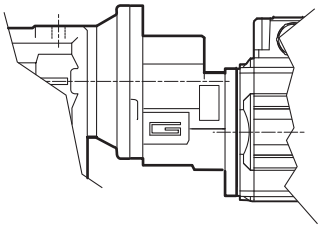

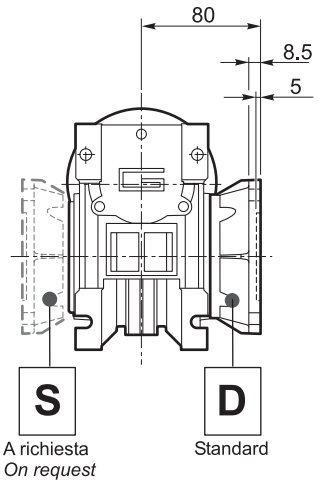

CM 040 FL

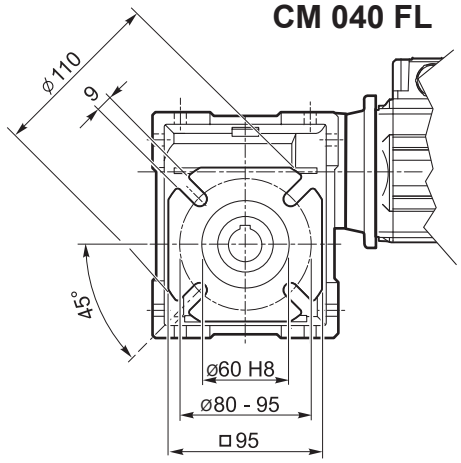

CMP../040 FL

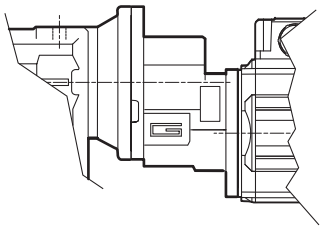

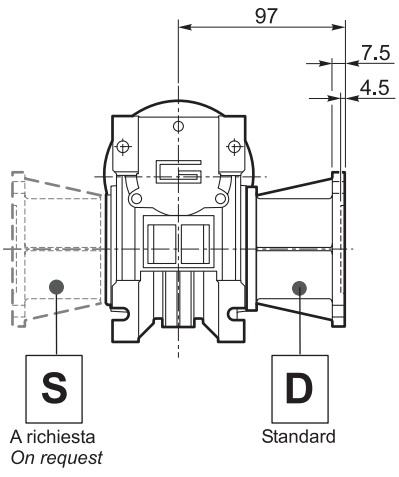

SMT SMM 50 ... 71 → N4 pag.
TS T2A T3A 56 ... 71 → T4 pag.
CL040 F
CL040 FB
CL040 FL → H21 pag.

Dimensioni — *Dimensions*

CM 050 U

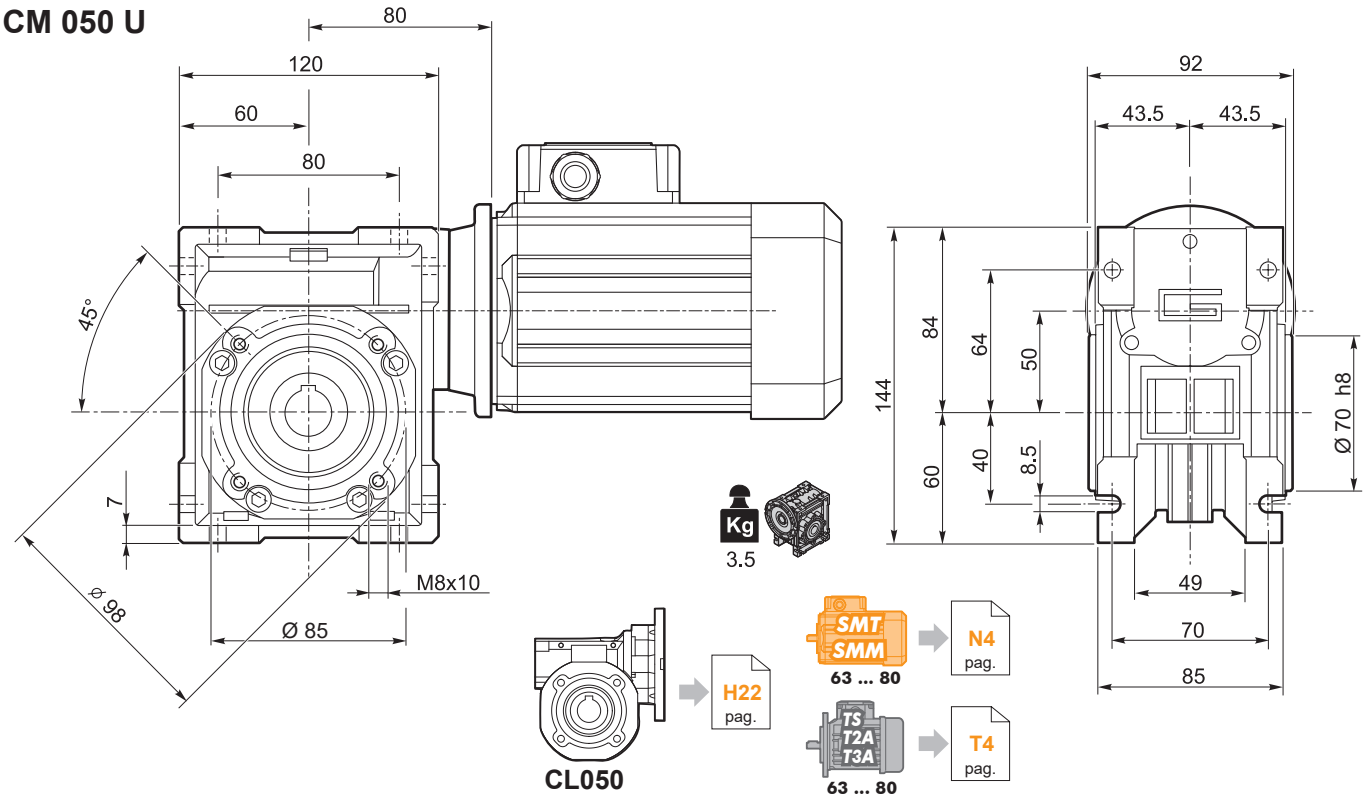

CMIS 050 ..

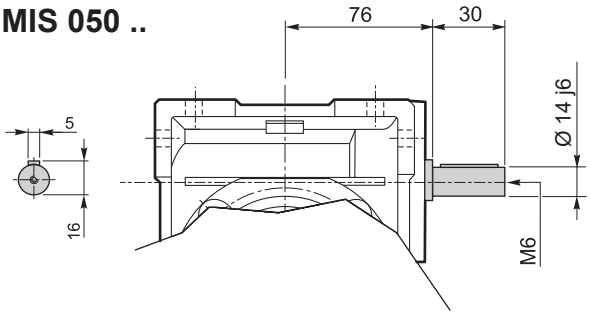

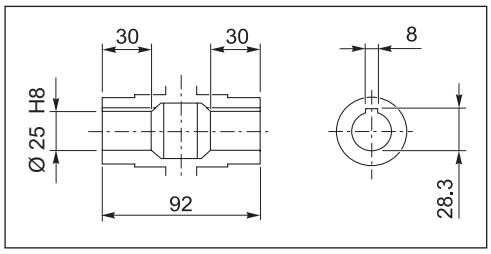

Albero lento cavo / *Hollow output shaft*

CMP ..

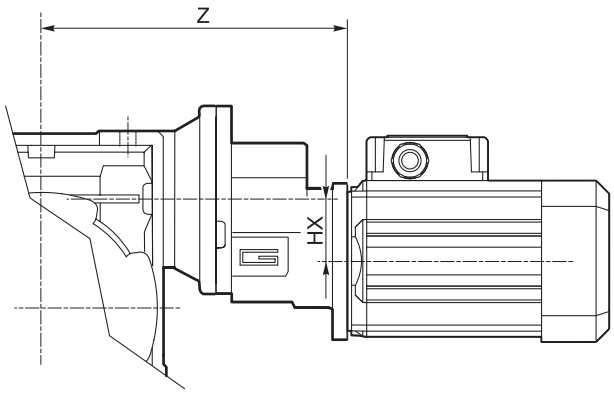

	HX	Z	Kg
063/050	30.5	152	4.5
071/050	41	169	5.5

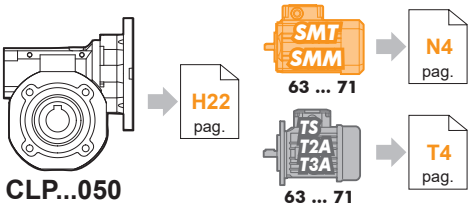

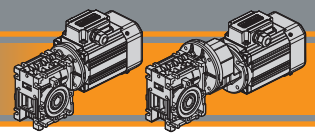

Dimensioni — *Dimensions*

CM 050 F

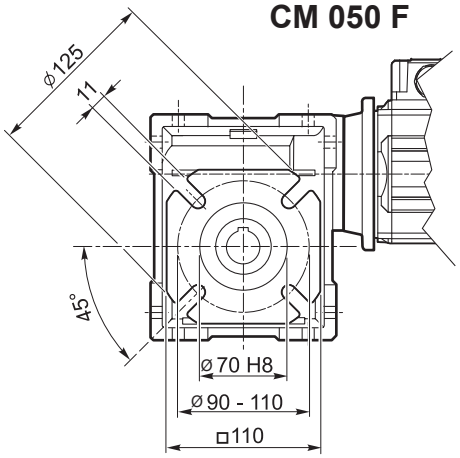

CMP../050 F

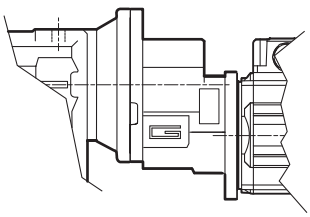

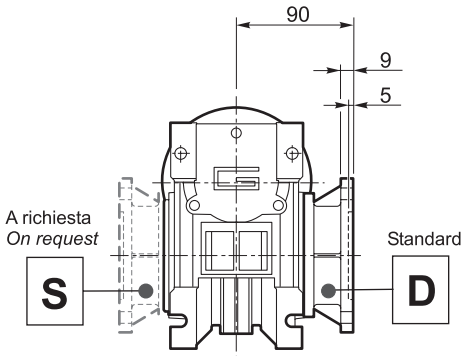

CM 050 FB

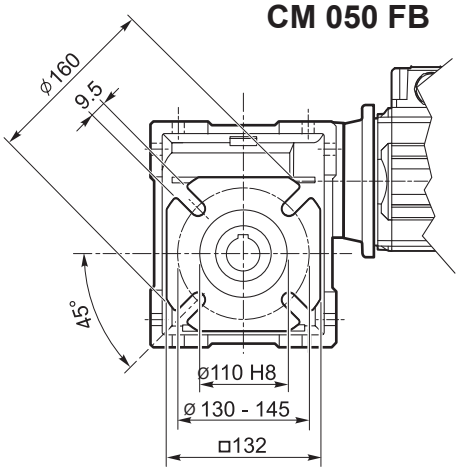

CMP../050 FB

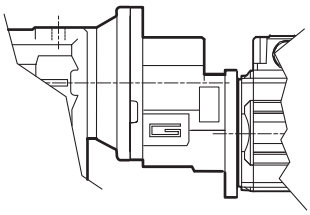

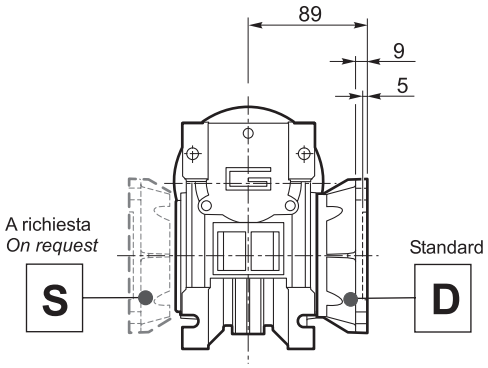

CM 050 FL

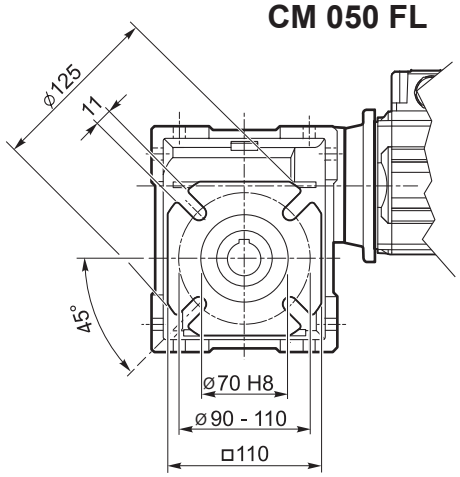

CMP../050 FL

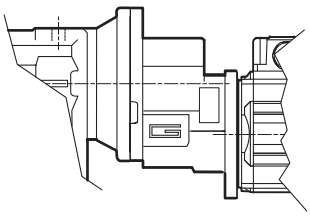

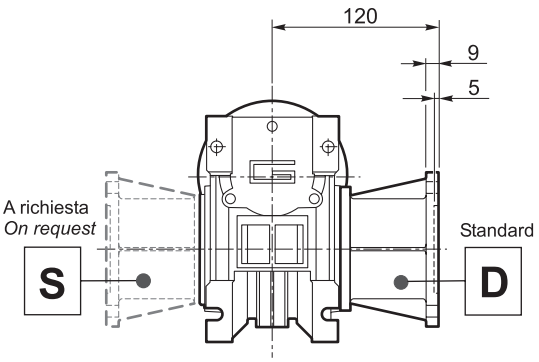

SMT SMM 63 ... 80 → N4 pag.

TS T2A T3A 63 ... 80 → T4 pag.

CL050 F
CL050 FB
CL050 FL → H23 pag.

Dimensioni — *Dimensions*

CM 063 U

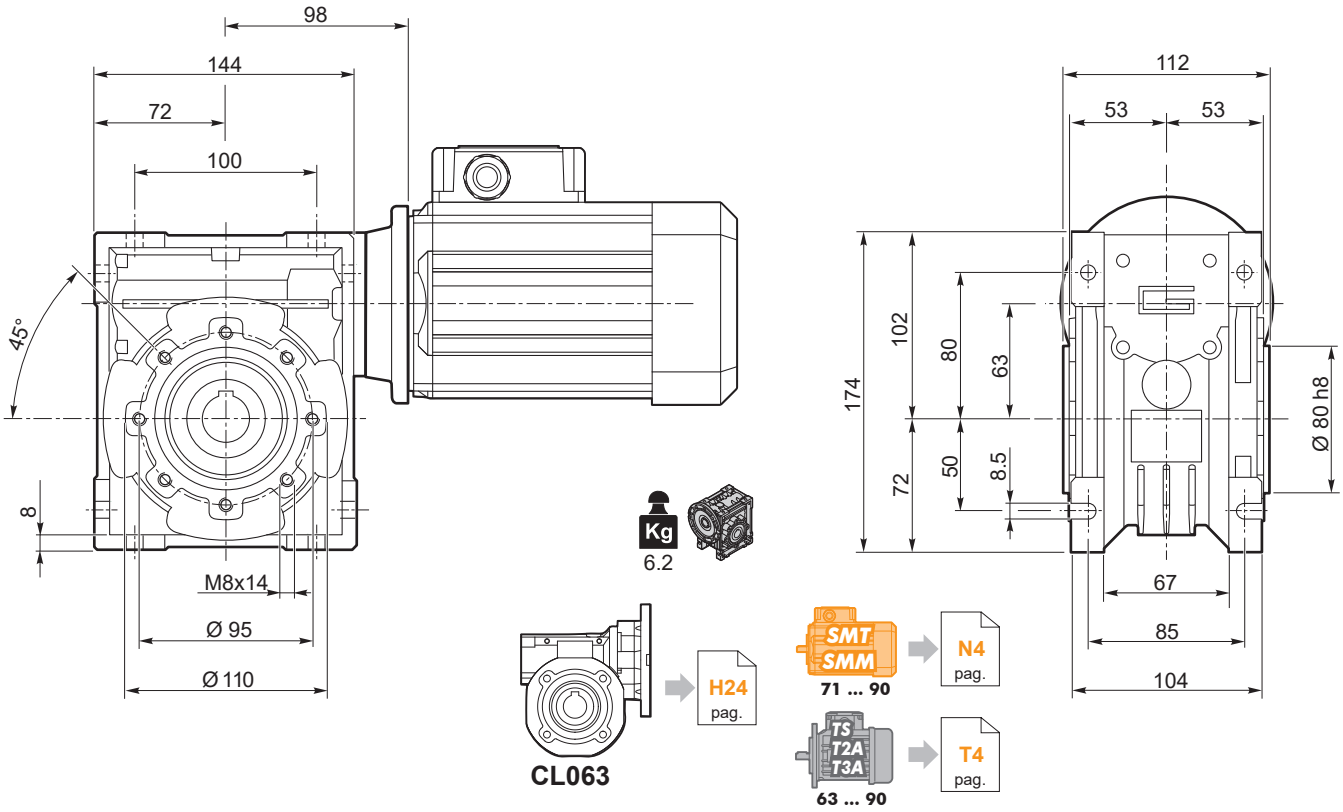

CMIS 063 ..

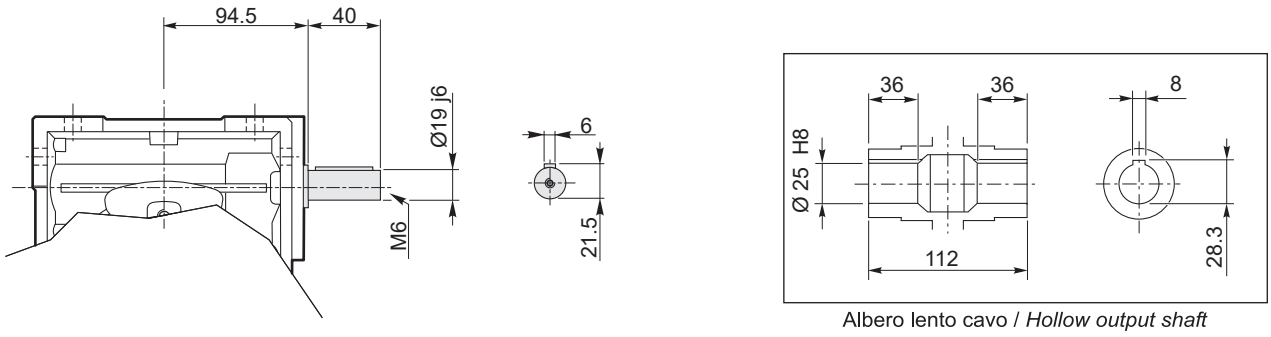

Albero lento cavo / *Hollow output shaft*

CMP ..

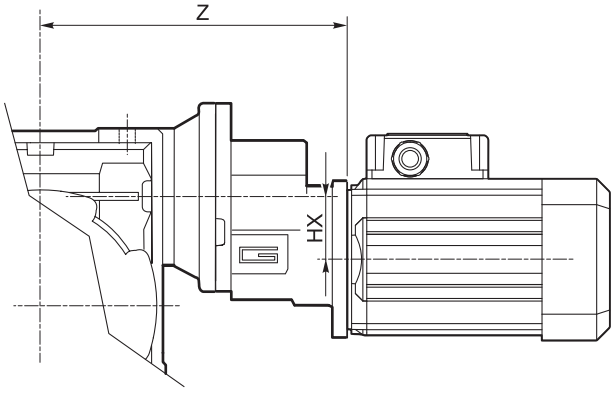

	HX	Z	Kg
063/063	30.5	170	7.2
071/063	41	187	8.2
080/063	41	198	9.0

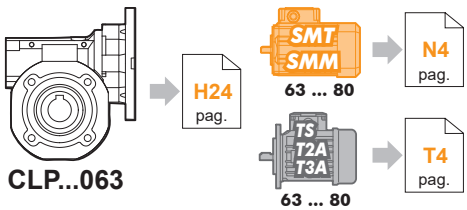

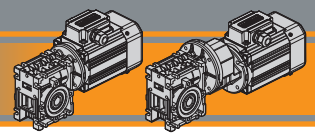

Dimensioni — *Dimensions*

CM 063 F

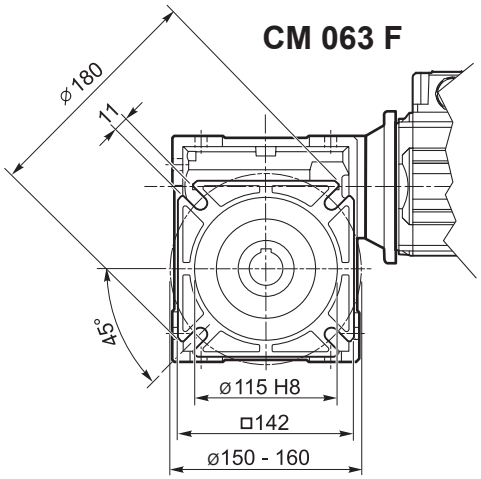

CMP../063 F

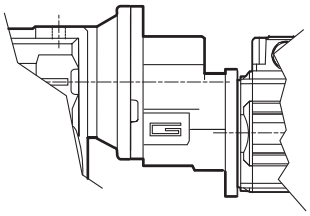

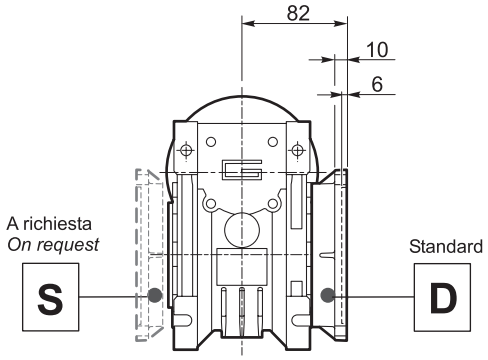

CM 063 FB

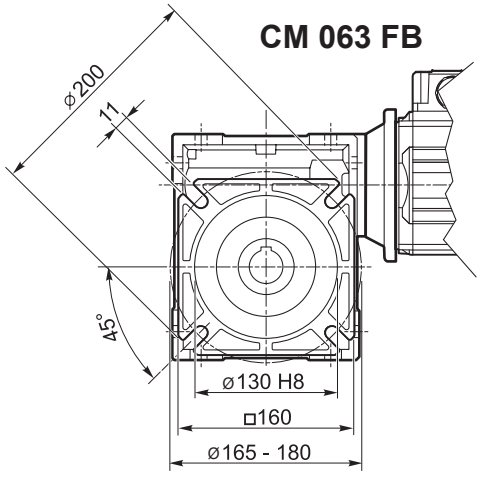

CMP../063 FB

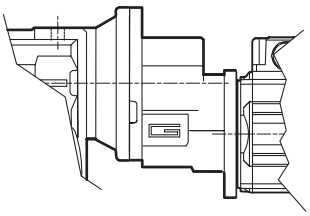

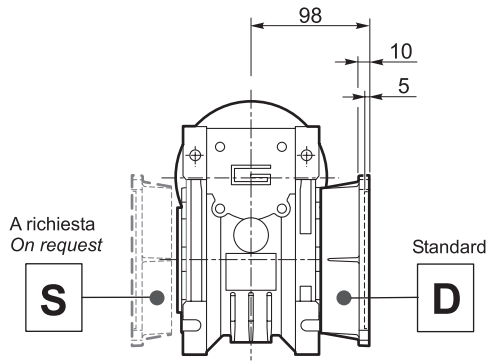

CM 063 FL

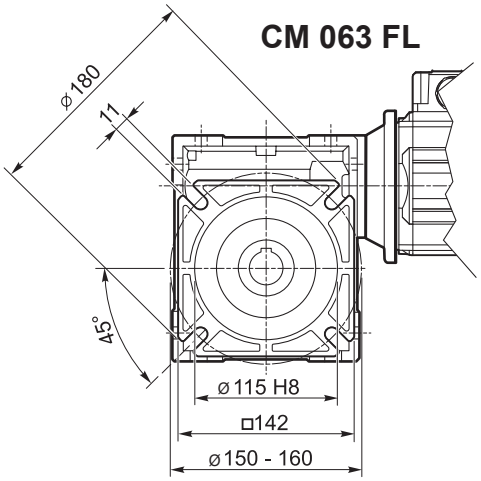

CMP../063 FL

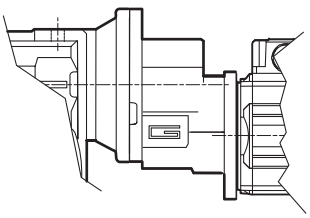

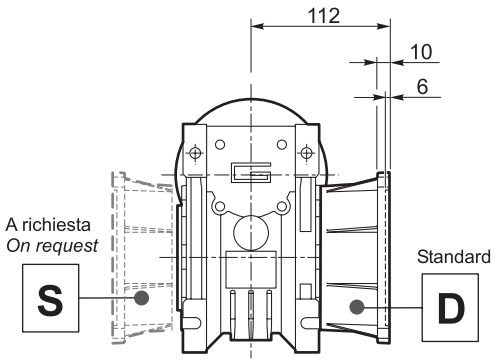

SMT SMM 63 ... 90 → N4 pag.

TS T2A T3A 63 ... 90 → T4 pag.

CL063 F
CL063 FB
CL063 FL → H25 pag.

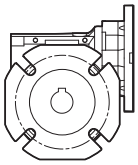

Dimensioni *Dimensions*

CM 070 U

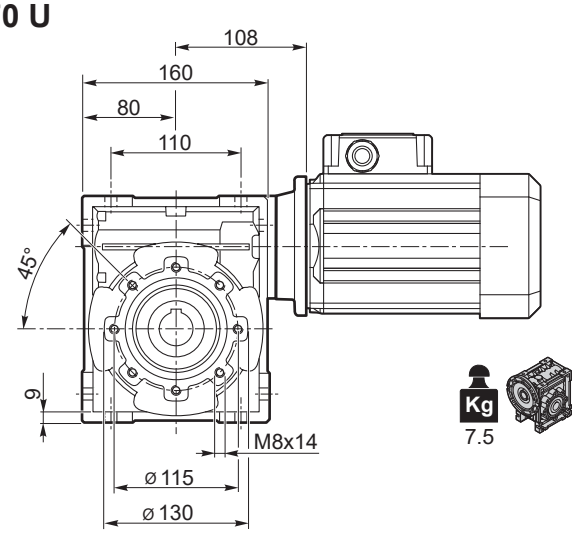

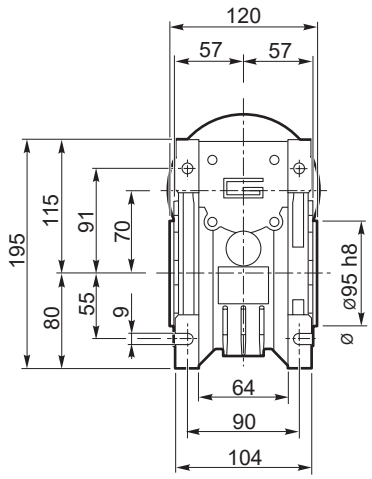

CM 070 F

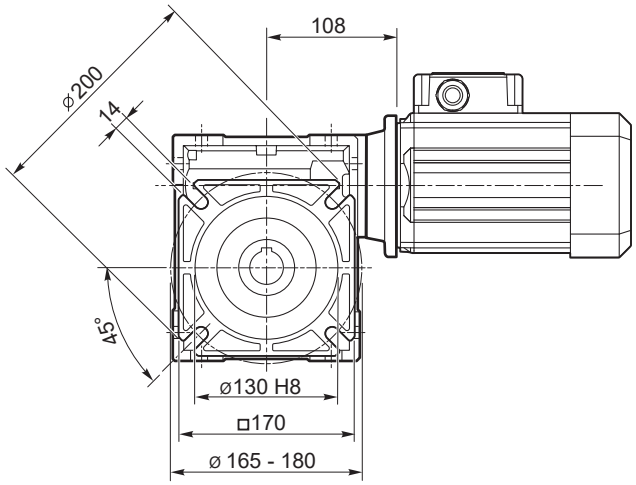

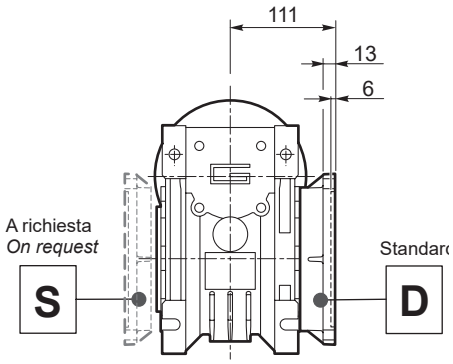

CMIS 070 ..

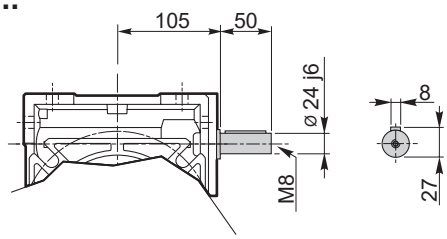

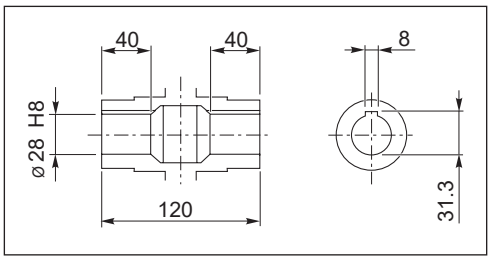

Albero lento cavo / *Hollow output shaft*

CMP ..

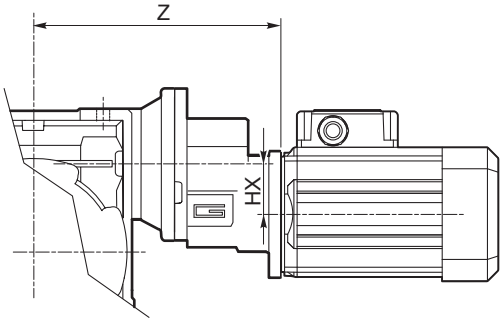

	HX	Z	Kg
071/070	41	197	9
080/070	41	208	9.8
090/070	36.5	262	10.5

SMT SMM 71 ... 90 → N4 pag.
TS T2A T3A 71 ... 100 → T4 pag.
CL070 CL070 F → H26 pag.

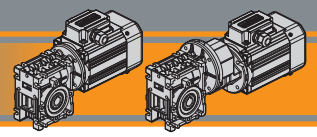

Dimensioni — *Dimensions*

CM 075 U

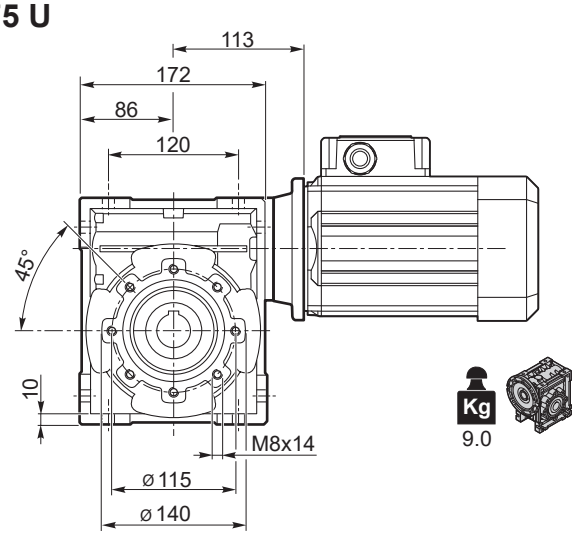

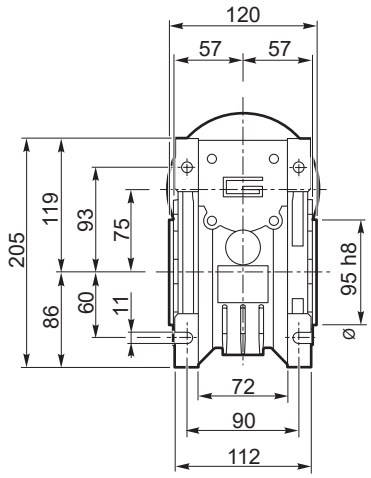

CM 075 F

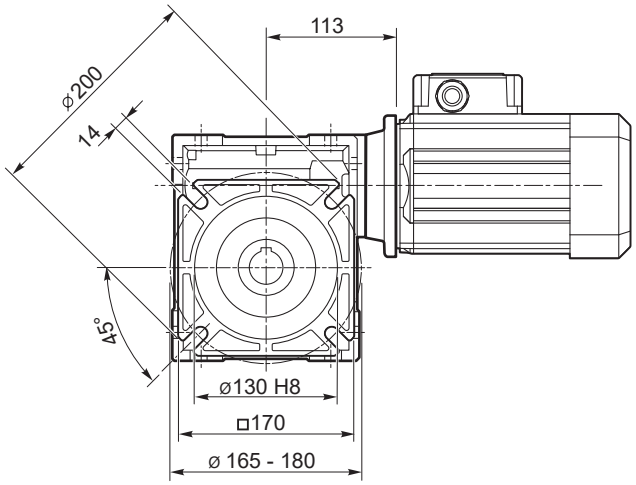

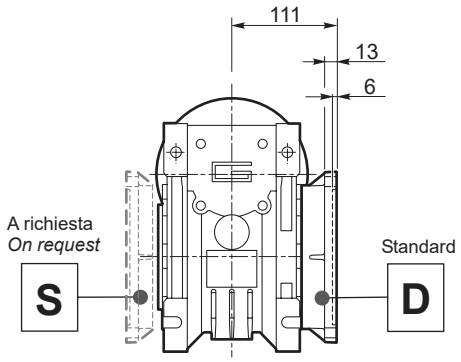

CMIS 075 ..

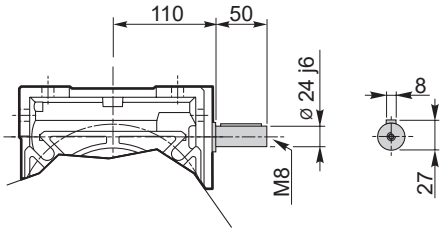

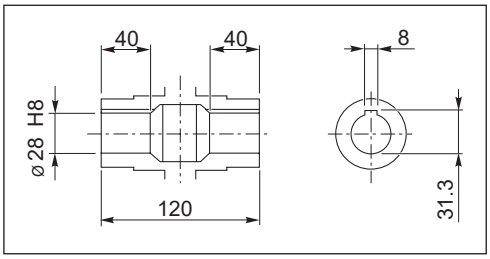

Albero lento cavo / *Hollow output shaft*

CMP ..

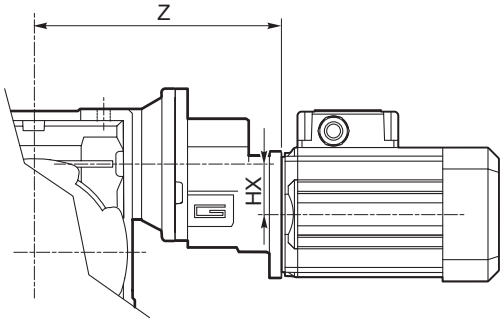

	HX	Z	Kg
071/075	41	202	11.0
080/075	41	213	11.8
090/075	36.5	267	12.5

SMT SMM 71 ... 90 → N4 pag.
TS T2A T3A 71 ... 100 → T4 pag.

Dimensioni — *Dimensions*

CM 090 U

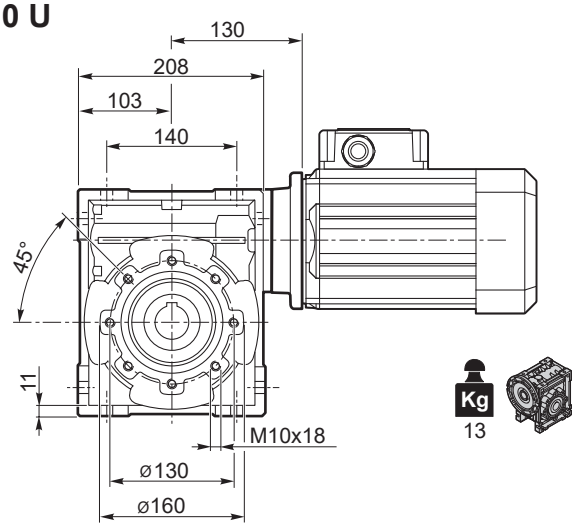

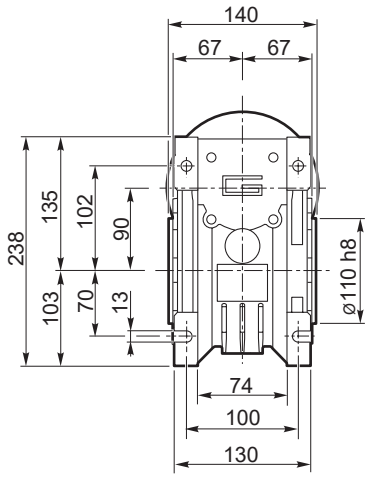

CM 090 F

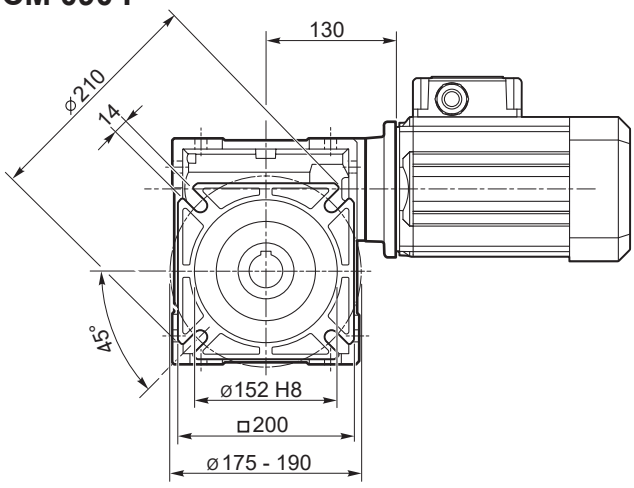

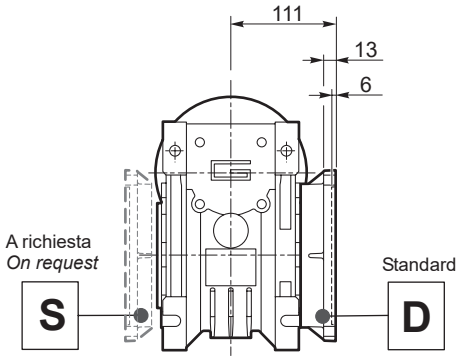

CMIS 090 ..

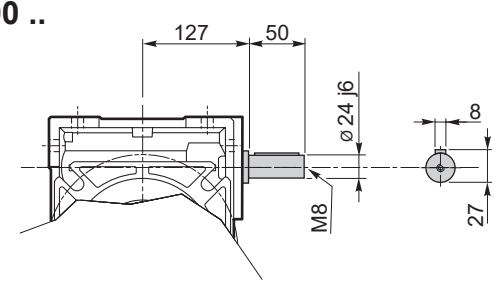

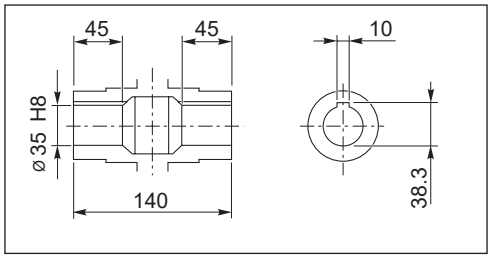

Albero lento cavo / *Hollow output shaft*

CMP ..

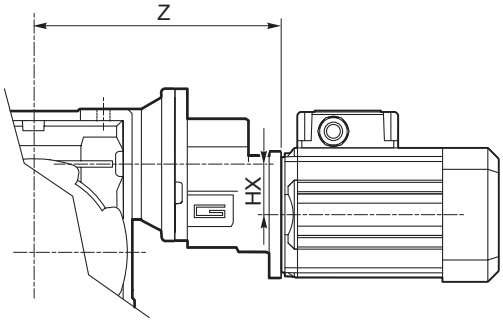

	HX	Z	Kg
071/090	41	219	15.0
080/090	41	230	15.8
090/090	36.5	284	16.5

SMT SMM 71 ... 90 → N4 pag.
TS T2A T3A 71 ... 100 → T4 pag.

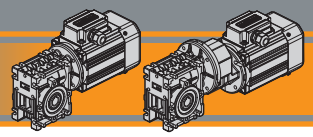

Dimensioni — *Dimensions*

CM 110 U

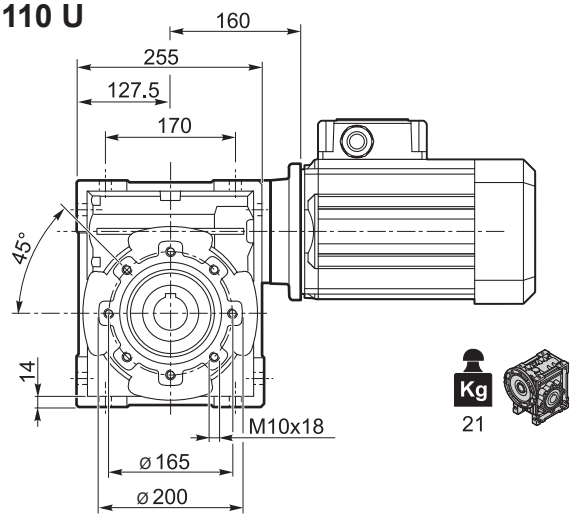

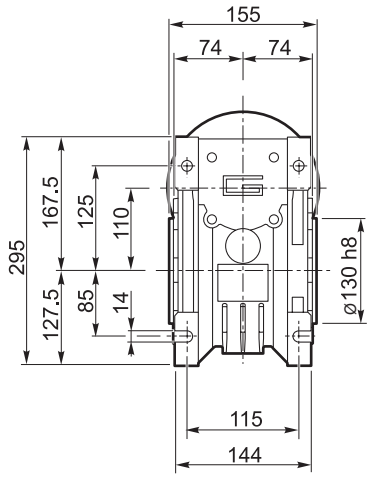

CM 110 F

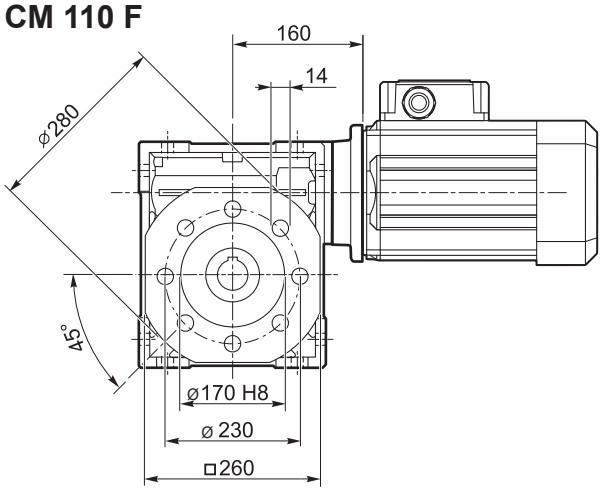

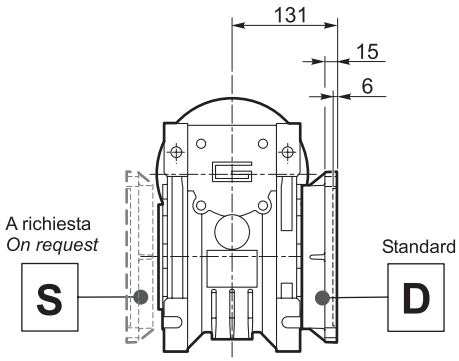

CMIS 110 ..

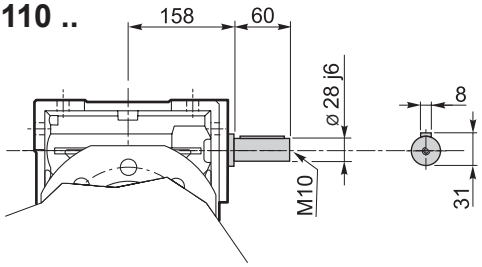

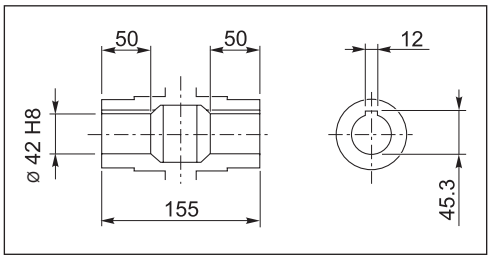

Albero lento cavo / *Hollow output shaft*

CMP ..

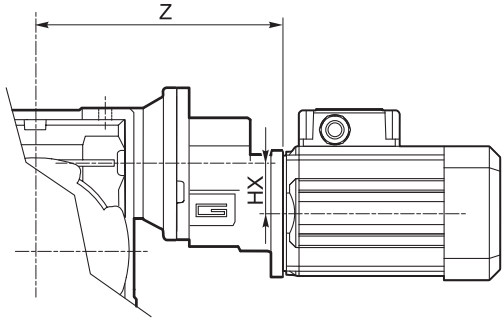

	HX	Z	Kg
080/110	41	260	23.8
090/110	36.5	314	24.5

SMT SMM 80 ... 90 → N4 pag.

TS T2A T3A 80 ... 100 → T4 pag.

Dimensioni — *Dimensions*

CM 130 U

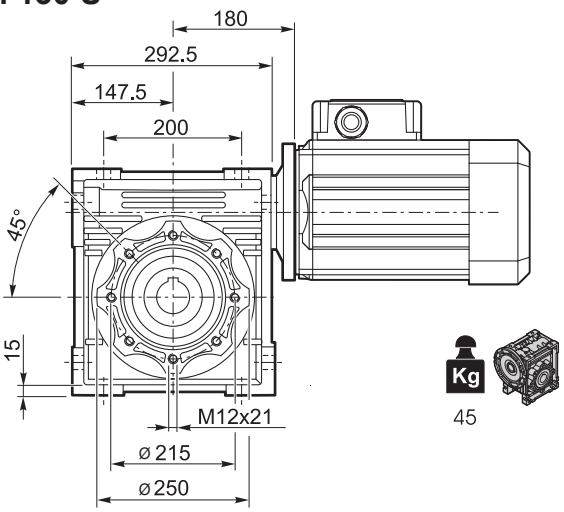

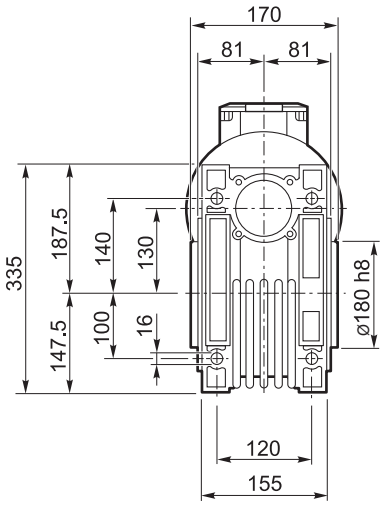

CM 130 F

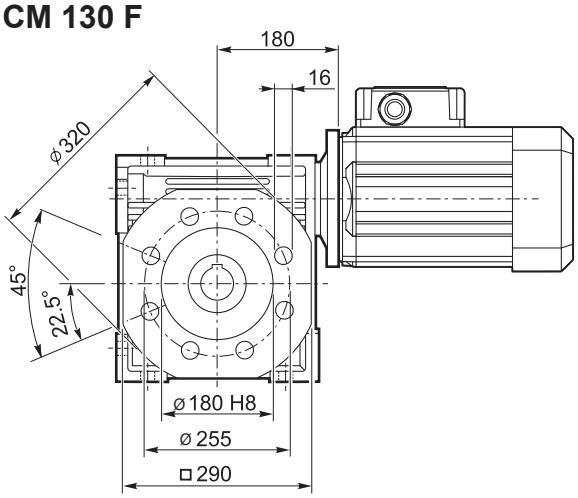

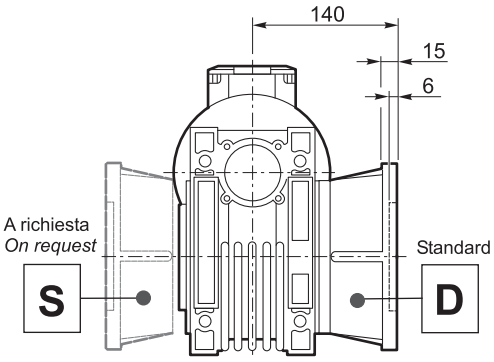

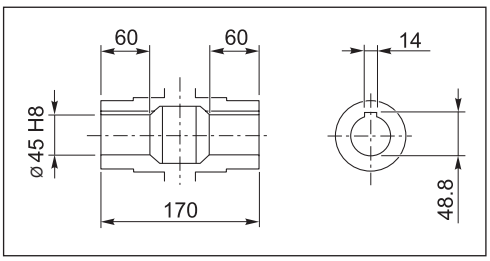

Albero lento cavo / *Hollow output shaft*

CMP ..

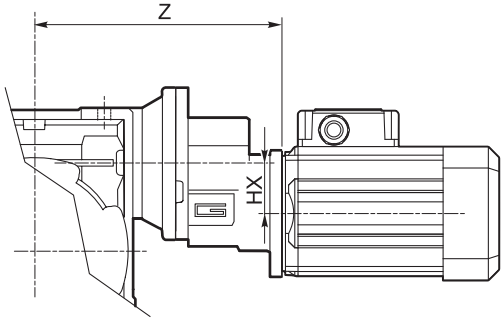

	HX	Z	Kg
080/130	41	280	47.8
090/130	36.5	334	48.5

SMT SMM 80 ... 90 → N4 pag.
TS T2A T3A 80 ... 100 → T4 pag.

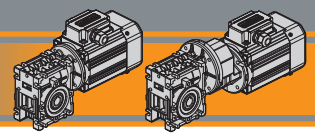

Accessori / *Accessories*

Albero lento semplice e doppio / *Single and double output shaft*

DZ

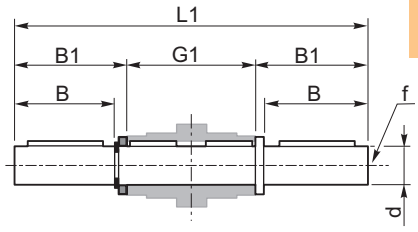

CM 030 - 130
CMP ../030 - ../130

SZ

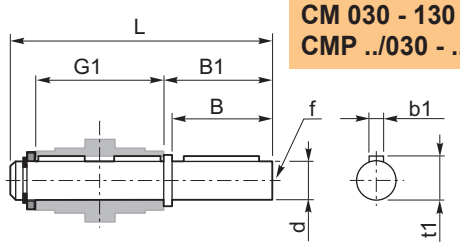

CM 030 - 130
CMP ../030 - ../130

CM	CMP	d h7	B	B1	G1	L	L1	f	b1	t1
030	056/030	14	30	32.5	63	102	128	M6	5	16
040	056/040 063/040	18	40	43	78	128	164	M6	6	20.5
050	063/050 071/050	25	50	53.5	92	153	199	M10	8	28
063	063/063 071/063 080/063	25	50	53.5	112	173	219	M10	8	28
070	071/070 080/070 090/070	28	60	63.5	120	192	247	M10	8	31
075	071/075 080/075 090/075	28	60	63.5	120	192	247	M10	8	31
090	071/090 080/090 090/090	35	80	84.5	140	234	309	M12	10	38
110	080/110 090/110	42	80	84.5	155	249	324	M16	12	45
130	080/130 090/130	45	80	85	170	265	340	M16	14	48.5

CM 026 (*)

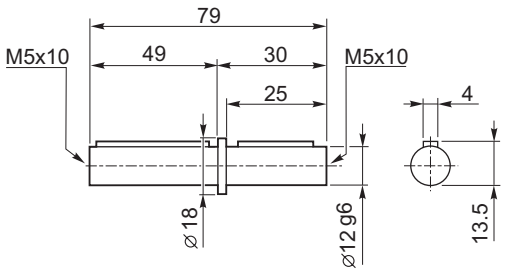

(*)
Nota: disponibile solo per cavo uscita Ø12
Note: *available for output hollow shaft Ø12 only*

Braccio di reazione / *Torque arm*

CM	CMP	K1	G	KG	KH	R
030	056/030	85	14	23	8	15
040	056/040 063/040	100	14	31	10	18
050	063/050 071/050	100	14	38	10	18
063	063/063 071/063 080/063	150	14	47.5	10	18
070	071/070 080/070 090/070	200	25	46.5	20	30
075	071/075 080/075 090/075	200	25	46.5	20	30
090	071/090 080/090 090/090	200	25	56.5	20	30
110	080/110 090/110	250	30	62	25	35
130	080/130 090/130	250	30	69	25	35

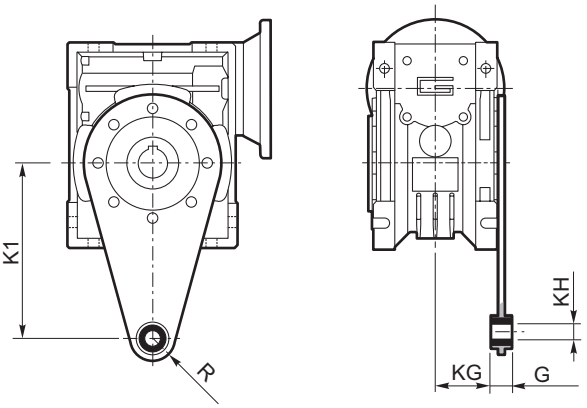

Accessori — *Accessories*

SC - *Safety Cover*

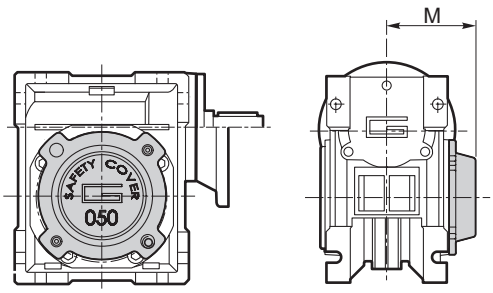

CM	CMP	M
030	056/030	47
040	056/040 063/040	54.5
050	063/050 071/050	62.5
063	063/063 071/063 080/063	73
070	071/070 080/070 090/070	75
075	071/075 080/075 090/075	79
090	071/090 080/090 090/090	94
110	080/110 090/110	102
130	080/130 090/130	117

WD - *Kit washdown cover*

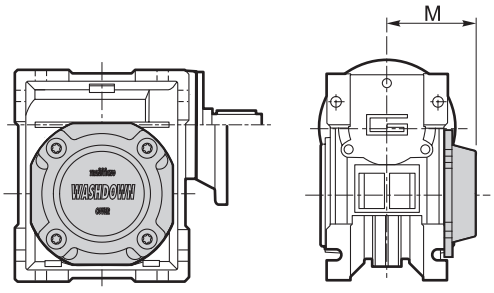

CM	CMP	M
026 (*)	-	37.5
030	056/030	48
040	056/040 063/040	55.5
050	063/050 071/050	63.5
063	063/063 071/063 080/063	71.5
070	071/070 080/070 090/070	76
075	071/075 080/075 090/075	80
090	071/090 080/090 090/090	95
110	080/110 090/110	103

(*)
Nota: Viti escluse dalla fornitura
Note: *Screws not included in the supply*

Opzioni — *Options*

VS - Vite sporgente / *Extended input shaft*

CM	CMP	A	B	D_1 j6	E	F	G
030	056/030	45	20	9	M4	3	10.2
040	056/040 063/040	53	23	11	M5	4	12.5
050	063/050 071/050	64	30	14	M6	5	16
063	063/063 071/063 080/063	75	40	19	M6	6	21.5
070	071/070 080/070 090/070	84	40	19	M6	6	21.5
075	071/075 080/075 090/075	90	50	24	M8	8	27
090	071/090 080/090 090/090	108	50	24	M8	8	27
110	080/110 090/110	135	60	28	M10	8	31
130	080/130 090/130	—	—	—	—	—	—

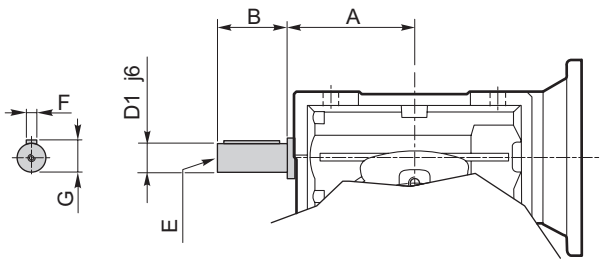

Costruito su richiesta
Built on request