Jenaer Antriebstechnik GmbH

EtherCAT®

PROFINET®

CANopen®

PROFIBUS®

Installation and Operating Instructions

ECOVARIO®114 D

Published editions:

Edition	Comment
April 2011	First English edition
Nov. 2011	Modifications: STO interface assignment, key operation, Node ID assignment
June 2012	Revised version: EtherCAT® interface and marking; connection of 2 encoders per axis
January 2013	Revised version: remarks of UL file review
April 2013	Modification: Option 9-pole encoder interfaces
Dec. 2013	New: Profinet interface. Revision of safety instructions, french translation added for UL reasons
May 2014	Modifications: Option encoder splitter DDK21, DDK22, accessories cables
July 2014	Modification: mains filter

Jenaer Antriebstechnik GmbH
Buchaer Straße 1
07745 Jena

The content of this document has been worked out and checked carefully. Nevertheless differences from the real state of the hard and software can never be fully excluded. Necessary corrections will be carried out in the next edition.

Inhalt

1 About

These original instructions describe the servo amplifier range ECOVARIO® 114 D. They concern to all persons who project, install and commission ECOVARIO® 114 D drives.

Further information:

- Software commissioning: „ECO Studio Operation Manual ECOVARIO®, ECOSTEP®, ECOMPACT®“
- Programming: manual „Object Dictionary ECOVARIO® and ECOSTEP®“, software tool ECO Studio
- Application Notes ECOVARIO® and ECOSTEP®
- Motor data: Product catalogue „ECOSTEP®/ECOVARIO®/ECOLIN® Drives“.

This manual makes the following demands on qualified personnel:
Transport: Personnel trained in handling electrostatic sensitive devices
Installation: Electrotechnically qualified personnel who know the security directives of electrical engineering and automation
Setup/Commissioning: Qualified personnel with a broad knowlege of the fields of electrical engineering, automation and drives.
Knowledge of machine safety legislation is compulsory.

2 Safety instructions / *Consignes de sécurité*

2.1 Signal words and symbols / *Mots d'avertissement et symboles*

Table 2.1: Signal words and possible symbols / Mots d'avertissement et symboles

	Description	*Description*
DANGER 	**Warning about a dangerous situation. Disregarding this warning will lead to death or serious, irreversible injuries.** Left symbol: General danger Right symbol: Dangerous electrical voltages	***Indique une situation dangereuse. Le non-respect de l'indication de danger mènera à la mort ou à des blessures graves ou irréversibles.*** *Pictogramme de gauche : indication générale de danger* *Pictogramme de droite : Danger du au courant électrique*
WARNING / *AVERTISSEMENT* 	**Warning about a dangerous situation. Disregarding this warning may lead to death or serious, irreversible injuries** Left symbol: General danger Right symbol: Dangerous electrical voltages	***Indique une situation dangereuse. Le non-respect de l'indication de danger peut mener à la mort ou à des blessures graves ou irréversibles.*** *Pictogramme de gauche : indication générale de danger* *Pictogramme de droite : Danger du au courant électrique*
CAUTION / *ATTENTION* 	**Warning about a dangerous situation. Disregarding this warning may lead to minor injuries** Left symbol: General Right symbol: Hot surfaces	***Indique une situation dangereuse. Le non-respect de l'indication de danger peut mener à des blessures légères.*** *Pictogramme de gauche : indication générale* *Pictogramme de droite : Attention aux surfaces chaudes*
NOTICE / *PRUDENCE*	**Disregarding this note may lead to damages of things.**	***Indique une situation qui, si elle n'est pas évitée, peut mener à la détérioration de matériel.***
INFO / *INDICATION* ☞	**Not a safety instruction. However: Important information on the use of the servo amplifier.**	***N'indique pas de situation de danger, mais une information importante par rapport à l'utilisation de l'amplificateur de servomoteur.***

2.2 General notes / *Indications générales*

CAUTION / *ATTENTION*	**Improper handling of the servo amplifier may lead lead to injuries and material damage.** Read this documentation carefully before you install and commission the device. The technical data and the information on connection requirements (nameplate and documentation) have to be adhered to. Only properly qualified personnel are permitted to perform activities such as transport, installation, setup and maintenance of the servo amplifier ECOVARIO®.	***L'utilisation non conforme des amplificateurs de servomoteurs peut entrainer des blessures et des dégâts matériels.*** *Veuillez lire la documentation avant d'installer et de mettre en route l'appareil. Les données techniques ainsi que les informations concernant le raccordement (Plaque constructeur et documentation) doivent absolument être respectées.* *Le transport, l'installation, la mise en service de l'amplificateur de servomoteurs ECOVARIO® ne doivent être réalisés que par du personnel autorisé et qualifié.*
CAUTION / *ATTENTION*	**The manufacturer of the machine must generate a hazard analysis for the machine and take appropriate measures to ensure that unforeseen movements cannot cause injury or damage to any person or property.** In case of modifications or retrofits with components of manufacturers other than Jenaer Antriebstechnik, please contact us to clarify that those components are suitable to be assembled with our devices.	***Le fabricant d'une machine ou d'une installation doit réaliser une analyse des risques et en tirer les conséquences qui assurent une utilisation en toute sécurité de l'ensemble de l'installation.*** *Lors de modification ou intégration de matériels d'autres fabricants, merci de nous contacter pour que nous puissions vérifier la compatibilité de ces éléments avec nos composants d'entrainement.*

2.3 Dangerous voltages / *Danger dus à des tensions dangereuses*

DANGER	**Never open the units during operation. There is danger of life or a risk of serious health and material damage.** Covers and cabinet doors have to be kept closed during operation. With the opening of the device all warranty and liability claims against Jenaer Antriebstechnik GmbH are void.	***Ne pas ouvrir l'appareil pendant l'utilisation. Il y a danger de mort ou danger de graves dommages à la santé et au matériel.*** *Les capots et portes d'armoires électriques doivent restés fermés pendant l'utilisation. L'ouverture de l'appareil entraine la perte de toute garantie et responsabilité de Jenaer Antriebstechnik GmbH.*
WARNING / *AVERTISSEMENT*	**The protective earth conductor has to be properly applied before applying a voltage.** If the protective earth conductor is not connected, in case of a failure e.g. the housing of the servo amplifier can be at hazardous voltage level.	***Un raccordement à la terre réglementaire doit obligatoirement être raccordé avant la mise sous tension de l'appareil.*** *Si cette mise à la terre n'est pas raccordée, le boitier de l'amplificateur de servomoteur peut, en cas de problèmes, mener de dangereuses tensions.*
WARNING / *AVERTISSEMENT*	**Never undo electrical connections while they are live! There is a risk of arcing. Arcs can cause injury and damage contacts.** During operation logic and power connectors are live.	***Ne pas effectuer de débranchements sous tension. Il y a danger d'arc électrique qui peut blesser des personnes et endommager des contacts.*** *Pendant l'utilisation les conducteurs de pilotage et de puissance conduisent des tensions dangereuses.*
WARNING / *AVERTISSEMENT*	**Directly after disconnecting the servo amplifier from the power supply never touch parts of the device which potentially could be live (e.g. contacts).** Wait at least six minutes. Capacitors can still have dangerous voltages present. To be sure measure the DC link circuit and wait till it has fallen below 40 V.	***Ne touchez pas de pièces de l'amplificateur de servomoteurs directement après l'avoir débranché de l'alimentation électrique qui peuvent être potentiellement conducteur de tension (par exemple des contacts).*** *Attendez au moins 6 minutes. Les condensateurs peuvent rester chargés aussi longtemps de tension dangereuse. Mesurez par sécurité les tensions entre circuits jusqu'à qu'elles soient inférieurs à 40V.*

2.4 Danger by hot surfaces / *Dangers dus à des surfaces chaudes*

CAUTION / *ATTENTION* 	**Hot surfaces may cause burns to the skin.** As the housing of the ECOVARIO serves also as heat sink during operation the surface temperature may rise to more than 70°C.	***Des surfaces chaudes peuvent entrainer des brulures.*** *Le boiter de l'ECOVARIO sert également de radiateur, ceci entraine qu'il peut atteindre des températures de plus de 70°C pendant l'utilisation.*

2.5 Danger by unintentional mechanical movements / *Dangers dus à des mouvements involontaires*

DANGER 	**Unintentional movements of motors, tools or axes may lead to death or serious injuries.** ECOVARIO® drives can produce strong mecanical powers and high accelerations. Avoid staying in the danger zone of the machine. Never switch off safety equipment! Emergency-off equipment must be workable in all operation modes, especially during setup and maintenance. Malfunctions should be repaired by qualified personnel immediately.	***Des mouvements involontaires de moteurs, d'axes ou d'outillages entrainent un danger de mort ou de blessures.*** *Les entrainements ECOVARIO® peuvent engendrer de très fortes accélérations mécaniques ainsi que des forces très élevées. Il faut éviter de se trouver dans la zone de danger de la machine. Des équipements de sécurité ne doivent jamais être mis hors service. Des équipements d'arrêt d'urgence doivent rester opérationnels dans tous les modes de fonctionnement, aussi pendant la mise en service ainsi qu'en mode maintenance. Des dérangements doivent être résorbés sans délai par du personnel qualifié.*

2.6 Prescribed use / *Utilisation conforme*

The servo amplifiers ECOVARIO® 114 D are components which are built into electrical equipment or machines and can only be used as integral components of such equipment. The leakage current of ECOVARIO® 114 D is higher than 3.5 mA. All notes about technical data and ambient conditions have to be observed.
Using the unit in hazardous locations and in ambients containing oil, gas, vapours, dusts, radiations etc. is prohibited if it is not explicitly allowed.
The manufacturer of the machine must generate a hazard analysis for the machine and take appropriate measures to ensure that unforeseen movements cannot cause injury or damage to any person or property.

L'amplificateur de servomoteurs ECOVARIO® 114 D est un composant de systèmes d'entrainement, il doit être installé en monte fixe dans une armoire électrique prévue à cet effet. Le courant de terre de l'ECOVARIO® 114 D est supérieur à 3,5 mA.
Toutes les indications de donnée techniques et conditions d'implantation doivent absolument être respectées.
L'utilisation de l'appareil est interdite dans des environnements aux risques explosifs, environnements huileux, acide, gazeux, vaporeux, poussiéreux, radiants, etc… s'il n'est pas expressément autorisé pour ces milieux.
Le fabricant de la machine ou de l'installation doit établir une analyse des risques et en tirer les conséquences qui garantissent une utilisation en toute sécurité.

WARNING / *AVERTISSEMENT*	**ECOVARIO 114 D must <u>not</u> be connected to the mains power supply!** The device must be driven by a power supply unit! Connecting the servo amplifier directly to the mains will result in destruction.	***ECOVARIO 114 D <u>ne doit pas</u> être connecté directement à l'alimentation 230 V!*** *Il doit être alimenté à partir d'un module d'alimentation électrique. Connexion directe mène à la destruction.*

If one or more servo amplifiers ECOVARIO® are built into machines or plants the intended operation of the servo amplifier is forbidden until it has been established that the machine or plant fulfills the requirements of the EC Machinery Directive 2006/42/EC and the EMC Directive 2004/108/EC. Further EN 60204 and EN ISO 12100 parts 1 and 2 have to be observed.

La mise en service d'une installation ou une machine où sont intégrés un ou plusieurs ECOVARIO® est interdite jusqu'à ce qu'il ait été établi que toutes les dispositions des directives européennes et des règles de sécurité de protection contre les accidents spécifiques au pays d'implantation soient remplies. En particuliers, il s'agit en premier ordre de la Directive Machines 2006/42/CE et de la Directive CEM 2004/108/CE. Puis DIN EN 60204 et DIN EN ISO 12100, parties 1 et 2.

Safety function „Safe Torque Off", STO (cf. chapter 6.4.1) / *Fonction de sécurité „Safe Torque Off", STO, chapitre 6.4.1*

The safety function STO must be integrated into a safety circuit that meets the demands of the safety standards of EN 60204, EN ISO 12100-1 and -2 and EN ISO 13849-1. It must only be activated when the motor is not longer rotating. Drives with a suspended load must have an additional safe mechanical blocking.

La fonction de sécurité STO doit être intégrée dans un circuit de sécurité, les exigences des directives DIN EN 60204, DIN EN ISO 12100-1 et -2 et EN ISO 13849-1 sont suffisantes.
Elle ne doit être activée que si le moteur est arrêté et isolé de toute force s'exerçant sur lui (par exemple des charges suspendues) qui doivent être bloquées avec un dispositif mécanique complémentaire.

2.7 Foreseeable misuse of the safety function STO / *Mauvaises utilisation prévisibles de la fonction de sécurité STO*

The restart lock must not be used if the drive is to be made inactive for the following reasons:

- cleaning, maintenance and repair operations
- long inoperative periods

In such cases the entire system should be disconnected from the supply by the personnel, and secured (main switch).

- in emergency-stop situations

In emergency-stop situations the main contactor is switched off (by the emergency-stop button or the BTB-contact in the safety circuit).

La fonction de sécurité STO ***ne doit pas être utilisée***

- *pendant la mise à l'arrêt pour travaux de nettoyage, de maintenance, de réparation ainsi que pour de longues interruptions d'utilisation : Dans ces cas, l'installation doit être mise hors tension par le sectionneur principal*
- *dans une situation d'arrêt d'urgence : dans ce cas, un relais d'arrêt d'urgence doit mettre l'installation hors tension.*

3 Legal notes

3.1 Terms of delivery

Our terms of delivery are based on the „The General Terms of Delivery for Products and Services of the Electrical Industry“ (German: ALB ZVEI) of the Central Association of the Electrical and Electronics Industry (ZVEI e.V.) in their current version.

3.2 Liability

The circuits and procedures in this manual are proposals. Every user has to check the suitability for every special case. Jenaer Antriebstechnik GmbH is not responsible for suitability. Especially Jenaer Antriebstechnik is not responsible for the following damage causes:

- disregarding the instructions of this manual or other documents concerning ECOVARIO®
- unauthorized modifications of drive, motor or accessories
- operating or dimensioning faults
- Improper use of the ECOVARIO® 114 D components

3.3 Standards and directives

ECOVARIO® are components intended to be built into machines or plants for industrial purpose.
The units meet the following standards:
DIN EN 61800-5-1: Adjustable speed electrical power drive systems – Part 5-1: Safety requirements; Electrical, thermal and energy

DIN EN 61800-5-2: Adjustable speed electrical power drive systems - Part 5-2: Safety requirements; Functional safety

DIN EN 61800-3: Adjustable speed electrical power drive systems – Part 3: EMC requirements and specific test methods

DIN EN 60 204: Safety of machinery - electrical equipment of machines - Part 1: General requirements.

3.3.1 UL/CSA conformity / *Conformité UL/CSA d'après UL 508C*

If ECOVARIO® servo amplifiers are to be used in countries where UL (Underwriters Laboratories Inc.) or cUL conformity resp. is required the appropriate type has to be selected (cf. chapter 4.3 „Order key“).
For further information see UL file number E244038 at www.ul.com.
Si les amplificateurs de servomoteur ECOVARIO® sont installés dans des pays où l' UL ou une conformité cUL est requise, le type exact qui est requis doit être précisé lors de la commande on choisissant le type exacte (voir chapitre 4.3 clé du type). Vous trouverez des informations complémentaires sous le numéro de fichier UL - E244038 sur la page web www.ul.com.

The UL(cUL) certification (UL 840 and UL 508C in this case) is related exclusively to the mechanical and electrical design of the device. UL(cUL) certified servo amplifiers are in accordance with the respective american and canadian fire regulations.
La certification UL(cUL) (Dans ce cas UL 840 et UL 508C) se rapporte exclusivement aux caractéristiques de constructions mécaniques et électriques de l'appareil. Les directives UL(cUL) fixent entre autres les exigences techniques minimales pour appareils électriques pour prévenir les risques d'incendie qui émanent d'appareils électriques.

The installation and safety precautions in this documentaion have to be observed.
Les indications d'installation et de sécurité de ce document doivent être respectées.

3.3.2 CE conformity

ECOVARIO® servo amplifiers are components that are intended to be built into electrical plant and machines for industrial use. The manufacturer of the machine is responsible that the machine or plant fulfills the requirements of the EMC directive.
The servo amplifiers have been tested by an authorized testing laboratory in a defined configuration with the system components which are described in this documentation.
Any divergence from the configuration and installation described in this manual means that you will be responsible for carrying out new measurements to ensure that the regulatory requirements are fulfilled. For servo amplifiers with integrated safety function the conformity assessment is carried out according to the EC machine directive 2006/42/EC.

Jenaer Antriebstechnik GmbH

Jenaer Antriebstechnik GmbH • Buchaer Straße 1 • 07745 Jena
Tel.: +49 (0) 3641/63376-0 • Fax: +49 (0) 3641/63376-99 Internet: www.jat-gmbh.de • E-mail: info@jat-gmbh.de

EG – Konformitätserklärung
EC – Declaration of Conformity

Hiermit erklären wir / Herewith we

Jenaer Antriebstechnik GmbH, Buchaer Str. 1, 07745 Jena, Deutschland

in alleiniger Verantwortung, dass das gelieferte Modell / declare under our own responsibility that the supplied model of

Servoverstärker mit Sicherheitsfunktion ECOVARIO® 114 xR-xx-xxx-xxx
Servo amplifier with safety function

den Anforderungen der	complies with
EG-Maschinenrichtlinie 2006/42/EC entspricht.	**EC Machinery Directive 2006/42/EC**

Hierfür wurden die folgenden harmonisierten Normen angewendet / For this, the following harmonized standards were applied:

EN 60204-1:2006, EN ISO 13849-1:2008
EN 61800-5-2:2007, EN 61800-5-1 / VDE160
EN 61800-3:2004

Das Produkt ist nach Artikel 2, Buchstabe c der Richtlinie 2006/42/EG als Sicherheitsbauteil definiert. Es ist ausschließlich für den Einbau in eine Maschine bestimmt. Die Inbetriebnahme ist so lange untersagt, bis die Gesamtmaschine, in die das Produkt eingebaut werden soll, den Bestimmungen der Richtlinie 2006/42/EG entspricht.	The products are defined as safety components according to directive 2006/42/EC. They are exclusively intended for installation in machines. Operation is prohibited until it has been determined that the machines in which these products are to be installed, conform to the directive 2006/42/EC.
Die Sicherheitshinweise der Betriebsanleitung sind zu beachten.	The safety instructions of the manual are to be considered.

Ort, Datum der Ausstellung (Place and date of issue)	Geschäftsführer (General Manager)	Dokumentationsverantwortlicher (Responsible for documentation)
Jena, 17.01.2013		
	Dipl.-Ing. (FH) Stephan Preuß	Dipl.-Ing. Gerald Bobe

4 Technical Data

4.1 Rated data of the power stage

Table 4.2: Rated data of the power supply, DC supply

Symb.	Rated data MAC2 – 2-phase AC servo motor MAC3 – 3-phase AC servo motor	Unit	ECOVARIO® 114 D x-x x-xxx xxx	
			MAC2	MAC3
DC supply[4]				
U_{NDC}	Rated supply voltage at DC input connector X4	V_{DC}	70 (24 ... 80)	
P_N	Rated installed load	W	960	
P_{VN}	Rated losses[5]	W	t.b.d.	
Losses if diverging from nominal load: $P_V = P_{V0} + P_{VI}$				
P_{V0}	Basic losses	W	t.b.d.	
$P_{VI/IO}$	Current-dependent losses per A	W/A	t.b.d.	
U_O	Rated output voltage[1]	V_{DC}	60	
		V_{AC}	45	
I_{ON}	Rated output current[6] per axis	A_{DC}	10	
		A_{RMS}	7.1	
$P_{ON\ DC}$	Rated output power with DC motor[1] per axis	W	650	
$P_{ON\ AC}$	Rated output power with AC motor[1] per axis	W	477	545
I_{OP}	Peak output current[2] per axis	A_{DC}	20	
		A_{RMS}	14	
U_{BUSN}	Rated DC link voltage	V_{DC}	60	
U_{BUSP}	max. DC link voltage	V_{DC}	70	
U_P	Overvoltage trip	V_{DC}	90	
C_L	DC link capacity	µF	660	
E_{N-P}	Regenerable capacity	Ws	0.5	
For an explanation of the footnotes see next page.				

4.2 General technical data

Table 4.3: General technical data, control signals

No.	Control signal	Unit	
1	24 V supply (current draw without outputs)	V	24 ±10 %
		A	0.8
10	Digital control signal inputs	V	LOW 0 – 7, HIGH 12 – 36
		mA	10 (at 24 V)
4	Digital control signal outputs	V	24
		A	0,5

Table 4.4: General technical data, external fuses

70 V DC supply	max. 16 A (slow) [4]
Note: When the device is used in an UL environment the overcurrent protection equipment has to comply to UL Class RK5 or UL489!	
24 V DC supply	max. 10 A (fast)
External ballast resistance (not accessory resistors DPRxx-xxx)[7]	10 A (fast)

Table 4.5: General technical data, ambient conditions

Ambient conditions			
ECOVARIO® is designed for ambient conditions of class 3K3 following EN 50178.			
Symb.	Condition	Unit	
T_A	Ambient temperature during operation with nominal load [2)5)]	°C	5 – 40
	Degree of humidity (not condensing)	% rel. F.	5 – 85
p	Air pressure	mbar	860 – 1 060
	Cooling		the closed cubicle has to be sufficiently ventilated.
h	Installation altitude	m	up to 1 000 without restriction of power
	Installation position		The technical data refer to a vertical position..
	Protection class		IP20

Table 4.6: General technical data, dimensions and weight

Abmessungen und Gewichte	**Einh.**	**ECOVARIO® 114 D**
Dimensions w x h x d	mm	42 x 279 x 167
Weight of unit	kg	1.35
Weight with shield set	kg	1.45

Footnotes to tables 4.1 to 4.6

1)	The data refer only to the internal data of the servo amplifier. Modifications of the input voltage due to line supply fluctuations are not taken into consideration. That means that with 15 % less input voltage the output data (U_O, P_O) have to be reduced by 15 %. For motors with a low inductivity the motor design for the maximum velocity should be between 25% and 50% below the specified voltages because otherwise the ripple current would be very high. For motors with high inductivities a higher reduction could be necessary in order to achieve a sufficient dynamic performance. **The maximum power for both axes together is given by the current carrying capacity of X4A. The maximum total output power for an operating voltage of 60V_{DC} is approx. 900W.**
2)	If the heat sink temperature rises over 90 °C or if the ambient temperature passes the upper limit (40°C) the servo amplifier is switched off
3)	The DC link connection (X4) has no inrush-current limiting. Therefore appropriate circuits have to be integrated in the central power supply. The power supply also has to be resistant against regenerated energy. It must regulate the DC link voltage during dynamic operation under the limit U_B. If the regenerating energy is higher than the energy consumed by all units connected to the DC bus, the power supply must have a load circuit (ballast resistor).
4)	The value for U_N represents the nominal DC link voltage. The value for U_P represents the maximum voltage which can emerge in the DC link circuit. This voltage is relevant for the dimensioning of the motor winding. Also the dielectric stress at a rectangular voltage of 32 kHz and a du/dt of maximum 12kV/µs has to be taken into account. U_P is dependent on the applied voltage.
5)	Environmental conditions for the design of the cabinet. The losses P_{VN} refer to nominal operation with I_{ONenn} and the maximum output power P_{DC} At deviations the rated loss can be estimated as described.
6)	Rated continuous current for dimensioning. The effective value of the motor current must not exceed this value because otherwise some components will not reach their rated lifetime. This maximum value is part of the firmware and cannot be changed (Ixt limit). If the motor has a lower rated current, this value should be reduced. The maximum time constant of the necessary filters depends on the unit, its range is 1 – 10 s. Also this value cannot be increased but lowered to protect the motor. These two parameters define indirectly the allowed time of the peak current.

4.3 Order key

Table 4.7: Order key ECOVARIO®114 D

ECOVARIO®	x	xx	x	x	-	x	x	-	xxx	xxx
										No. of parameter set (three digits)
										No. of firmware (three digits)
								Approvals		
								A: CE, standard design		
								B - I: CE, special design		
								J: CE, UL, standard design		
								K, M - Z: CE, UL, special design		
								L: CE, UL, encoder interface with 9-pole D Sub connectors		
							Type of field bus			
							A: CAN + RS485			
							B: CAN + RS232			
							F: CAN + RS485 + PROFIBUS DP-V0			
							G: CAN + RS232 + PROFIBUS DP-V0			
							H: CAN* + Profinet + RS485			
							I: CAN* + Profinet + RS232*			
							K: CAN + Ethernet + RS485			
							L: CAN + Ethernet + RS232			
							P: CAN + EtherCAT® + RS485			
							Q: CAN + EtherCAT® + RS232			
					Options					
					R: Safety function „Safe Torque Off“ (STO)					
				Supply						
				D: 2 axes, DC supply						
			Current rating (rms for 5 s)							
			14: max. 14 A							
		Voltage rating (DC-Bus)								
		1: max. 100 V								
	Name of the unit									

*) CAN/RS232 as service interface for ECO Studio only; no object dictionary acc. to CANopen DS402

Example ECOVARIO® 114 DR-AA-000-000:
Servo amplfier with:

- max. 100 V_{DC} DC link voltage
- max. 14 A output current
- 2 axes, DC supply
- Safety function „STO“
- CAN interface + RS485 interface
- CE approval, standard design

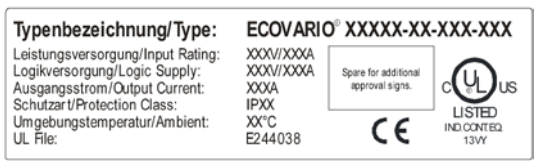

Fig 4.1: Name plate ECOVARIO®, dimensions 70 x 20 mm

4.4 Suitable types of motors

With ECOVARO® servo amplifiers various types of motors can be operated. Rotative and linear 2-phase motors of the motor ranges ECOSTEP®, ECOLIN® and ECOVARIO® as well as 3-phase and DC motors can be driven. The motors must be equipped with encoders for position and speed control. Incremental encoders, SINCOS encoders and absolute encoders can be evaluated.
It is **not** possible to drive motors with resolvers as measuring system.

The techical data in this manual refer exclusively to the encoder commutated synchronous motors mentioned in chap. 4.4.1 to 4.4.3.
If you want to drive DC motors with ECOVARIO® please contact our technical service (see www.jat-gmbh.de/distribution).

4.4.1 ECOSPEED motors

Fig. 4.2: Motor ranges 60B and 80B

The motor ranges 60B and 80B contain rotative 2-phase, encoder-commutated low-pole synchronous motors with flanges of 60 mm and 80 mm and holding torques between 0.6 and 3 Nm. The motor ranges 60C and 80C are 3-phase with holding torques between 0,93 and 3,5 Nm.
For technical data and accessories for the motors see our product catalogue „ECOVARIO®-/ECOMPACT®-/ECOSTEP® Drives“ or our web site www.jat-gmbh.de.

4.4.2 ECOSTEP® motors

Fig. 4.3: Motor ranges 17H and 23S

The motor ranges 17H and 23S contain rotative 2-phase, encoder commutated, high-pole synchronous motors with flanges of 42 mm and 56 mm and holding torques between 0.2 and 3.8 Nm.
For technical data and accessories of the motors see the product catalogue „ECOVARIO®-/ECOMPACT®-/ECOSTEP®-Antriebe“ or our web site www.jat-gmbh.de.

4.4.3 Direct linear motors

Fig. 4.4: Direct linear motor range SLM-080

Series SLM contains iron core, 2-phase, encoder commutated synchronous linear motors from 220 N to 1650 N peak force.
Series SLME provides ironless direct linear motors from 150 N to 400 N peak force.
For technical data and accessories of the motors see our product catalogue „ECOVARIO®-/ECOMPACT®-/ECOSTEP® Drives“ or our web site www.jat-gmbh.de.

4.4.4 DC servo motors

DC motors are not part of the delivery range of the Jenaer Antriebstechnik GmbH but can be operated with ECOVARIO® amplifiers. In this case we recommend strongly to contact our technical service.
The ECOVARIO® supports DC motors with brushes as well as brushless DC servo motors in conjunction with RS422 compatible standard encoders.

5 Installation

5.1 Mounting

5.1.1 Important notes

- Make sure that transport and storage did no damage to the units.
- The ambient air must not be polluted by dust, greases, aggressive gas etc. Eventually appropriate countermeasures have to be taken (installation of filters, frequent cleaning).
- The ECOVARIO 114 D with STO function has to be mounted in a cabinet which conforms to protection class IP54 (or in a comparable environment).
- Depending on the power losses an appropriate ventilation should be provided.
- Observe the mounting spaces.
- Use 60/75°C copper wire only. The accessory cables provided by Jenaer Antriebstechnik fulfill these requirements.
- At installation locations with permanent vibrations or shocks damping measures should be taken into consideration.

5.1.2 Dimensions

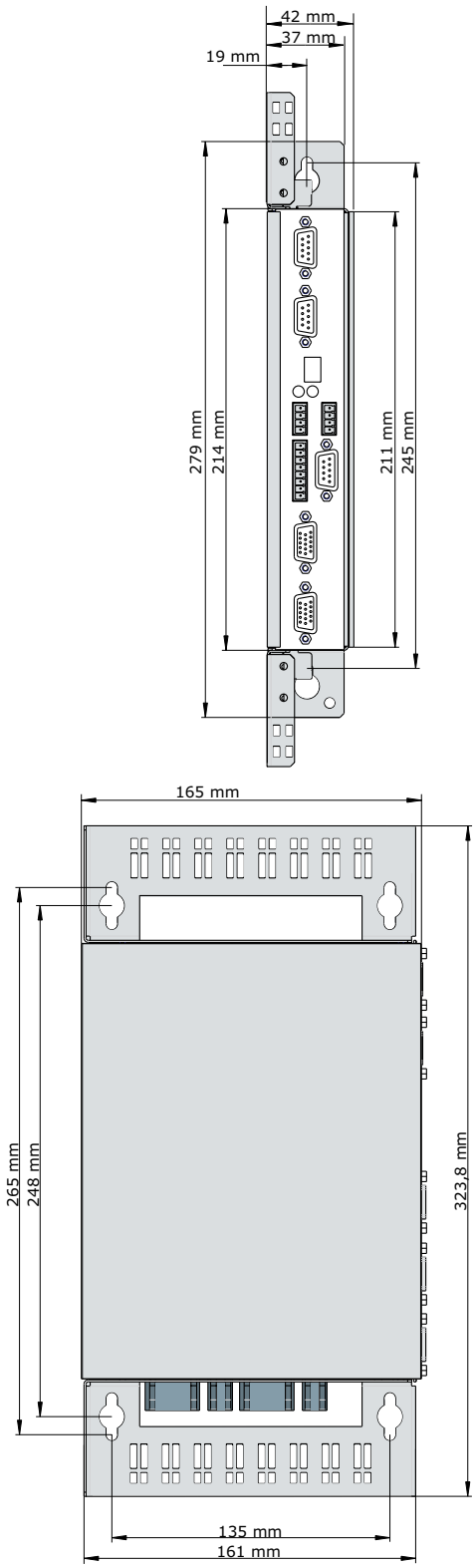

Fig. 5.1: Dimensions of ECOVARIO® 114 [mm], upper shield optional

5.1.3 Assembly

Basically, ECOVARIO®114 D is intended for **vertical** mounting (motor connector X5A, X5B on the bottom). In this mounting position devices can be operated with natural convection at ambient temperatures of up to 40°C. The ECOVARIO 114 D with STO function has to be mounted in a cabinet which conforms to protection class IP54 (or in a comparable environment).
If the ECOVARIO®114D is mounted in a cabinet cable clamps and side metal sheets assure that the connecting cables are laid EMC conform by connecting the cable shield extensively to chassis earth.
The shields with cable clamps shown in fig. 5.3 are available as accessories (see table 9.1). The lower shield is mandatory, the upper shield normally is only necassary if a ballast circuit is connected to X4A and/or X4B. It is important that the air flow is not disturbed by components above or below the servo amplifiers. The distance between the servo amplifers has to be at least 3 mm. In order to achieve a good access to the connectors at the bottom of the device the distance can be increased.

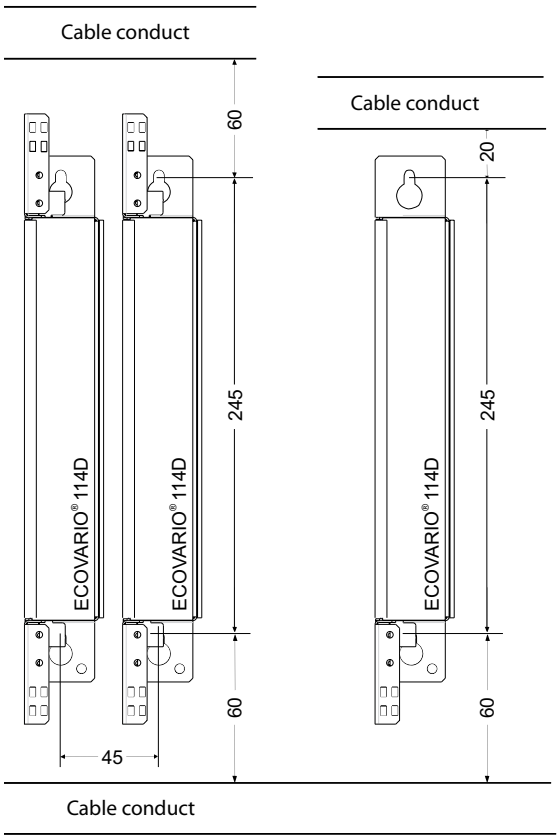

Fig. 5.2: Mounting dimensions cabinet, width [mm]

To calculate the minimal mounting depth (fig. 5.4, dim A) the form of the connectors (cable outlet direction) and the minimum bending radii of the connecting cables at the sub-D connectors have to be regarded.

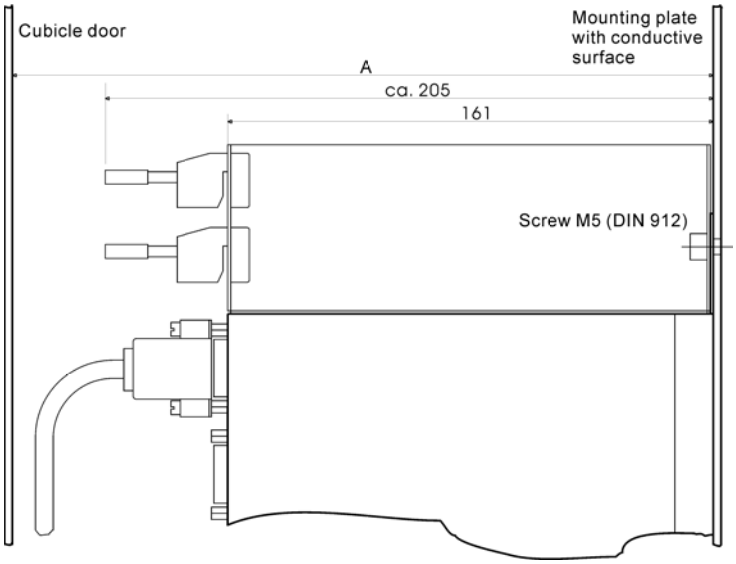

Fig. 5.4: Mounting dimensions cabinet, depth [mm]

5.2 Electrical installation

5.2.1 Important notes

All installation work may only be carried out if the machine or plant is not live and protected against restart.

When the device is used in an UL environment : Suitable for use on a circuit capable of delivering not more than 5 kA_{RMS} symmetrical amperes.
70 V_{DC} maximum when protected by (DIVQ / 7) listed circuit breaker, max. 10 A
70 V_{DC} maximum when protected by (JDDZ / 7) listed fuse, max. 10 A.

⚠ Never exceed the maximum rated voltage of **70 V_{DC} (+10 %)** at the X4 connector!

The guarding of the DC supply and the 24 V logic voltage should be carried out by the user.
Servo amplifier and motor have to be properly grounded. The protective earth conductor must have at least the same diameter as the supply cables. The servo amplifier should be mounted onto a conductive (not varnished) metal mounting plate.

5.2.2 EMC compliant installation

The supply connection of the servo amplifier should be equipped with an appropriate RFI suppression filter (mains filter, e.g. Schaffner FN2070, recommended position cf. Fig. 5.4). Always use shielded cables. To connect the shield as effective as possible to earth use the original ECOVARIO® shield set (s. table 9.1 „Original accessories ECOVARIO®“). Metal parts in the cabinet have to be interconnected extensively and and be conductive regarding HF. Used relays, contactors, solenoids etc. have to be protected against overvoltage. Supply cables and motor cables must be laid in a proper distance of control cables.

5.2.3 Connection diagram

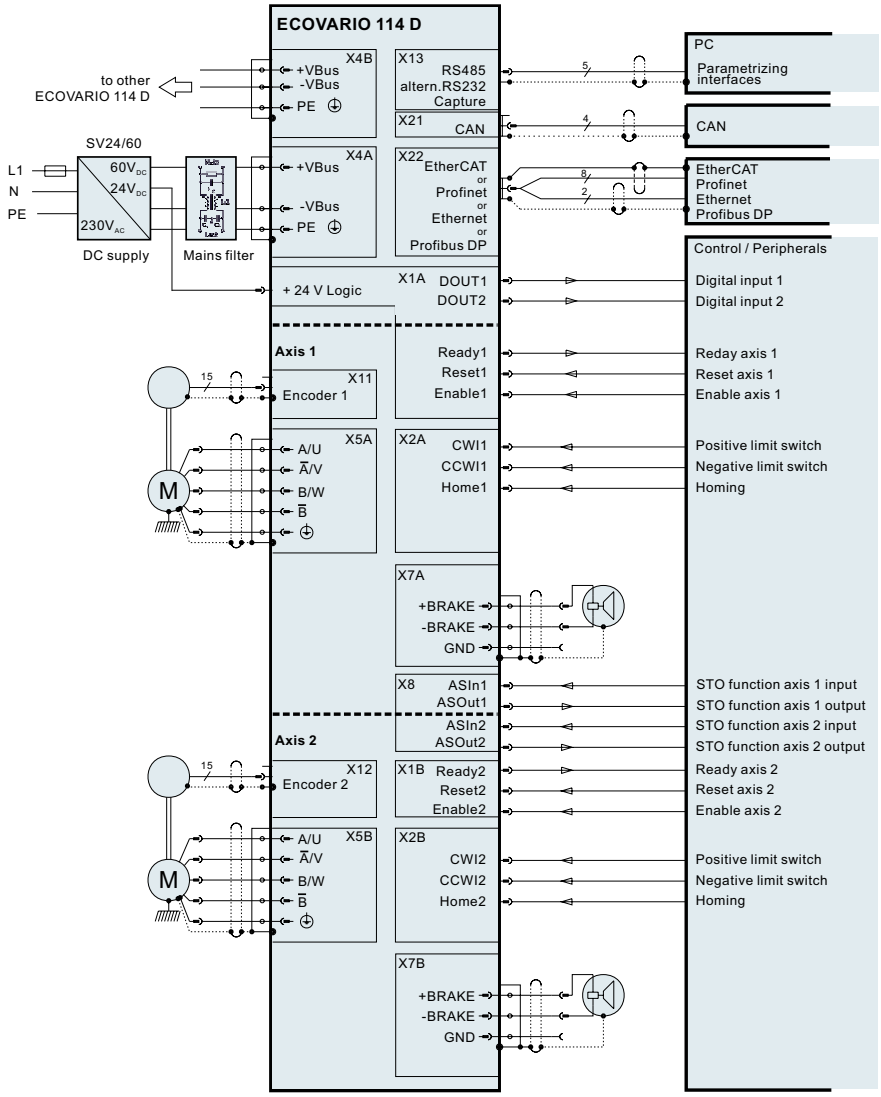

Fig. 5.4: Connection diagram ECOVARIO® 114 D

Note: The protective earth connection (PE) of the ECOVARIO® can be implemented in two different ways and thus complies to EN 60204-1, Chap. 8.2.8:

- via the stud at the bottom of the housing with a wire gauge of min. 10mm²
- via two PE wires independent of each other with the power connection wire gauge of the device (1 at the supply, connector X4A, the other at the stud at the bottom of the housing)

6 Interfaces

6.1 Overview

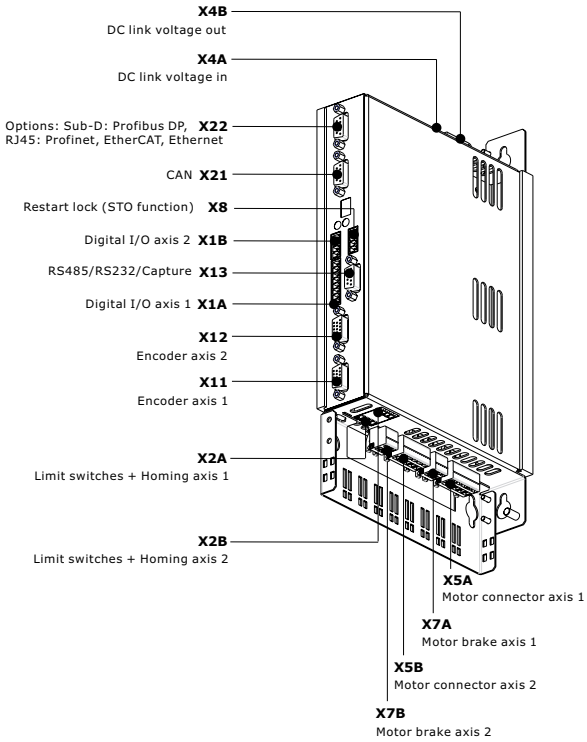

Fig. 6.1: Order of the interfaces of ECOVARIO® 114 D

The available interfaces for all ECOVARIO® D types are shown in an overview table below. Subsequently, detailed descriptions of each interface with pin assignment and block diagram are provided.
For the interfaces X1A to X8 a mating connector set is available (see table 9.1 „Original accessories ECOVARIO®“). To simplify the handling all mating connectors are labelled.

Table 6.1: Overview of interfaces ECOVARIO 114 D

Order designation	CAN	EtherCAT®	Ethernet	Profinet®	Profibus DP	RS485	RS232	STO function	Encoder input axis 1	Encoder input axis 2	Digital inputs/ outputs	Motor connec-tor axis 1	Motor connec-tor axis 2	Holding brake axis 1	Holding brake axis 2	DC power supply in	DC power supply out
ECOVARIO®114DR-AJ-000-000	X21					X13		X8	X11	X12	X1A, X1B, X2A, X2B	X5A	X5B	X7A	X7B	X4IN	X4OUT
ECOVARIO®114DR-BJ-000-000	X21						X13	X8	X11	X12		X5A	X5B	X7A	X7B	X4IN	X4OUT
ECOVARIO®114DR-FJ-000-000	X21				X22	X13		X8	X11	X12		X5A	X5B	X7A	X7B	X4IN	X4OUT
ECOVARIO®114DR-GJ-000-000	X21				X22		X13	X8	X11	X12		X5A	X5B	X7A	X7B	X4IN	X4OUT
ECOVARIO®114DR-HJ-000-000	X21*			X22		X13		X8	X11	X12		X5A	X5B	X7A	X7B	X4IN	X4OUT
ECOVARIO®114DR-IJ-000-000	X21*			X22			X13*	X8	X11	X12		X5A	X5B	X7A	X7B	X4IN	X4OUT
ECOVARIO®114DR-KJ-000-000	X21		X22			X13		X8	X11	X12		X5A	X5B	X7A	X7B	X4IN	X4OUT
ECOVARIO®114DR-LJ-000-000	X21		X22				X13	X8	X11	X12		X5A	X5B	X7A	X7B	X4IN	X4OUT
ECOVARIO®114DR-PJ-000-000	X21	X22				X13		X8	X11	X12		X5A	X5B	X7A	X7B	X4IN	X4OUT
ECOVARIO®114DR-QJ-000-000	X21	X22					X13	X8	X11	X12		X5A	X5B	X7A	X7B	X4IN	X4OUT

*) CAN/RS232 as service interface for ECO Studio only; no object dictionary acc. to CANopen DS402.

6.2 Control signals

The control signals are programmable by means of ECO Studio or on object level.

6.2.1 X1A: Digital inputs and outputs, 24 V

Table 6.2: Pin assignment connector X1A

Signal	Pin	Description	
OUT1	1	Digital output axis1 $I_{O\,max}$ = 0.5 A	$I_{Ogesamt}$ = max. 1 A
OUT2	2	Digital output axis 2 I_{Omax} = 0.5 A	
READY1	3	Ready/Digital output axis 1 I_{Omax} = 0.5 A	
RESET1	4	Reset/Digital input axis 1	
ENABLE1	5	Enable/Digital input axis 1	
GND24V	6	24 V ground	
+24V	7	24 V supply (logic voltage)	
GND24V	8	24 V ground	

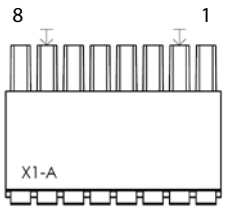

Fig. 6.2: Mating connector X1A: FMC 1,5/8-ST-3,81 2CNBD2:-ASO, 17 03 60 4 Phoenix

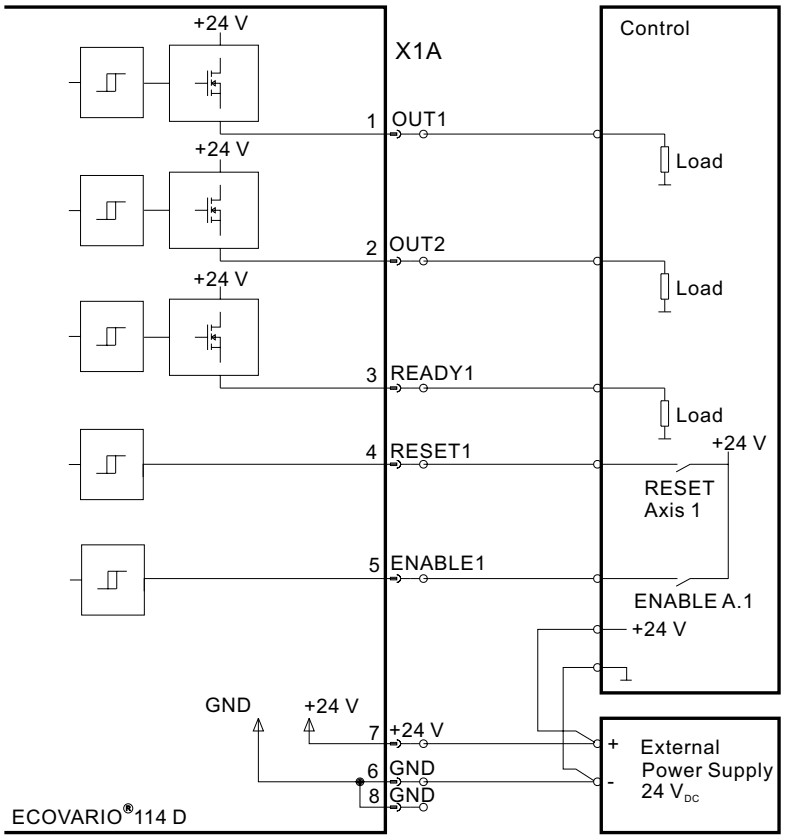

Fig. 6.3: Connector X1A: Circuit of the digital inputs and outputs axis 1/2

Axis 2:

Table 6.3: Pin assignment connector X1B

Signal	Pin	Description
READY2	1	Ready/Digital output axis 2 I_{Omax} = 0.5 A
RESET2	2	Reset/Digital input axis 2
ENABLE2	3	Enable/Digital input axis 2
+ 24 V IO	4	24 V IO voltage

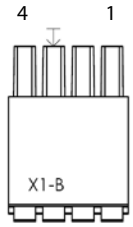

Fig. 6.4: Mating connector X1B FMC 1,5/4-ST-3,81 CN3BD2:-BSO 17 03 06 5 Phoenix

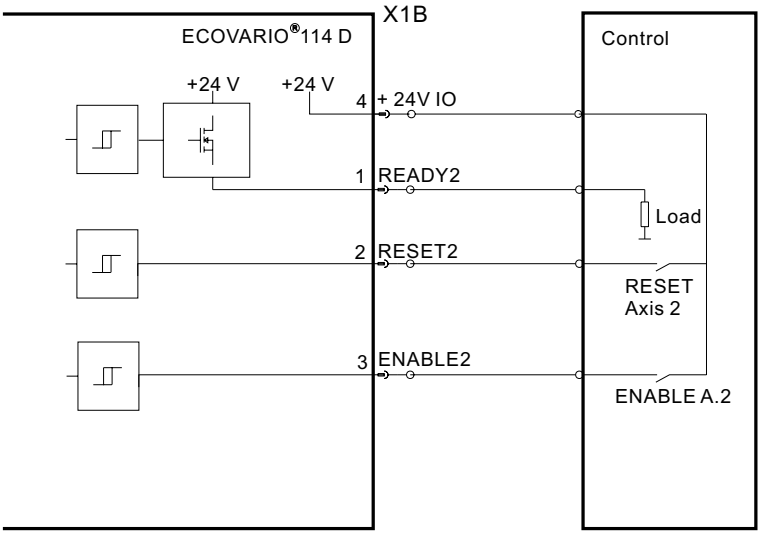

Fig. 6.5: Connector X1B: Circuit of the digital inputs and outputs axis 2

6.2.2 X2: Digital Inputs

Table 6.4: Pin assignment connector X2A

Signal	Pin	Description
+ 24 V IO	1	24-V IO voltage
CWI1	2	Positive limit switch axis 1
CCWI1	3	Negative limit switch axis 1
HOME1	4	Homing switch axis 1

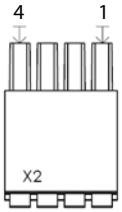

Fig. 6.6: Mating connector X2A, X2B FMC 1,5/4-ST-3,81 2CNBD2:-X2SO, 17 03 06 6 Phoenix

Table 6.5: Pin assignment connector X2B

Signal	Pin	Description
+ 24 V IO	1	24 V IO voltage
CWI2	2	Positive limit switch axis 2
CCWI2	3	Negative limit switch axis 2
HOME2	4	Homing switch axis 2

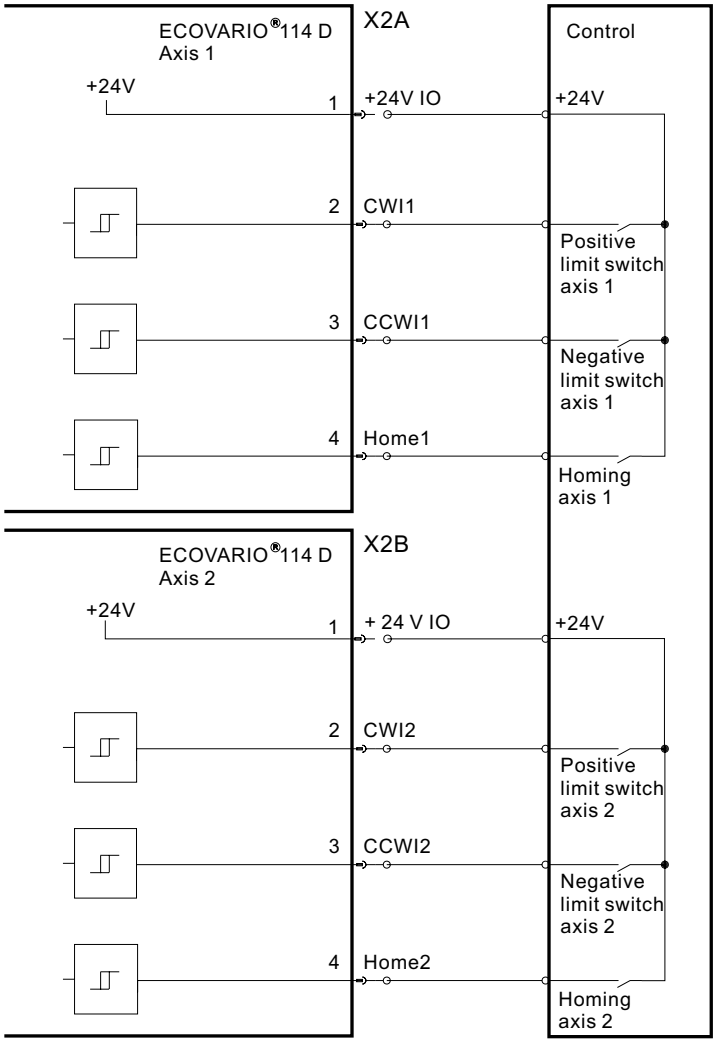

Fig. 6.7 Connector X2A, X2B: Circuit of the digital inputs

6.3 Power interfaces

6.3.1 X4IN, X4OUT: DC link voltage and ballast resistor

The connector X4IN is used for direct DC supply. Via the connector X4OUT the supply voltage can be forwarded to other devices.

When the device is used in an UL environment : Suitable for use on a circuit capable of delivering not more than 5 kA_{RMS} symmetrical amperes.
70 V_{DC} maximum when protected by (DIVQ / 7) listed circuit breaker, max. 10 A
70 V_{DC} maximum when protected by (JDDZ / 7) listed fuse, max. 10 A.

In case of direct DC supply of the DC link, the inrush current is not limited by the servo amplifier. Therefore special limitation measures have to be taken in the external power unit. If energy is regenerated, the power unit must be equipped with a ballast circuit in case the regenerated energy is higher than the energy consumed by all consumers connected to the DC bus.

Table 6.6: Pin assignment connector X4IN

Signal	Pin	Description
-L	1	- DC link
+L	2	+ DC link (24 ... 70 V)
PE	3	PE conductor

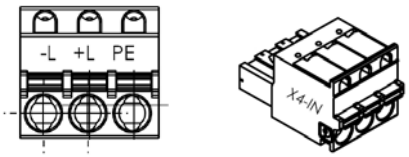

Fig. 6.8: Mating connector X4IN:
FKC 2,5 HC/3-ST-5, 08BDS:-PE 17 03 06 8 Phoenix

Table 6.7: Pin assignment connector X4OUT

Signal	Pin	Description
PE	1	PE conductor
+L	2	+ DC link (24 ... 70 V)
-L	3	- DC link

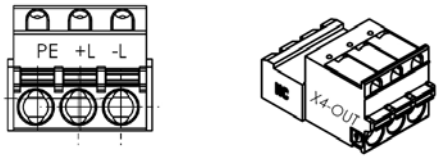

Fig. 6.9: Mating connector X4OUT:
FKC 2,5 HC/3-ST-5, 08BDS:PE-L 17 03 07 0 Phoenix

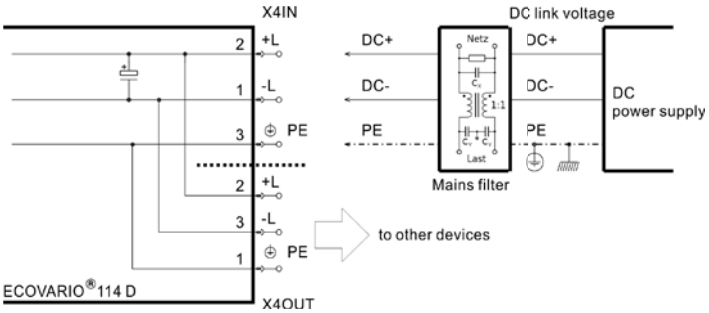

Fig. 6.10: X4IN, X4OUT: DC link circuit

6.3.2 X5A, X5B: Motor

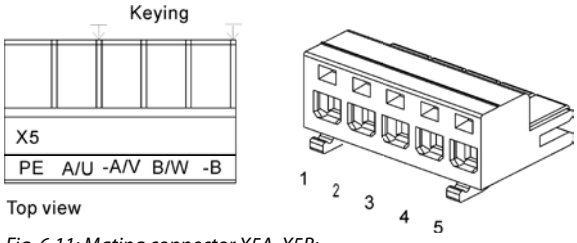

Fig. 6.11: Mating connector X5A, X5B:
ZEC 1,5/5-ST-5,0 C2,5 R1,5 5BDNZ5, 17 55 38 9 Phoenix

Using long cables (>25 m) the losses rise strongly due to the cable capacity. Therefore with long cables the technical data of the drive are reduced, further too high leakage currents can lead to indeliberare activation of the circuit breakers.
For all available types of cable see chap. 9.3.

Table 6.8: Pin assignment connector X5A, X5B

Signal	Keying	Pin	2-phase motor	3-phase motor	DC Motor
Phase A (motor U)	A/U	2	Phase A	Connection U	Conn. DC+
Phase A- (motor V)	-A/V	3	Phase A-	Connection V	Conn. DC-
Phase B+ (motor W)	B/W	4	Phase B	Connection W	free
Phase B- (free)	-B	5	Phase B-	free	free
PE	PE	1	PE conductor		

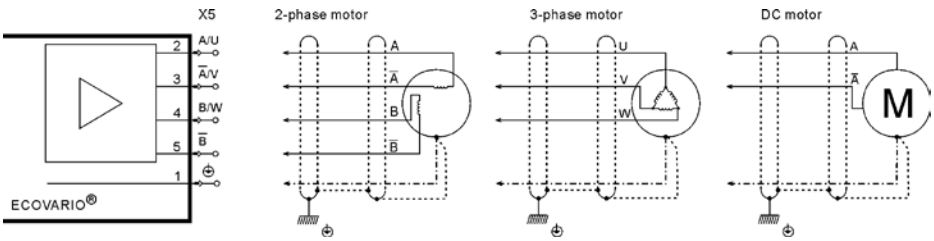

Fig. 6.12: X5: Example for connection with standard cable, e.g.
MOT-43-132-721-xxx (ECOVARIO 114 D with 2-phase motor series 23S)

Connection of motor and brake with one cable

The insulated meshes of the overall shield and of the shield of the brake cable must in any case be connected to the chasis earth or protective earth. Due to improper grounding or free mesh dangerous voltages may occur at the shield.

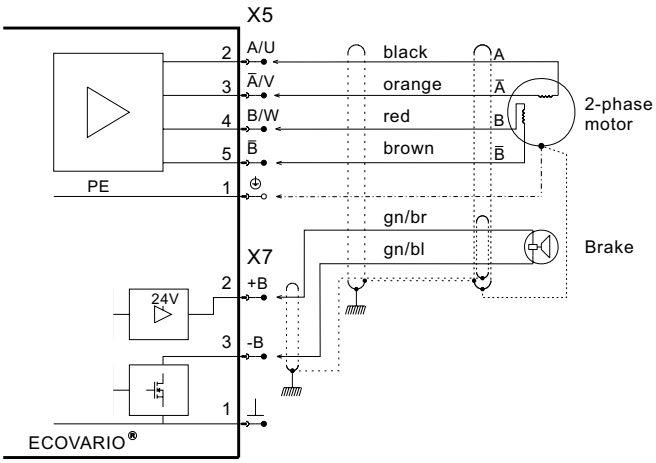

Fig. 6.13: Example for connection with standard cable
MOT45-132-722-xxx (ECOVARIO 114 D mit 23S)

6.3.3 X7A, X7B: Brake

Table 6.9: Pin assignment connector X7A, X7B

Signal	Zeichen	Pin	
GND	⊥	1	
Brake+	+B	2	$I_{max\ peak}$ = 1 A $I_{max\ cont.}$ = 0.5 A
Brake-	-B	3	

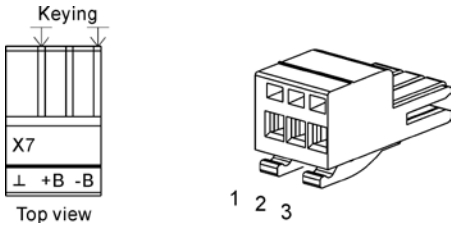

Fig. 6.14: Mating connector X7A, X7B:
ZEC 1,0/3-ST-3,5 C1,3 R1,3 NZX7, 19 98 20 5 Phoenix

If the control mode is choppered the holding current is reduced after pulling the brake.

If the current consumption of the brake is higher, the static version is suitable for connecting a relay (cf. fig. 6.16).

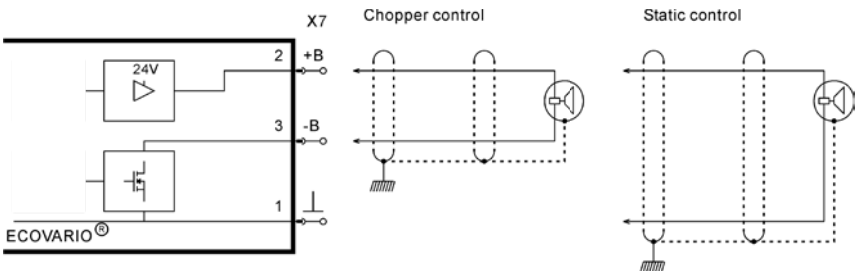

Fig. 6.15: Brake connection, brake current $I_{max} \leq 0{,}5$ A

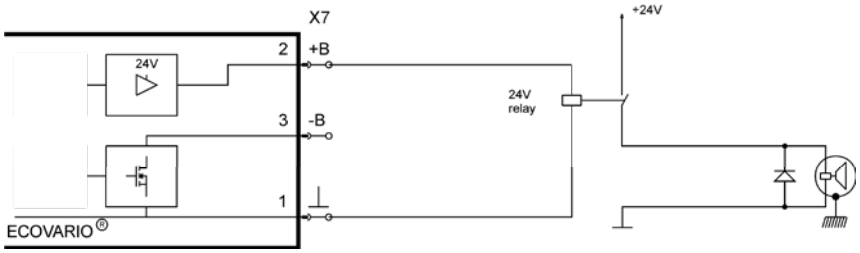

Fig. 6.16: Brake connection, brake current $I_{max} > 0{,}5$ A

6.4 Safety functions

6.4.1 X8: Restart lock / Safe torque off (STO)

The versions ECOVARIO® 114 DR-xx-xxx xxx of the servo amplifier ECOVARIO® 114 D contain the safety function „Safe Torque Off“ (STO) according to EN 61800-5-2 and EN ISO 13849-1: 2006. The function also conforms to an uncontrolled stop according to category 0 of IEC 60204-1. The safety function is used to prevent the drive from starting indeliberately.

WARNING / AVERTISSEMENT	The „Safe Torque Off“ function does not switch off the power supply of the DC link voltage of the servo amplifier. Thus, maintenance of electrical parts of the motor or the servo amplifer may only be carried out after the drive system has been disconnected from the power supply.	*La fonction „Safe Torque Off“ ne coupe pas la tension du circuit intermédiaire de l'amplificateur de servomoteur. Pour ces raisons, des travaux d'entretien sur les parties électriques de l'amplificateur ou sur le moteur ne doivent être réalisés qu'après avoir coupé l'alimentation électrique du système d'entrainement.*

The safety function „Safe Torque Off, STO“ is implemented together with the standard functionality of the ECOVARIO® 114 D with only a few components related exclusively to the safety function.

The STO function meets the requirements to SIL2 or PLd respectively according to EN 61800-5-2 or EN ISO 13849-1.

The function is established by means of the circuitry shown in Fig. 6.18. The signals are lead to the connector X8. Further, the signals Enable and Ready of connector X1A (axis 1) or X1B (axis 2), respectively, are used.

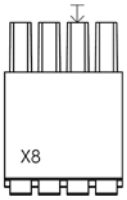

Fig. 6.17:
Mating connector X8:
FMC 1,5/4-ST-3,81 CN2BD2:
X8SO 17 03 06 7 Phoenix

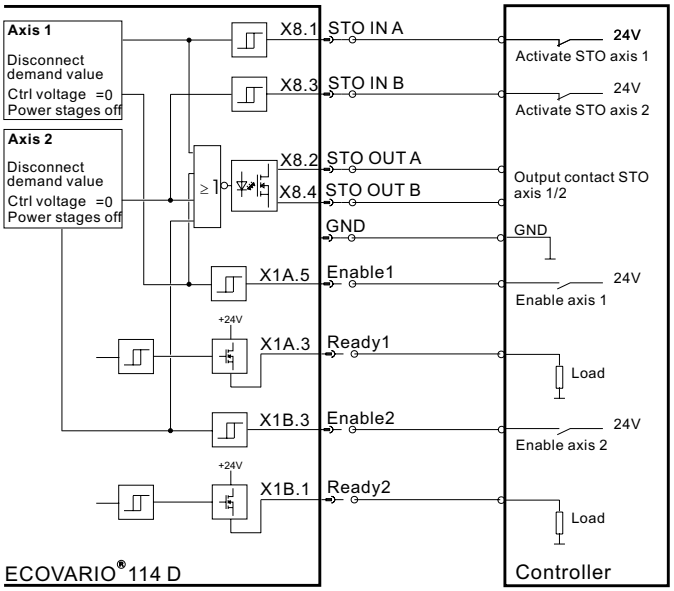

Fig. 6.18 Connector X8, circuit of the STO function

Table 6.11: Pin assignment connector X8

Signal	Pin	Description
STO IN A	1	STO function axis 1 input
STO OUT A	2	STO function axis 1+2 output contact
STO IN B	3	STO function axis 2 input
STO OUT B	4	STO function axis 1+2 output contact

Table 6.11a: Signals used for STO on connector X1A, X1B

Signal	Conn.	Pin	Description
Enable1	X1A	5	Enable axis 1
Ready1	X1A	3	Ready for operation axis 1
Enable2	X1B	3	Enable axis 2
Ready2	X1B	1	Ready for operation axis 2

Using the STO function

The internal control logic switches off the power stages of the servo amplifier and zeroes the demand values. The inputs and outputs can be connected to an external safety PLC.
Advantage: The DC link rests charged. Only low voltages are switched, the extend of wiring and components is reduced.

Implementation of the STO function

A block diagram of the components which contribute to the STO function is shown in Fig. 6.19. At the input side, the function is implemented in the same way for both axes. As an example, the description is related to axis 1.

Channel I:
If a voltage of +24 V is applied to the input STO IN A and to the Enable input (channel II) and software enable is set the servo amplifier operates normally. If the voltage at the ASIn decreases, the STO function becomes effective by switching off the 15V voltage of the power stage. A restart is only possible if a 24 V voltage is applied again to the inputs STO IN A and Enable (channel II), software enable is set and the error status of the servo amplifier has been reset.

The safe status of the restart lock (channel I) is signalled by the contact between STO OUT A and STO OUT B (if the drive is blocked the contact is closed). The signal can be fed to a higher-level safety PLC and can e.g. be used for enabling a door lock.

Channel II:
If the 24 V voltage is not applied to the Enable input, the power stage is switched off via a FPGA. The STO function protects against a restart. A restart is only possible if a 24 V voltage is applied again to the inputs STO IN A and to the Enable input, software enable is set and the error status of the servo amplifier has been reset. The safe status of the restart lockout (channel II) is signalled via the Ready output (if the restart lockout is active, the level at the Ready output is 0 V).

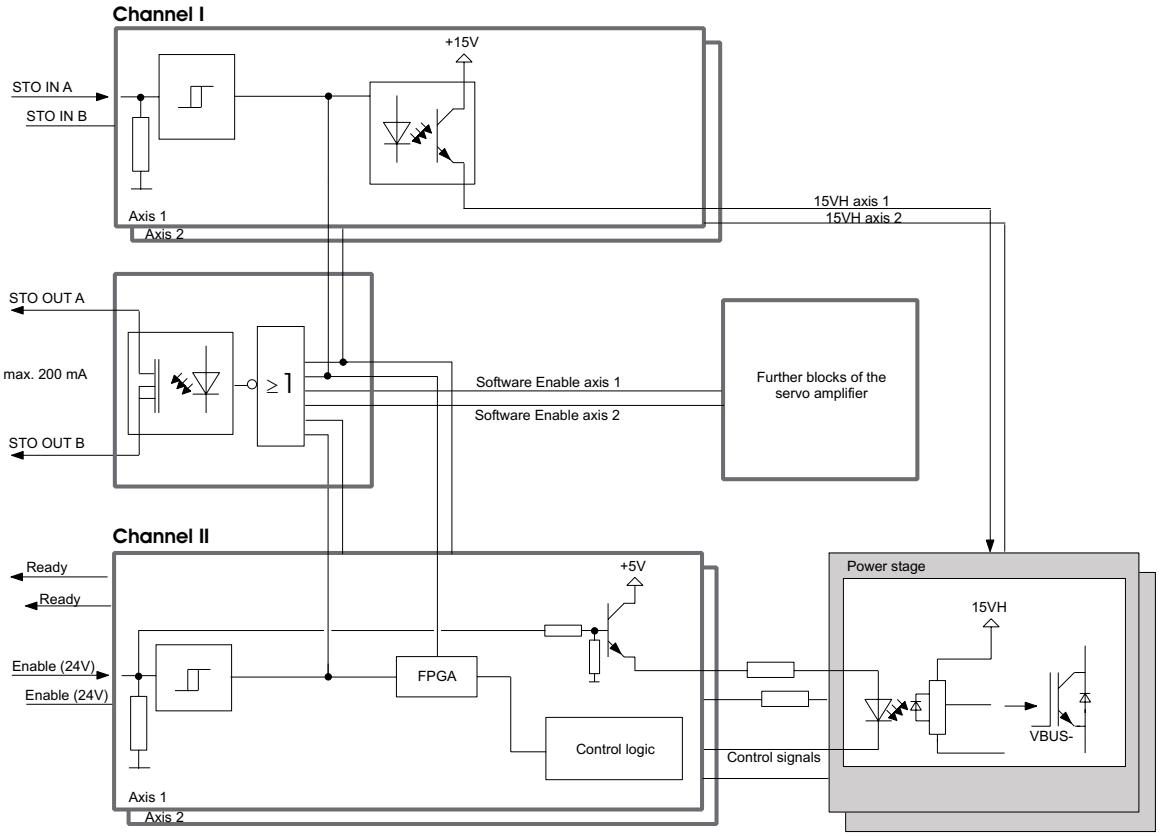

Fig. 6.19: Block diagram: Implementation of the safety function STO

WARNING / *AVERTISSEMENT*	The STO function may only be activated by an automatic control or by manual activation if the motor is no longer rotating and the servo amplifer has been switched to „inactive" (24 V are not applied to „Enable" input). Drives with a suspended load must have an additional safe mechanical blocking. Via the safety PLC the monitoring contact ASOut bridges the safety equipment of the machine (e.g. safety position switches at safety doors). The safety area is protected from indeliberate restart of the device.	*La fonction STO ne doit être activée manuellement ou de façon pilotée qu'après l'arrêt du freinage et que le frein d'arrêt a pris, que l'amplificateur de servomoteur soit devenu inactif (signal „Enable" retiré). Le contact de surveillance ASOut ponté dans le circuit de sécurité de l'installation des équipements de sécurité (par exemple des contacteurs de sécurité sur des portes). La zone de sécurité est maintenant protégée contre le redémarrage de l'entrainement.*

Relevant aspects of safety
See also the prescribed use of the servo amplifier ECOVARIO® 114 D described in chap. 2.6 and the operating conditions mentioned there.

As Fig. 6.19 shows the STO function is implemented by two channels. If a single error occurs, the function still remains operative via the other channel.

If the restart lock is active, all driver transistors are in high resistance state. If a current in the motor is produced by damaged driver transistors the high-pole servo motors as well as the 2-phase servo motors cannot start because the necessary rotating field is not created. In the worst case, however, a short hitch can occur at the motor shaft (movement of max. 1/2 pole pair of the motor).

If the internal semiconductor switch is damaged or a cable is broken the safety equipment switches off the drive because in this case the bridging of the safety equipment is not effective.
If the restart lock is activated by an automatic control, the control signal must be monitored to make sure that the restart lock cannot be activated if the motor is rotating.

Commissioning and checking the STO function
During commissioning of the machine, after changing components or restructuring the wiring the function of the safety equipment including the STO function must always be checked as described in table 6.12. This check is also necessary after modifications of the parameters of after a download of a new firmware. If none of the mentoined cases applies, the function of the safety equipment has to be checked at least once a year. Per axis proceed as follows:

Table 6.12: Checking the functions of the safety equipment

Step	Measure	Check
1	Make sure that during the check the drive can run and stop unrestrictedly	
2	Stop drive controlled (target velocity=0)	
3	Disable drive (remove Enable signal)	Measure the signal level at the Ready signal: has to be inactive (0 V).
4	Activate the holding brake, if any	
5	Remove the +24 V voltage at STO IN, i.e. activate the STO function	
6	Open safety equipment (e.g. safety door) without interfering with the safety area.	Line contactor must stay „on".
7	Pull off mating connector X8 from the respective servo amplifier.	Line contactor must drop.
8	Plug in mating connector X8. Switch on line contactor.	

Provided that the checks are carried out regularly as described above, the example circuit below meets the requirements of performance level d according to EN ISO 13849-1.

Example of application

The example in fig. 6.20 shows a plant with 2 drives with common power supply.
The group can be blocked against indeliberate starting via S1.

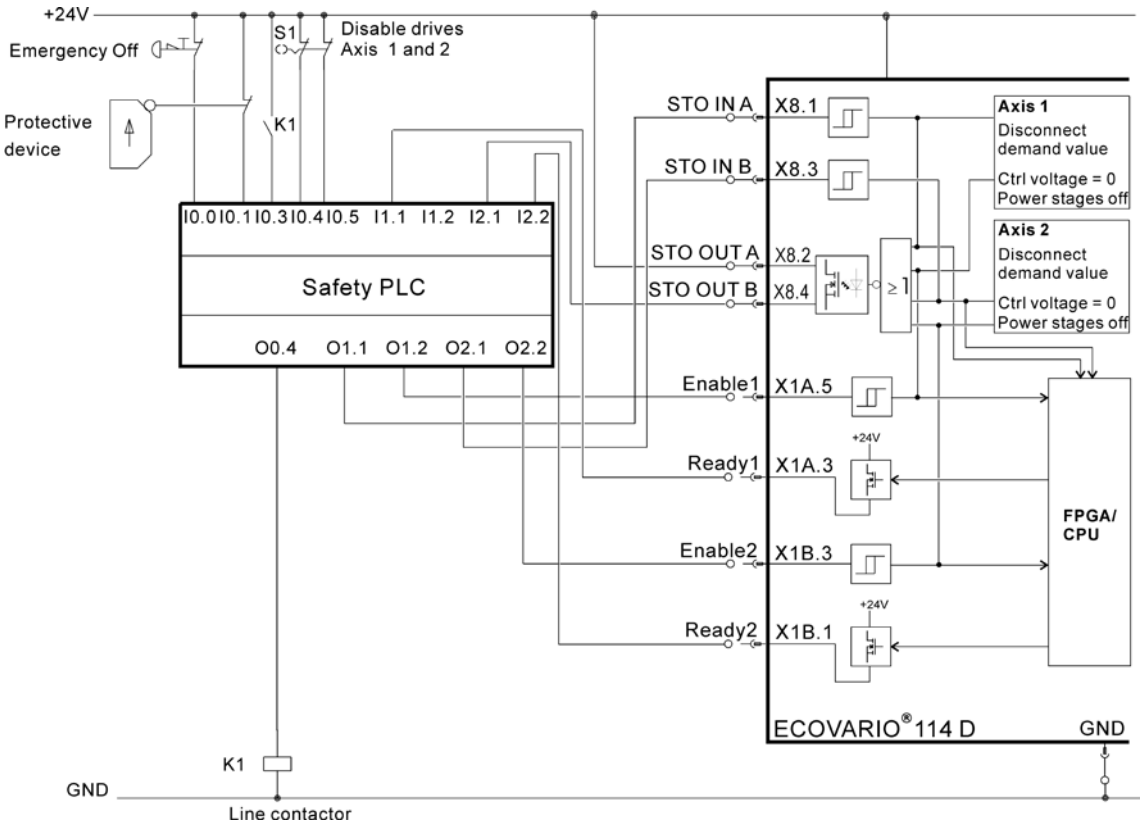

Fig. 6.20: Example for STO function

Logic table for FPGA

SW-Enable	STO IN	Enable	STO OUT	Ready
0	H	H	0	0
0	H	L	0	0
0	L	H	0	0
0	L	L	1	0
1	H	H	0	1
1	H	L	0	0
1	L	H	0	0
1	L	L	0	0

Maintenance, trouble shooting and diagnosis

The STO function and the STO interface do not require any maintencance. However, periodical functional checks are necessary.
A check concerning the proper operation of the STO function according to table 6.12 has to be carried out:

- During commissioning of the machine
- after changing components
- after restructuring of the wiring
- after a download of a new Firmware
- after modifications of the parameters
- periodically at least once a year; the required intervals depend on the application

The following error messages are related to the STO function (list of all errors in Chap. 7.3.2):

D00	Restart lock blocks switch on	Measure: Check STO function
D01	No external Enable	Measure: Check Enable signal

Technical Data

Table 6.13: Technical data with respect to the safety standards

EN 61800-5-2	
SIL	2

EN ISO 13849-1	
PL	d
MTTFd	2051,72 years
DC_{avg}	By evaluation of the status signal up to 99% are possible
λ_d	t.b.d. • 10^{-8}

6.5 Encoders

The servo amplifier ECOVARIO®114 D has one encoder input for each axis (X11 for axis 1 and X12 for axis 2). Via an encoder splitter which is available as an accessory (DDK21, DDK22, **for all types except** ECOVARIO® 114 Dx-x**L**-xxx xxx) you have the possibility to use 2 encoder inputs per axis (cf. chapter 9.1.3).

NOTICE / *PRUDENCE*	**Never plug and pull encoder cables while they are live! Always switch off the logic supply of the ECOVARIO®. Otherwise damages to the encoder can occur.**	***Ne connectez ou ne déconnectez jamais le câble d'un codeur sous tension ! Toujours éteindre l'alimentation logique de l'ECOVARIO avant. Dans le cas contraire, le codeur pourrait être endom-magé***

Encoder inputs X11, X12
Apart from incremental standard encoders also absolute value encoders system HIPERFACE® and BISS® can be connected to the **15-pole** High-Density Sub-D socket (**all types except** ECOVARIO® 114 Dx-x**L**-xxx xxx). As an option, a version for use with sine encoder systems with 1 Vpp signal amplitude for high resolution encoder evaluation is available. Via the 9-pole Sub-D socket (ECOVARIO® 114 Dx-x**L**-xxx xxx) incremental standard encoders can be connected.

Parametrization of the encoder interfaces
For all encoders of the Jenaer Antriebstechnik GmbH complete data sets are available. With the PC software ECO Studio the data set for the selected encoder can be chosen and transmitted to the ECOVARIO®.

6.5.1 X11: Encoder Axis 1, X12: Encoder Axis 2 (all types except ECOVARIO 114 Dx xL xxx xxx)

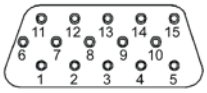

Fig. 6.21: Mating connector X11/ X12: 15-pole Sub-D high density connector, view of the solder or crimp side

Table 6.15: Pin assignments connector X11, X12

	Standard encoder (incremental) optional 2nd incremental enc.			**JAT SinCos encoder** (Optolab) optional 2nd incremental enc.			**HIPERFACE®** (Stegmann SCS)		**BISS®** (Hengstler / IC-Haus) + 2nd encoder (incremental) or JAT SinCos encoder		
Pin	Signal	1st encoder	2nd enc.	Signal	1st encoder	2nd enc.	Signal	Description	Signal	BISS encoder	2nd encoder
1	U_P	5/11 (15) V can be set, 500 mA*		U_P	5/11 (15) V can be set, 500 mA*		U_P	5/11 (15) V can be set, 500 mA	U_P	5/11 (15) V can be set, 500 mA*	
2	A	Track A		sin+	Sine +		Sine	0,8 ... 1,2 V_{PP}	A		Track A / sin+
3	B	Track B		cos+	Cosine +		Cosine	0,8 ... 1,2 V_{PP}	B		Track B / cos+
4	Z	Track N		Z	Index track		Data	Data channel	Data	Data	
5	$+T_{SENSE}$	Temp. sensor		$+T_{SENSE}$	Temp. sensor		$+T_{SENSE}$	Temp. sensor	$+T_{SENSE}$	Temp. sensor	
6	D_{GND}	Ground		D_{GND}	Ground		D_{GND}	Ground	D_{GND}	Ground	
7	/A	Track /A		sin-	Sine -		RefSin	Reference sine	/A		Track /A / sin-
8	/B	Track /B		cos-	Cosine -		RefCos	Reference cosine	/B		Track /B / cos-
9	/Z	Track /N		/Z	Index track		/Data	/Data channel	/Data	/Data	
10	$-T_{SENSE}$	Temp. sensor		$-T_{SENSE}$	Temp. sensor		$-T_{SENSE}$	Temp. sensor	$-T_{SENSE}$	Temp. sensor	
11	/B		Track /B	/B		Track /B			/Z		Track /N
12	$+V_{ENCSENSE}$	Sensor U_P		$+V_{ENCSENSE}$	Sensor U_P		$+V_{ENCSENSE}$	Sensor U_P	$+V_{ENCSENSE}$	Sensor U_P	
13	B		Track B	B		Track B			Z		Track N
14	A		Track A	A		Track A			CLK	CLK	
15	/A		Track /A	/A		Track /A			/CLK	/CLK	

*) the same supply voltage for both encoders

Connection of a second incremental or JAT SinCos encoder
If required, a further incremental or SinCos encoder can be connected to the encoder interface. If you want to use this option please plug the encoder splitter which is available as an accessory (cf. chapter 9.1.3).

Setting the supply voltage
The voltage U_P is set via the voltage applied to pin 12 ($+V_{ENCSENSE}$) of the respective encoder interface:

Tabelle 6.17: Setting the encoder supply voltage

$V_{ENCSENSE}$	U_P
+ 5 V / open	5 V
0 V	11 V

The standard cable ABS 65-300-525-xx for BISS® encoders already contains the settings for the voltage U_P. the maximum length of the cable is 50 m.

INFO / *INDICATION* ☞	**The connection of voltage dividing resistors for setting the encoder supply voltage is not possible at ECOVARIO 114 D. All cables which are no standard cables of Jenaer Antriebstechnik have to be assessed for their suitability before they are used together with ECOVARIO 114 D.**	***L'évaluation d'un diviseur de tension pour régler la tension d'alimentation du codeur n'est pas possible dans ECOVARIO 114 D. Tous les câbles qui ne sont pas câbles norme de Jenaer Antriebstechnik doivent donc être testés avant utilisation sur ECOVARIO 114 D pour leur pertinence.***

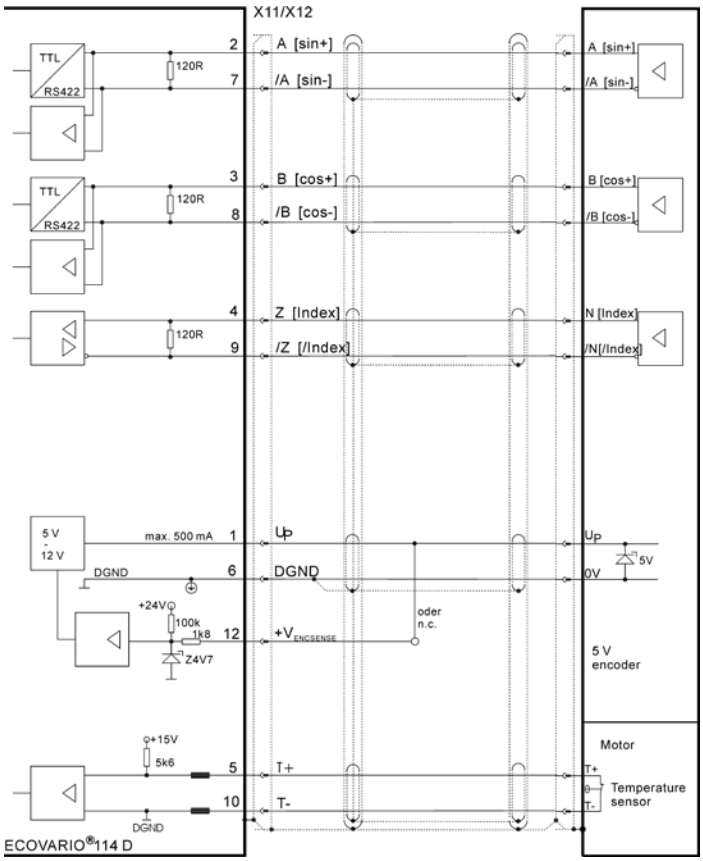

Fig. 6.23: Example for connection for a 5 V incremental encoder / SinCos encoder [deviations in brackets]

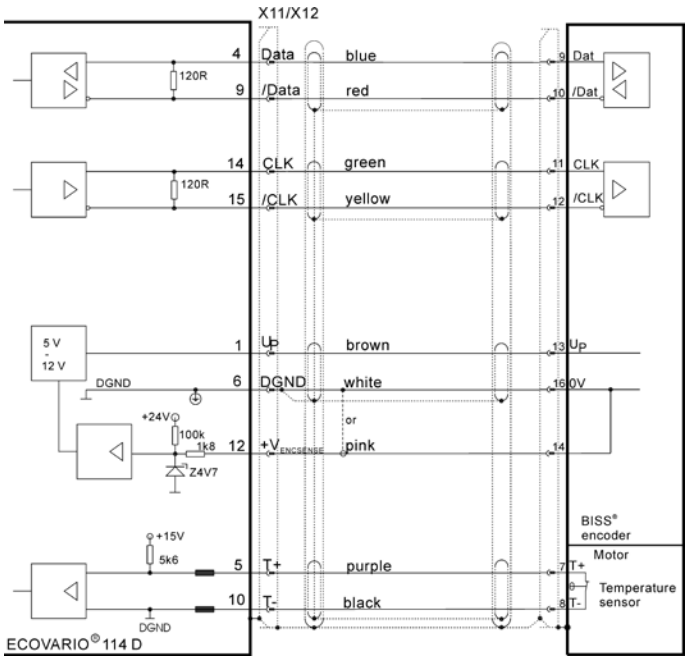

Fig. 6.24: Example for a BISS® encoder via standard cable ABS65-300-525-xx

6.5.2 X11: Encoder Axis 1, X12: Encoder Axis 2 (ECOVARIO 114 Dx xL xxx xxx)

The supply voltage U_P of the encoder is 5 V. The maximum cable length is 50 m. The maximum signal frequency is 2 MHz, that is a count rate of 8 MHz.

Table 6.19: Pin assignment connector X11, X12

Signal	Pin	Description
$+V_{ENC}$	1	5 V (0.2 A)
A	2	Track A
B	3	Track B
N	4	Track N
T+	5	Temperature sensor
D_{GND}	6	Encoder ground
/A	7	Track /A
/B	8	Track /B
/N	9	Track /N

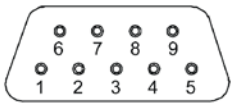

Mating connector X11, X12:
9-pole Sub-D connector
view of the solder or crimp side

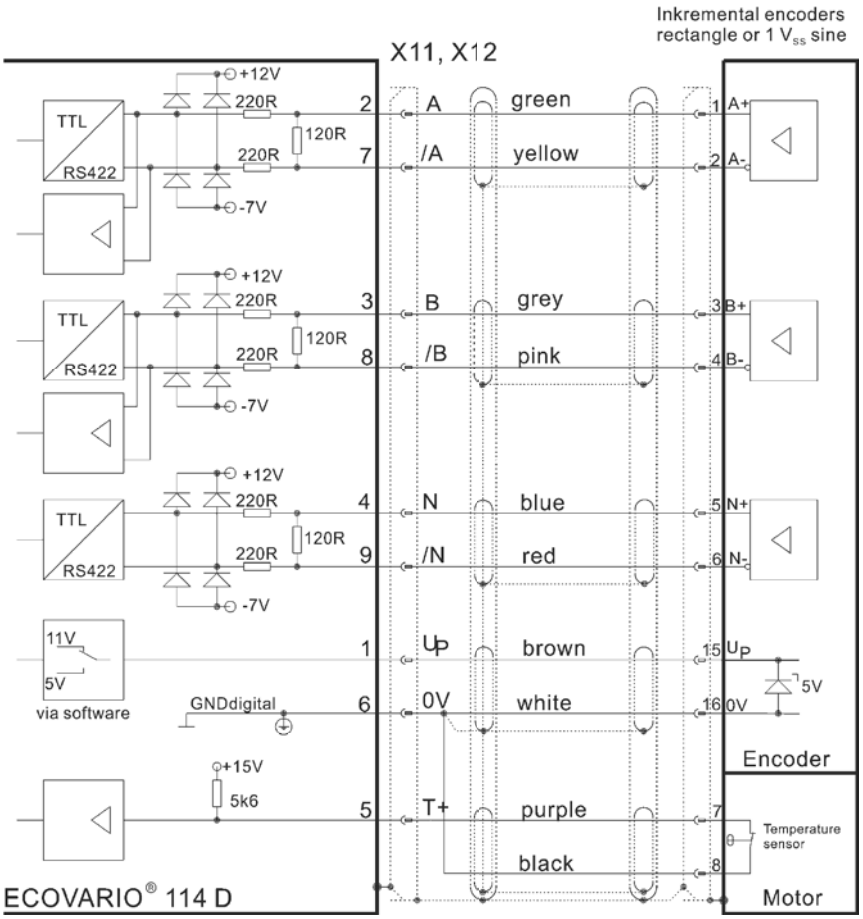

Fig. 6.29: Example for connection for 5 V incremental encoder with standard cable INK65-491-525-xxx

6.6 Serial interfaces

6.6.1 X13: RS485/RS232 interface (at ECOVARIO®114 D with 2 capture inputs)

The ECOVARIO®114 D is available with RS485 or RS232 interface with 2 capture inputs for fast position capturing.
ECOVARIO® 114 D x-A x-xxx xxx: design with RS485 interface
ECOVARIO® 114 D x-F x-xxx xxx: design with RS485 interface
ECOVARIO® 114 D x-B x-xxx xxx: design with RS232 interface
ECOVARIO® 114 D x-G x-xxx xxx: design with RS232 interface

Design with RS485 interface

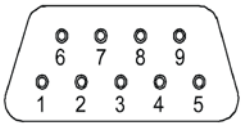

Fig. 6.25: Mating connector X13: 9-pole Sub-D connector; view of the solder or crimp side

Table 6.16: Pin assignment connector X13

Pin	Signal	Description
1	CAP1+	Capture input1 (RS422 level)
2	Rx+	Receive RS485
3	Tx+	Transmit RS485
4	CAP2+	Capture input2 (RS422 level)
5	DGND	Digital ground
6	CAP1-	Capture input1 (RS422 level)
7	Rx-	Receive RS485
8	Tx-	Transmit RS485
9	CAP2-	Capture input2 (RS422 level)

Apart from the serial interface the connector X13 provides at ECOVARIO® 114 D additionally two capture inputs with RS422 signal transmission for rapid capture of process events. The capture inputs are not galvanically separated and can also be configured as digital inputs.
The RS485 interface of the ECOVARIO® may as well serve for a 4-conductor (full duplex) as also a 2-conductor (half duplex) connector. Transmitter and receiver of the ECOVARIO® meet the specifications of EIA-RS485 (up to 250 kBaud) and are EMC-protected according to IEC 61 000-4-4.
The communication protocol allows network operation with a master (host) and up to 126 ECOVARIO® units as slaves in an RS485 network. At most 32 participants may take part in one network. The network must have a bus structure.
The adress (ID) of an ECOVARIO® is set by the front keys. Each ID may only be allocated once. ID = 0 is reserved and may not be allocated.

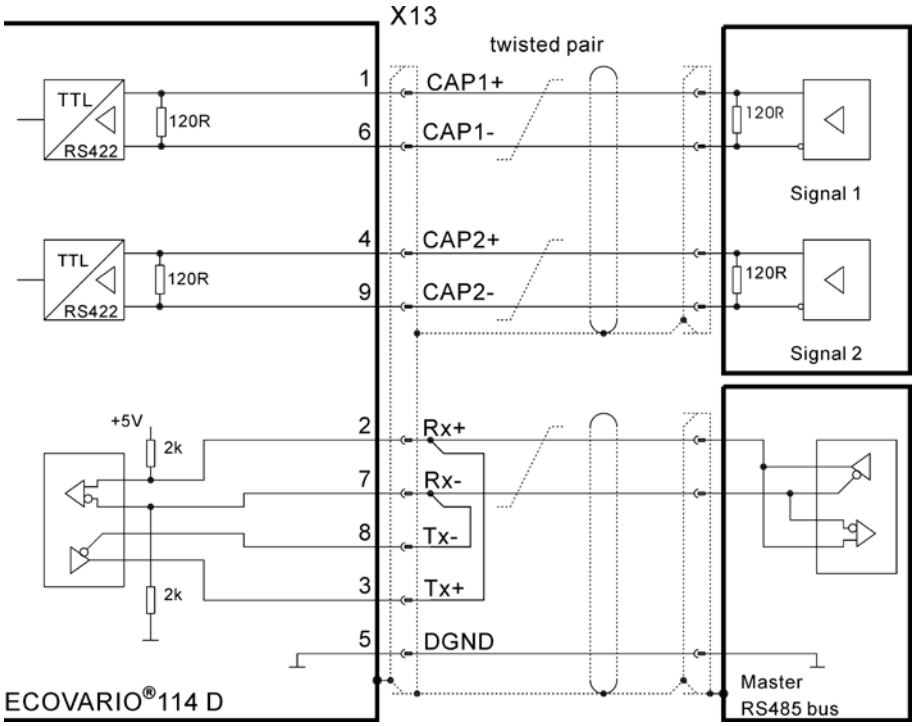

Fig. 6.25: Example for connection RS485: point-to-point connection in half duplex mode

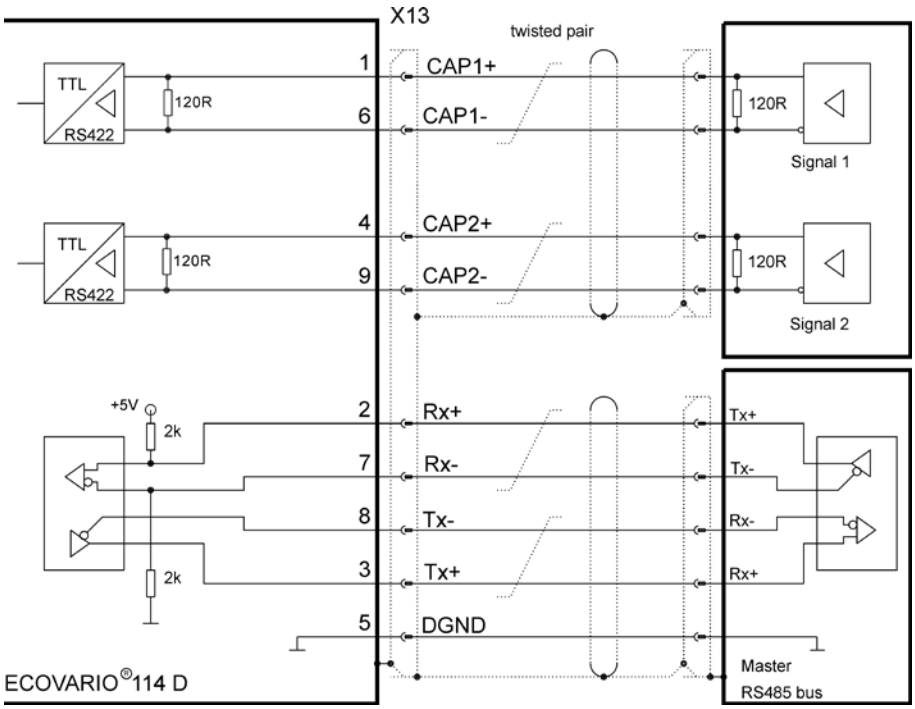

Fig. 6.26: Example for connection RS485: point-to-point connection in full duplex mode

Design with RS232 interface

Apart from the serial interface the connector X13 of the ECOVARIO® 114 D provides two capture inputs with RS422 signal transmission for rapid event capture.

Alternatively to the USB interface, via the RS232 interface a PC can be connected for setting the parameter of the ECOVARIO® 114 D. How to set the parameters of the RS232 interface is described in the manual „Object Dictionary ECOVARIO®, ECOSTEP®, ECOMPACT®, ECO-MiniDual".

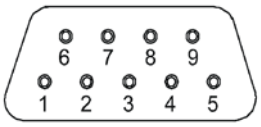

Fig. 6.27: Mating connector X13: 9-pole Sub-D connector, view of the solder or crimp side

For RS232 communication with ECOVARIO® 114 D a 3-core connection to the host is needed. The connector X13 of the ECOVARIO® 114 D is designed in a way that a 1:1 standard cable for communication with a COM port (9-pole Sub-D connector) can be used. Transmitter and receiver of the ECOVARIO® 114 D meet the specifications of EIA-232E and CCITT V.28 and are EMC-protected according to IEC 61000-4-2.

The communication protocol allows network operation of up to 126 ECOVARIO® units as slaves in a mono master network. For this option a ring structure of the RS232 network according to the scheme in fig. 6.29 is necessary.

Table 6.17: Pin assignment connector X13 in RS232 design

Pin	Signal	Beschreibung
1	CAP1+	Capture input 1 (RS422 level)
2	TxD	RS232 TxD
3	RxD	RS232 RxD
4	CAP2+	Capture input 2 (RS422 level)
5	DGND	Digitalground
6	CAP1-	Capture input 1 (RS422 level)
7	-	free
8	-	free
9	CAP2-	Capture input 2 (RS422 level)

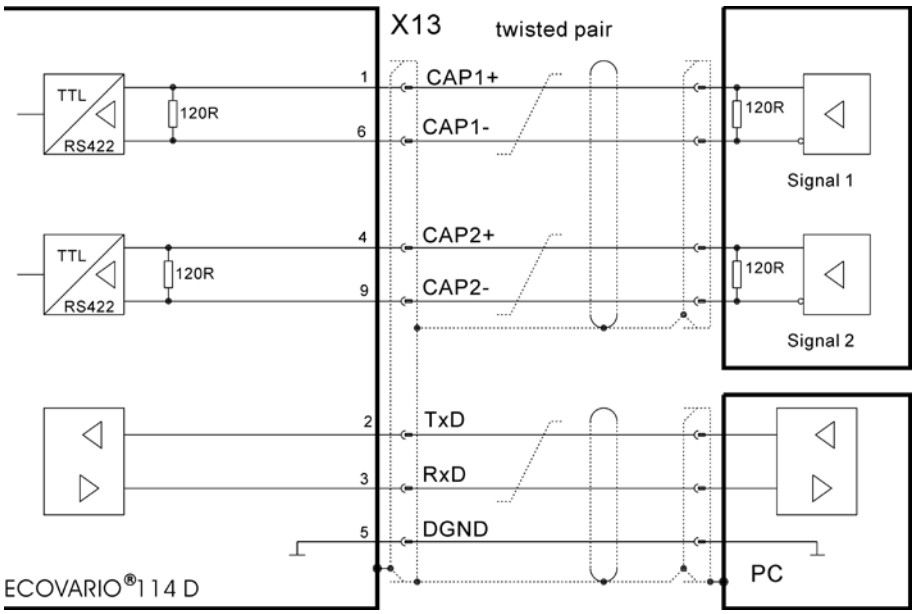

Fig. 6.28: Example for connection of an RS232 interface

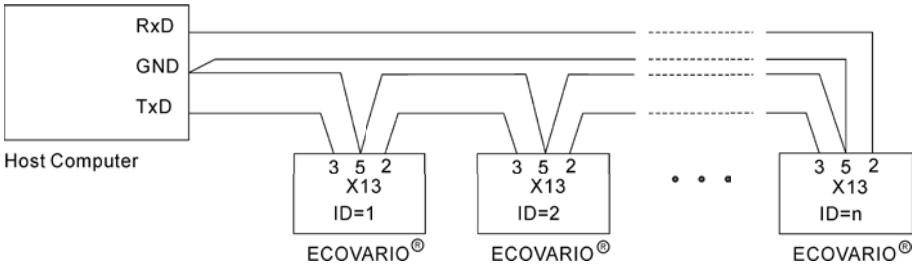

Fig. 6.29: RS232 network in ring structure

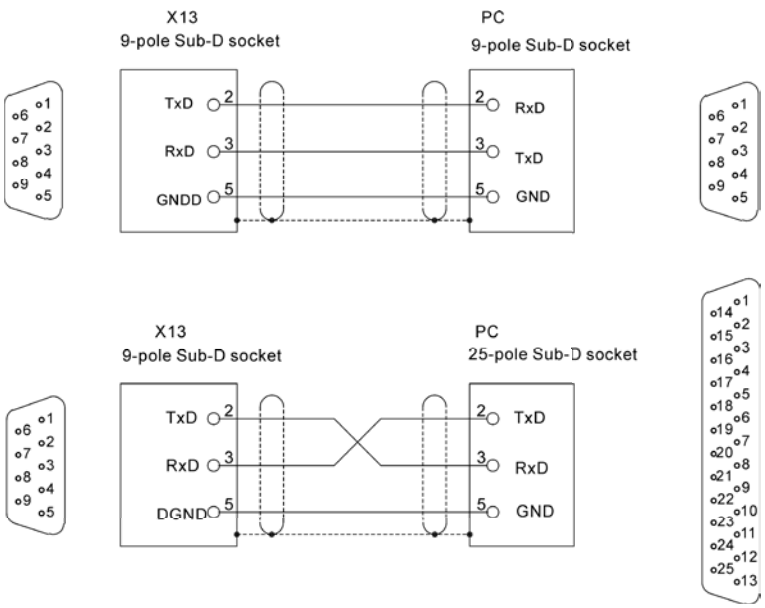

Fig. 6.30: RS232 cable ECOVARIO® – PC; view of the solder or crimp side of the plug connectors at the cable

6.7 X21: CAN interface

The CAN interface of the ECOVARIO® is based on the communication profile CiA DS 301 and the device profile CiA DSP 402 (drives and motion control)*. It must be supplied with external voltage.
Terminating resistors for busses are not built in the ECOVARIO®. A CAN bus has to be terminated with a 120 Ω resistor at the beginning and at the end. If the ECOVARIO® is operated as first or last participant at a CAN bus, it is useful to solder the terminating resistor in the mating connector of X21 between the pins 2 and 7.

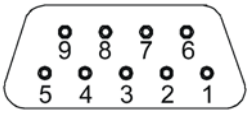

Fig. 6.31: Mating connector X21: 9-pole Sub-D socket; view of the solder or crimp side

The manual „Object Dictionary ECOVARIO®, ECOSTEP®, ECOMPACT®, ECOMiniDual“ contains a detailed description of all available functions.

The Baud rate und the device ID can be set with the front keys of the device (see chap. 7.3.3 „Key operation“) or directly via the appropriate CAN objects (also by using ECO Studio). For each axis an own device ID is used. Default setting for axis 1 is the device ID 1 and for axis 2 the device ID 2.

The following Baud rates are supported: 1 000 kBit/s, 500 kBit/s, 250 kBit/s, 125 kBit/s, 100 kBit/s, 50 kBit/s. These values accord to the register values of the common older 8 or 16 bit CAN controller (ECOSTEP® compatible) and are transformed via table into ECOVARIO® CAN controller values. If point of sampling and scan rate (86.7 %, 3-times sampling at all Baud rates) do not meet the demands please contact the technical service of Jenaer Antriebstechnik.

*) Note for ECOVARIO® 114 Dx-Hx-xxx xxx and ECOVARIO® 114 Dx-Ix-xxx xxx (Profinet): The CAN interface is implemented as service interface for ECO Studio only; no object dictionary acc. to CANopen DS402.

Table 6.18: Pin assignment connector X21

Pin	Signal	Description
1	-	n.c.
2	CAN_L	CAN data L
3	CAN_GND	reference potential to CAN data
4	-	n.c.
5	-	n.c.
6	CAN_GND	reference potential to CAN_V+
7	CAN_H	CAN data H
8	-	n.c.
9	CAN_V+	+12 V_{DC} (+/–4 V_{DC}) max. 50 mA

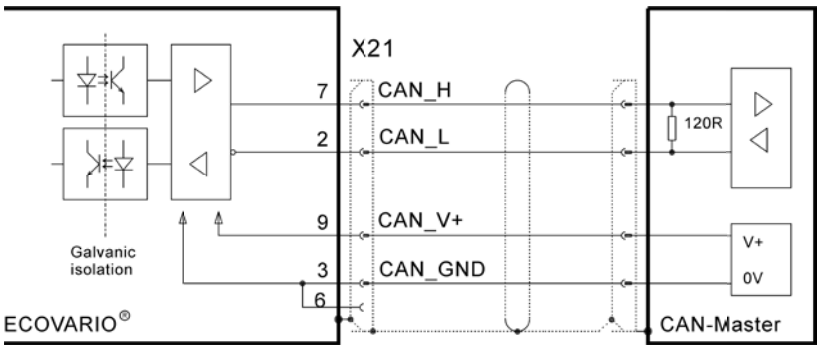

Fig. 6.32: Circuit X21, design with CAN interface

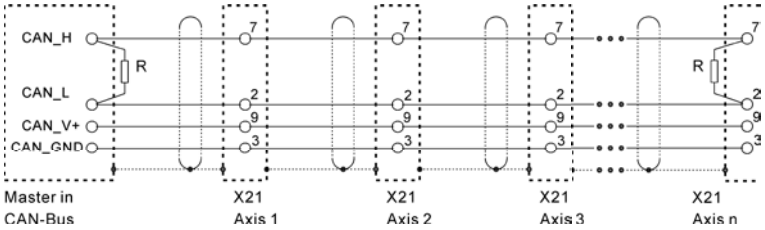

Fig: 6.32: size terminating resistors R acc. to line impedance; normal: R = 120 Ω

6.8 Optional interfaces

ECOVARIO® 114 D is available with the following options:

ECOVARIO® 114 Dx-F x-xxx xxx: CAN + RS485 + PROFIBUS DP-V0
ECOVARIO® 114 Dx-G x-xxx xxx: CAN + RS232 + PROFIBUS DP-V0
ECOVARIO® 114 Dx-L x-xxx xxx: CAN + RS232 + Ethernet interface
ECOVARIO® 114 Dx-P x-xxx xxx: CAN + RS485 + EtherCAT® interface
ECOVARIO® 114 Dx-Q x-xxx xxx: CAN + RS232 + EtherCAT® interface
ECOVARIO® 114 Dx-H x-xxx xxx: CAN* + RS485 + Profinet® interface
ECOVARIO® 114 Dx-I x-xxx xxx: CAN* + RS232*+ Profinet® interface

*) CAN/RS232 as service interface for ECO Studio only; no object dictionary acc. to CANopen DS402.

6.8.2 X22: Designs with PROFIBUS DP-V0 interface

The pin assignment of the design with PROFIBUS DP-V0 is according to the requirements of the directive EN 50170.

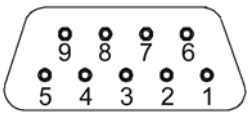

Fig. 6.33: Mating connector X22: 9-pole Sub-D socket; view of the solder or crimp side

Table 6.19: Pin assignment connector X22 on design with PROFIBUS DP-V0 interface

Pin	Signal	Description
1	-	n.c.
2	-	n.c.
3	RxD/TxD+	PB data
4	CNTR-P	PB control
5	PB_GND	PB ground
6	PB_5V	PB 5 V
7	-	n.c.
8	RxD/TxD-	PB /Data
9	-	n.c.

Additionally to the signals RxD/TxD+, RxD/TxD-, PB_GND and PB_5V the optional signal CNTR (RTS, control of the forward direction of the data) is supported. This signal can be used for controlling a repeater or an fibre optic link converter (OLP, Optical Link Plug).

The bus interface of the ECOVARIO® is electrically seperated from the rest of the device. But the reference potentials are interconnected via 1 MΩ and 100 nF. The interface is supplied by the unit, an external supply in not necessary. The shroud of the Sub-D connector is connected to chassis earth (GND).

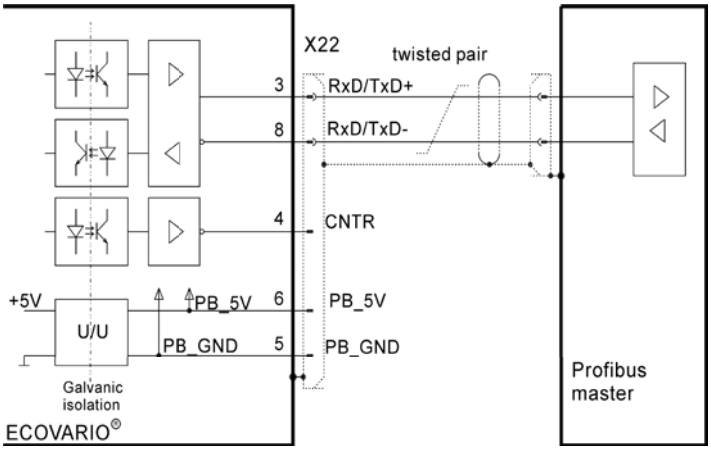

Fig. 6.34: Circuit X22 on design with PROFIBUS DP-V0

All units are connected in a bus structure (line). In one segment up to 32 participants (master or slaves) can be connected. Each segment has an active bus terminating module at the beginning and at the end (cf. Fig. 6.35).

To obtain faultless operation it has to be made sure that both bus terminating modules are continuously supplied. The bus terminating module is commonly realized in the bus connectors to be switched in. If there are more than 32 participants or for enlarging the network repeaters have to be used to connect the bus segments to each other.

Use only cable with a mesh shield. If the unit is mounted it is an advantage if the cable is stripped without interruption and laid on the shield or PE conductor. This measure increases the reliability in ambients with strong interferences.

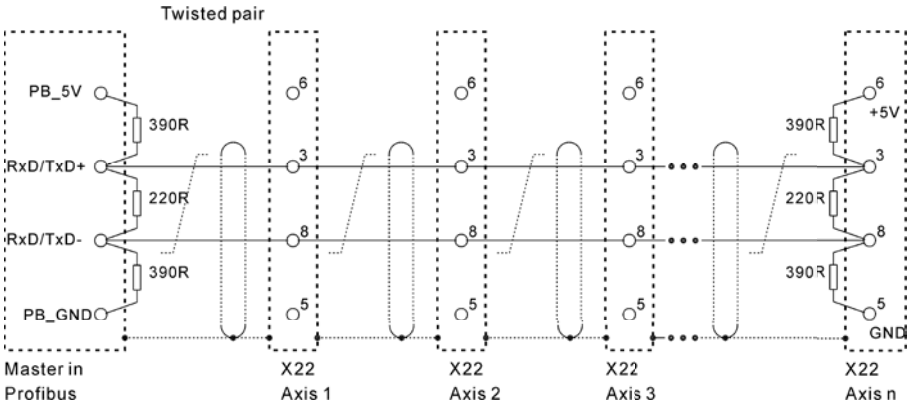

Fig. 6.35: PROFIBUS connection of several ECOVARIO®s

For newly installed PROFIBUS DP-V0 cablings we recommend standardized cable type A with the following characteristics:

Wave resistance:	135 – 165 Ω
Capacitance per unit length:	< 30 pF/m
Loop resistance:	110 Ω/km
Core diametre:	0,64 mm
Core cross section:	> 0,34 mm²

The maximum cable length depends on the transmission rate. E. g. with a transmission rate of 187.5 kBit/s the maximum cable length is 1 200 m, at 12 MBit/s the cable should not be longer than 100 m.

At transmission rates ≥1.5 MBit/s spur lines must be avoided. Common connectors provide the possibility to connect incoming and outgoing cables directly in the connector. Thus spur lines are avoided and the bus connector can be plugged in and off the bus without interrupting the data transmission.

Use only bus connectors suitable for PROFIBUS DP-V0 and the respective baud rate. The connectors at both ends should provide a termination to be switched in. Additionally in each connector should be a longitudinal inductance with 100 nH for each outgoing data conductor. These connectors are available from Siemens for example.

The shield of the PROFIBUS DP-V0 cable may not be used for potential compensation. Machines that are grounded at various spots must have a separate PE conductor the impedance of which is at least 10 times smaller than the one of the cable shields.

6.8.3 X22: Designs with Ethernet interface

As an option, ECOVARIO® can be equipped with an Ethernet interface which can be used for parameterization. The interface supports Fast Ethernet according to IEEE-802.3u (100Base-TX), halfduplex, 100Mbps. Physically, the interface is designed as two standardized RJ45-sockets at the front side of the ECOVARIO®.

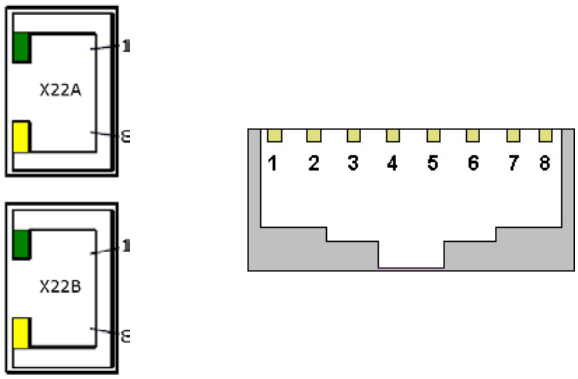

Table 6.20: Pin assignment connector X22A,B on design with Ethernet interface

Pin	Signal	Description
1	RX+	Receive signal +
2	RX-	Receive signal -
3	TX+	Transmit signal +
4	-	n.c.
5	-	n.c.
6	TX-	Transmit signal -
7	-	n.c.
8	-	n.c.

The interfaces X22A and X22B can each be used for the connection to the PC or a server (end of a star-shaped connection) as well as for the connection to further servo amplifiers via a line-shaped connection (uplink, cf. examples below).

Cabling is done via twisted-pair-cables UTP, Cat.5e. Star and line topologies are supported. Not more than 6 ECOVARIO® servo amplifiers should be cabled in line. The cable length between two devices is limited to 100 m.

For using the Ethernet interface the IP address, the subnet mask, the port and, if necessary, a gateway IP address have to be parameterized. The gateway IP address is only necessary if a communication to external network is intended to be set up.

The interfaces X22A and X22B are each equipped with the following display elements:

- green LED displays „Link Activity“
- orange LED displays „Collision Detection“.

An ECOVARIO® which is operated with the Ethernet interface automatically selects the interface used for message transfer. If a CAN bus connection is available, all messages which the ECOVARIO® intends to transmit, e.g. PDOs, emergencies or the boot-up message are sent on the CAN bus. If no CAN bus voltage can be detected it is assumed that a pure Ethernet application is set up and all messages are sent via Ethernet (if no Ethernet cable is plugged, the messages are lost!). CAN bus has the highest priority, i.e. the messages are transmitted via CAN bus as soon as the CAN connector has been plugged. Ethernet messages are not sent until 5s after power-up, because the hardware requires this time for configuration. During this time up to 8 (via DPM) or up to 32 (via CAN-Bus) received messages are stored temporarily.

There are three ways to implement the operation with Ethernet interface:

- as a CAN/Ethernet bridge, where one ECOVARIO® with Ethernet interface serves as a gateway
- as a pure Ethernet application, where all ECOVARIOs® are connected to each other by Ethernet interfaces
- as a version with parallel bus operation.

The three ways are described in the following.

Gateway operation
In the most common application an ECOVARIO® with Ethernet interface serves as a bus coupler between Ethernet and an existent CAN bus system. Fig. 6.36 shows the resulting topology. In any case the CANopen protocol is used which is „tunneled“ in UDP packages for the transport via Ethernet. The original CAN data is extracted from these packages and is lead to the CAN bus. All bus nodes (also the ECOVARIO® with Ethernet interface) can receive them. In the other direction all CAN messages received via the bus are packed into UDP packages and sent via the Ethernet.

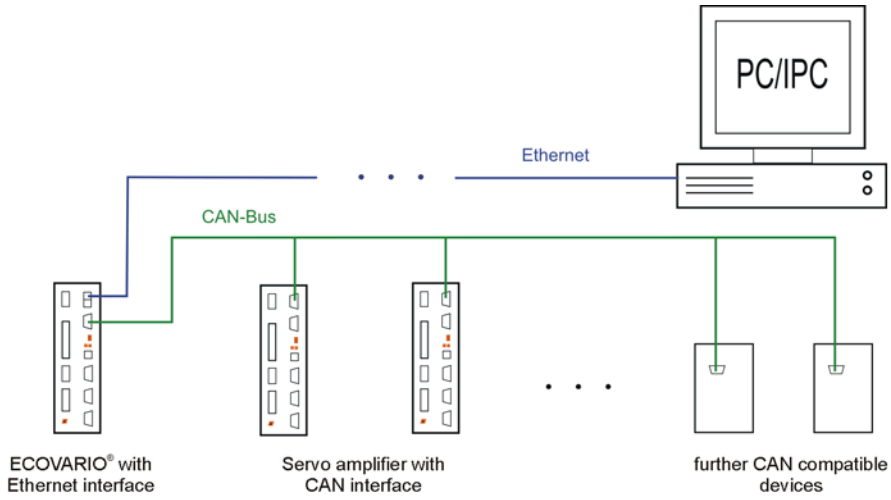

Fig. 6.36: Gateway operation of the ECOVARIO®

The Ethernet function supports full SDO transfer with one or more client applications on PC/IPC side. Therefore, the SDO answers received on the CAN bus are switched through to the respective service (automatic assignment of IP address and port). All other received messages as PDOs and emergencies etc. are sent to an address which has to be defined in the configuration object. For example, this could be the IP address of the PC/IPC or the IP broadcast address (255.255.255.255). The port is freely selectable, however should be adjusted to a respective application on the PC (e.g. for logging).

Ethernet operation

For this version CAN bus wiring is not required at all (cf. Fig. 6.37). The communication is handled exclusively via Ethernet. All CANopen messages and services (PDO, Emergency, NMT etc.) are managed.

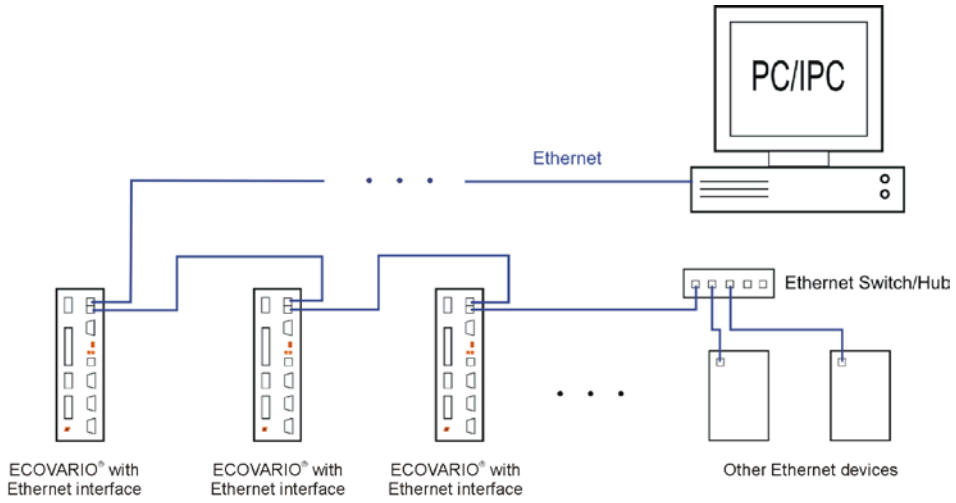

Fig. 6.37: Ethernet operation of ECOVARIO® without using the CAN bus

Redundant operation

The special feature of this version (Fig. 6.38) is that e.g. service data (via SDO) can be exchanged via Ethernet while process communication is done via the CAN bus. The SDO transfer with the PC/IPC does not reach the CAN bus which is not disturbed (e.g. synchronous motion). In order to change the operation mode the gateway mode has to be deactivated in each device (object 0x2FB2, sub index 12), because otherwise the devices would send the messages to each other continuously. Process data communication is decoupled completely from the Ethernet in this case. All other CANopen messages and services (PDO, Emergency, NMT etc.) are not switched through from the CAN bus to the Ethernet side (and vice versa).

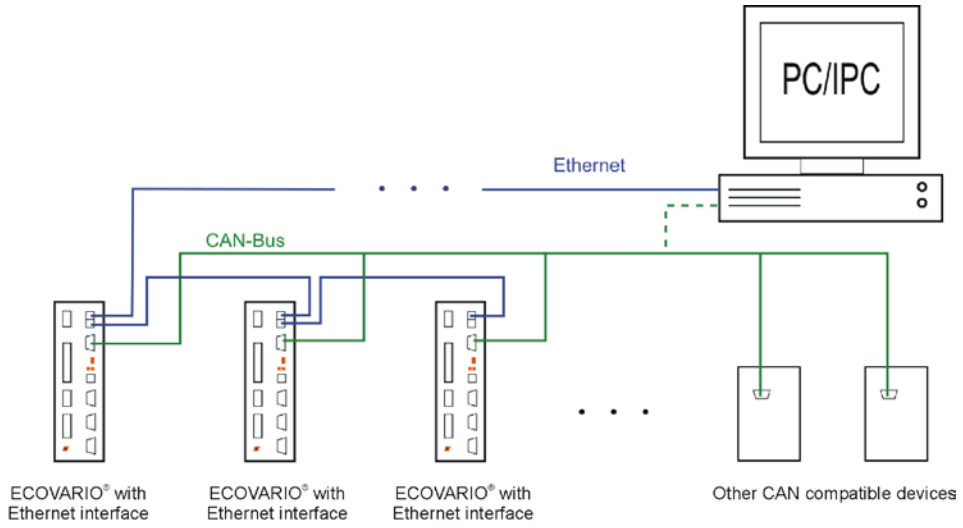

Fig. 6.38: Redundant operation Ethernet/CAN with ECOVARIO®

6.8.4 X22: Designs with EtherCAT® interface

As an option, ECOVARIO® can be equipped with an EtherCAT® interface which can be used for setpoint setting and parameterization. The interface supports the protocol of the EtherCAT® Technology Group and allows for Fast Ethernet according to IEEE-802.3u (100Base-TX), fullduplex, 100Mbps. Physically, the interface is designed as two standardized RJ45-sockets at the front side of the ECOVARIO®. Pin assignment is the same as for the standard Ethernet interface (c.f. Chap. 6.8.3).

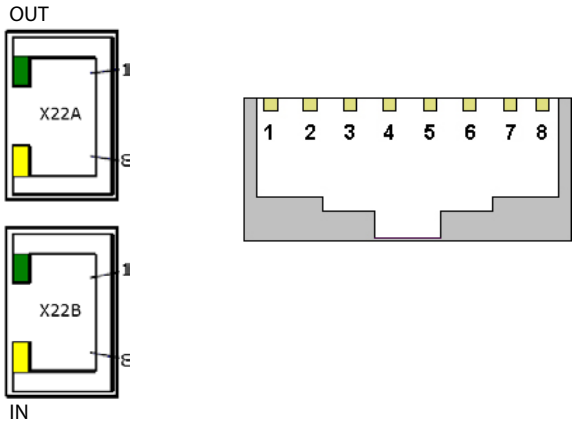

Table 6.21: Pin assignment connector X22A,B on design with EtherCAT interface

Pin	Signal	Description
1	RX+	Receive signal +
2	RX-	Receive signal -
3	TX+	Transmit signal +
4	-	n.c.
5	-	n.c.
6	TX-	Transmit signal -
7	-	n.c.
8	-	n.c.

The interface X22B is the EtherCAT® „IN“ port and is used for the connection to the PC or a server (end of a star-shaped connection).

The interface X22A is the EtherCAT® „OUT“ port and is intended for the connection to further servo amplifiers via a line-shaped connection (uplink, cf. examples below).

Cabling is done via twisted-pair-cables UTP, Cat.5e. Tree and line topologies are supported. Star topologies are possible as well. The cable length between two devices is limited to 100 m.

For process control and visualization of EtherCAT® devices the operation with the PC software „TwinCAT“ (manufacturer: Beckhoff GmbH) is proposed. For configuration instructions and an application example please refer to Application Note 26.

The objects which are required for the configuration of the EtherCAT® communication are described in the manual „Object Dictionary ECOVARIO, ECOSTEP, ECOMPACT, chapter 5.2.29.

The interfaces X22A and X22B are each equipped with the following display elements:

- green LED displays „Link / Activity“
- orange LED displays „Transmission in fullduplex mode“.

The green „RUN“ LED is located in the housing of the ECOVARIO and can be seen through the air slots on the upper side of the housing. The LED has the following functions:

- LED off: EtherCAT® State Init
- LED flashes (5 Hz): EtherCAT® State Pre-Operational
- LED flashes (200ms on/1s off): EtherCAT® State Safe Operational
- LED on: EtherCAT® State Operational

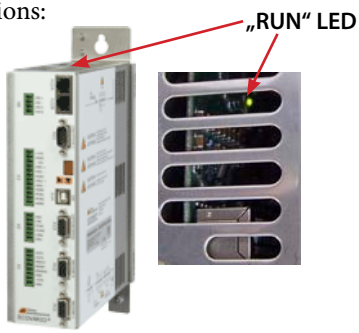

There are two ways to implement the operation with EtherCAT® interface:

- as a pure EtherCAT® application, where all ECOVARIOs® are connected to each other by EtherCAT® interfaces
- as a version with parallel bus operation EtherCAT® / CAN.

The two ways are described in the following.

Pure EtherCAT® operation
For this version no CAN bus wiring is required (cf. Fig. 6.39). The communication is handled exclusively via EtherCAT®. All CANopen messages and services (PDO, Emergency, NMT etc.) are managed.

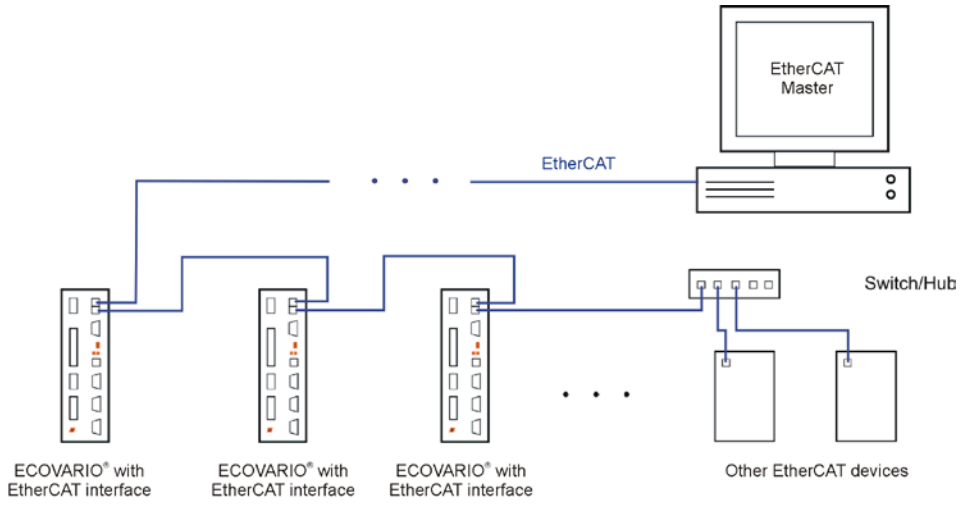

Fig. 6.39: EtherCAT® operation of ECOVARIO® without using the CAN bus

Parallel operation
In principle, CAN and EtherCAT® can be operated in parallel (cf. Fig. 6.40) where the CAN bus is used for parameterization while EtherCAT® is used for the synchronous (interpolated) operation. As soon as the ECOVARIO® has been configurated successfully by the EtherCAT® master and has been set to preoperational state via EtherCAT®, the NMT telegrams via CAN are ignored. PDOs assigned to the EtherCAT® bus are no longer sent nor received via CAN. Interpolated operation via CAN is not possible in this case. Emergency telegrams are sent via both bus systems. SDO traffic is functional without limitations via all interfaces.

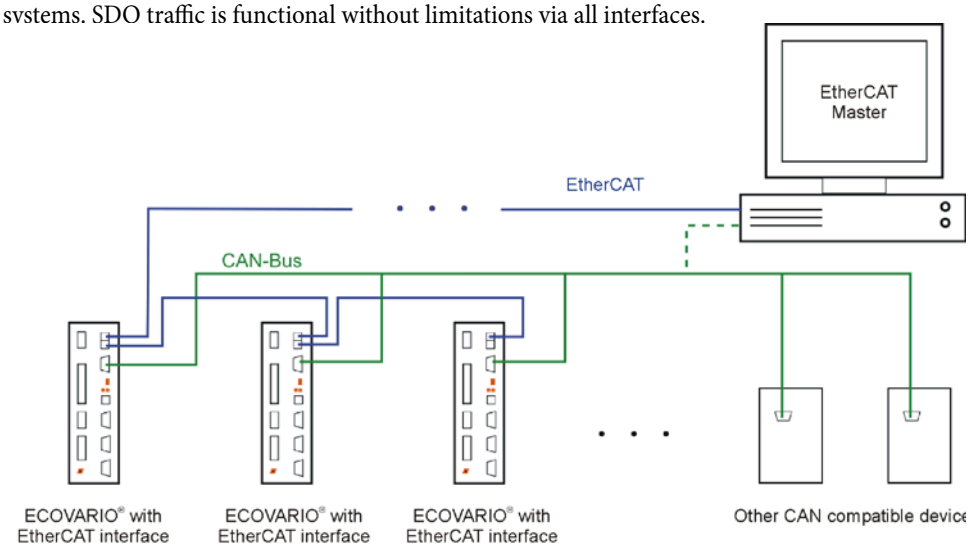

Fig. 6.40: Parallel operation EtherCAT/CAN with ECOVARIO®

6.8.5 X22: Designs with Profinet® interface

As an option, ECOVARIO® can be equipped with a Profinet® interface which can be used for setpoint setting and parameterization via a respective PLC.

ECOVARIO 114D supports the following ProfiDrive application classes:

- 1 (standard drive with velocity control)
- 3 (drive with one-axis positioning control)
- 4 (servo drive with clock synchronous velocity and position control with central motion control).

ECOVARIO 114 D supports IRT (Realtime Class C) and can work in interpolation cycles of 1 ms, 2 ms or 4 ms.

The interface allows for Fast Ethernet according to IEEE-802.3u (100Base-TX), fullduplex, 100Mbps. Physically, the interface is designed as two standardized RJ45-sockets at the front side of the ECOVARIO®. Pin assignment is the same as for the standard Ethernet interface (c.f. Chap. 6.8.3). The netwotk controller used for the Profinet interface also provides an Ethernet stack. By means of the Ethernet stack it is possible to support the manufacturer specific UDP protocol for Ethernet communication. Thus, a communication e.g. with ECO Studio can be established in parallel to the ProfiNet traffic.

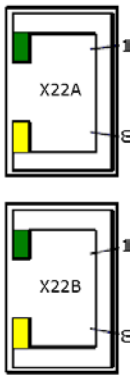

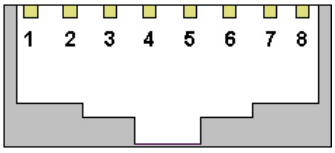

Table 6.22: Pin assignment connector X22A,B on design with Profinet interface

Pin	Signal	Description
1	RX+	Receive signal +
2	RX-	Receive signal -
3	TX+	Transmit signal +
4	-	n.c.
5	-	n.c.
6	TX-	Transmit signal -
7	-	n.c.
8	-	n.c.

The interfaces X22A and X22B can each be used for the connection to the PC or a server (end of a star-shaped connection) as well as for the connection to further servo amplifiers via a line-shaped connection (uplink, cf. examples below).

Cabling is done via twisted-pair-cables UTP, Cat.5(e). Tree and line topologies are supported. Star topologies are possible as well. The cable length between two devices is limited to 100 m.

The interfaces X22A and X22B are each equipped with the following display elements:

- green LED displays „Link / Activity“
- orange LED displays „Collision Detection“.

Three more diagnosis LEDs are located in the housing of the ECOVARIO and can be seen through the air slots on the upper side of the housing.

The LEDs have the following functions:

System LED:

- yellow: NetX system runs without user application
- green: User application is running
- off : Option card has no NetX system or no supply voltage.

Real Time Ethernet Status LED 1

- red: Bus error (cable not connected / IP settings not configured)
- off : No error or no supply voltage.

Real Time Ethernet Status LED 2

- red: System error
- flashes red: Under configuration or protocol stack expects configuration
- off : No error or no supply voltage.

For process control and visualization of ECOVARIO® in the Profinet® network a ProfiDrive compatible controller can be used. For configuration instructions and an application example with the PLC S7-1500 (manufacturer: Siemens) please refer to Application Note 33 (under preparation).

There are two ways to implement the operation with Profinet® interface:

- as a pure Profinet® application
- communication with ECO Studio in parallel to the Profinet® bus operation.

The two ways are described in the following.

Pure Profinet® operation
The communication is handled exclusively via Profinet® (cf. Fig. 6.42). All CANopen messages and services (PDO, Emergency, NMT etc.) are managed. For the ECOVARIOs e.g. a line-shaped or a star-shaped connection via an IRT switch can be provisioned.

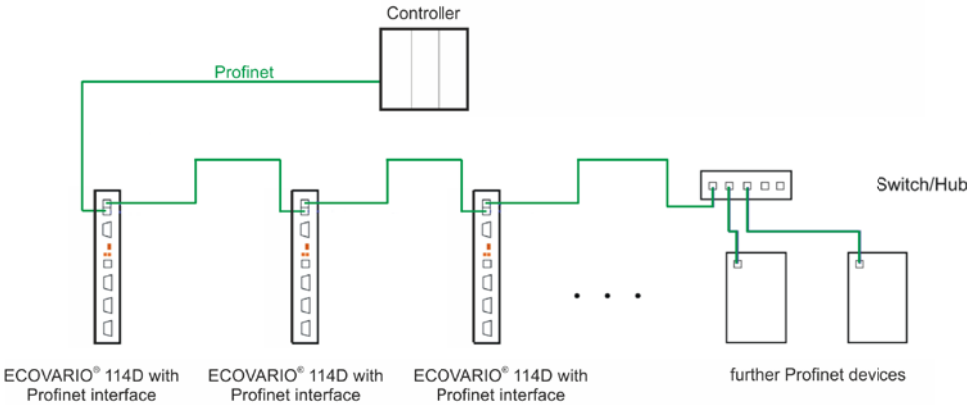

Fig. 6.42: Example: Profinet® operation of ECOVARIO® 114D with line-shaped connection

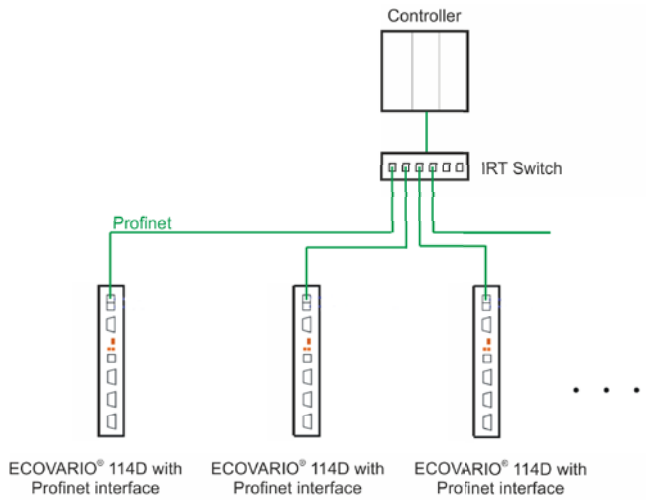

Note: IRT switch required for IRT operation only (AK4), in other cases a normal switch is sufficient

Fig. 6.43: Example: Profinet® operation of the ECOVARIO® 114D with star-shaped connection via IRT switch

Communication with ECO Studio connection in parallel to Profinet traffic
The following settings have to be made in the IP configuration to communicate via the Ethernet interface and ECO Studio:

- IP of the ECOVARIO and IP of the ECO Studio PC have to be in the same subnet
- The gateway address of the ECOVARIO has to be the IP adress of the ECO Studio PC.

The settings can be made via object 0x2FB2 or via Step 7.

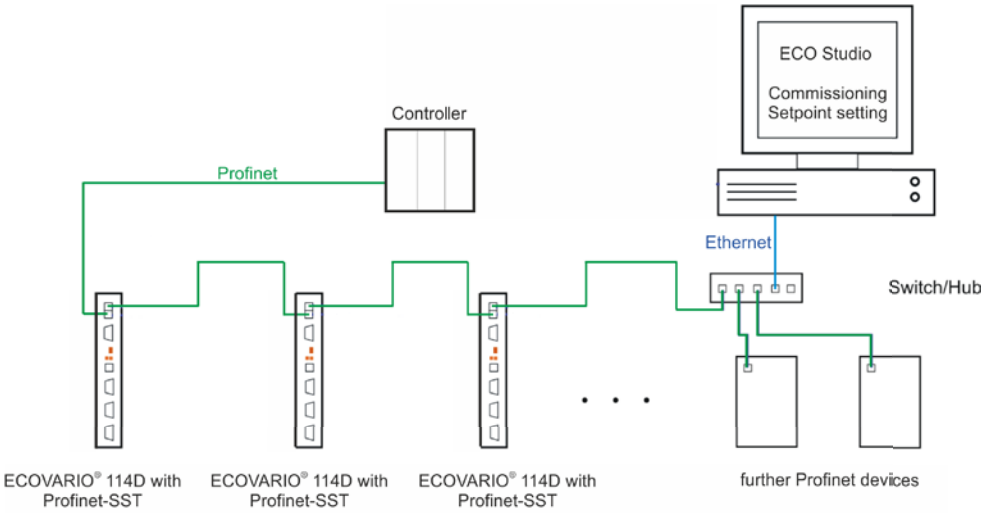

Fig. 6.44: Communication of ECO Studio in parallel to the Profinet traffic

7 Commissioning

7.1 Notes before commissioning

Only qualified personnel with a broad knowlege of the fields of electrical engineering, automation and drives are allowed to commission the servo amplifier ECOVARIO® 114 D. If required, Jenaer Antriebstechnik GmbH offers trainings.

The manufacturer of the machine must generate a hazard analysis for the machine and take appropriate measures to ensure that unforeseen movements cannot cause injury or damage to any person or property.

Check the wiring for completeness, short circuit and ground fault.

WARNING / *AVERTISSEMENT*	**The protective earth conductor has to be properly applied before applying a voltage.** If the protective earth conductor is not connected, in case of a failure e.g. the housing of the servo amplifier can be at hazardous voltage level.	***Un raccordement à la terre réglementaire doit obligatoirement être raccordé avant la mise sous tension de l'appareil.*** *Si cette mise à la terre n'est pas raccordée, le boitier de l'amplificateur de servomoteur peut, en cas de problèmes, mener de dangereuses tensions.*
WARNING / *AVERTISSEMENT*	**Never plug or pull electrical connections while they are live! There is a risk of arcing. Arcs can cause injury and damage contacts.** During operation logic and power connectors are live.	***Ne pas effectuer de débranchements sous tension. Il y a danger d'arc électrique qui peut blesser des personnes et endommager des contacts.*** *Pendant l'utilisation les conducteurs de pilotage et de puissance conduisent des tensions dangereuses.*
WARNING / *AVERTISSEMENT*	**Acute danger of life or risk of injury due to high voltages! All live parts must be protected safely against touching.** Even up to six minutes after disonnection from the supply capacitors can still have dangerous voltages present. To be sure measure the DC link circuit and wait till it has fallen below 40 V.	***Danger de mort ou danger de blessures par des tensions élevées! Ne touchez pas de pièces de l'amplificateur de servomoteurs qui peuvent être potentiellement conducteur de tension (par exemple des contacts).*** *Attendez au moins 6 minutes. Les condensateurs peuvent rester chargés aussi longtemps de tension dangereuse. Mesurez par sécurité les tensions entre circuits jusqu'à qu'elles soient inférieurs à 40V.*

If there are several axes in one machine commission one axis after the other. The axes already commisioned should be switched off.

For commissioning of the safety function STO observe chap. 6.4.1.

CAUTION / *ATTENTION*	**Hot surfaces may cause burns to the skin.** As the housing of the ECOVARIO serves also as heat sink during operation the surface temperature may rise to more than 70°C. Before touching these parts after switching off the unit wait until the temperature has fallen down to 40 °C.	***Des surfaces chaudes peuvent entrainer des brulures.*** *Le boiter de l'ECOVARIO sert également de radiateur, ceci entraine qu'il peut atteindre des températures de plus de 70°C pendant l'utilisation. Avant de toucher ces pièces, vous devez attendre après l'arrêt jusqu'à ce que la température de surface tombe à environ 40 ° C.*

7.2 Control and display elements

At the front side of the ECOVARIO® 114 D one 7 segment LED display and two keys are located.

The display shows state and error messages. If the state or error message has more than one digit the digits are shown one after another in intervals of 0.5 s. For further information cf. chapter 7.3.1.

The following settings can be made with the keys:

- Unit ID (Node-ID) in a CAN, USB, RS232, RS485 or PROFIBUS network
- Baud rate for the CAN network
- Display of the Ethernet IP Address or of the EtherCAT® station address
- Restarting the bootloader and the loadware

For detailed instructions on the use of the keys refer to chapter 7.3.3.

7.3 Work schedule commissioning

1. Check installation
The servo amplifier is disconnected from the supply. Check the wiring for completeness, short circuits and ground faults (according to connection diagram in Fig. 6.2.1).

2. Zero enable
Connect the ENABLE input of the respective axis to 0 V (connector X1A (axis 1) or X1B (axis 2)).

3. Switch on 24 V logic supply
Apply the 24 V control voltage at the connector X1A between the pins GND and +24 V; after an initializing phase of about 3 s the LED display shows the operation mode of the servo amplifier.

4. Rectify eventual errors
If the display shows an error, the error has to be rectified before commissioning (cf. chapter 7.3.2).

5. Start setup software
Connect a PC to the PC interface (X13) of the ECOVARIO® 114 D (or via CAN dongle to the interface X21) and start the commissioning and operation program ECO Studio. Here, establish the logic connection between PC and ECOVARIO® 114 D.
Note: For each axis a separate ECO Studio session has to be started.

6. Device configuration and mechanical configuration

NOTICE / *PRUDENCE*	**Incorrect parameter settings can cause damage or destruction of machine parts.** Device configuration and mechanical configuration must be adjusted to each specific case.	***De mauvais paramétrage peuvent endommager ou détruire des paries de la machine.*** *Les appareils et la configuration mécanique doivent être individuellement adaptés à chaque cas.*

With the help of the ECO Studio device configuration wizard and of the mechanical configuration wizard carry out the basic settings for the operation of ECOVARIO®. A detailed description of software commissioning can be found in the „ECO Studio Operation Manual ECOVARIO®, ECOSTEP® and ECOMPACT®“ and in the ECO Studio help system.
Before switching on the power supply the following items 7 to 10 have to be observed.

7. Check safety equipment

DANGER	**High voltages and unintentional movements of motors, tools or axes may lead to death or serious injuries.** Before switching on the voltage it is vital to check if all safety equipment that protects from touching live parts and from the consequences of indeliberate movements functions properly.	***Des tensions élevées et des mouvements involontaires du moteur, des outils ou des déplacements d'axes entraines des dangers de mort ou de blessures.*** *Avant la mise sous tension de la partie puissance, il s'assurer que les parties pouvant conduire du courant et les conséquences de de mouvements involontaires soient sécurisées et fonctionnent correctement.*

8. Zero demand values
Before switching on the power supply the analog and digital demand values for position and speed should be zeroed.

9. Switch on power supply
The power supply should only be switched on with the on/off switches of a contactor circuit.

10. ENABLE
0,5 s after switching on the power supply, the enable signal of the respective axis can be changed to „high“ (24 V level at input X1A: Enable1 or X1B: Enable2). If the motor vibrates or hums the value of the p-gain should be reduced (ECO Studio: in the navigation area select the „Controller“ entry and then the „Velocity Controller“ tab).

11. Parameter optimization, further programming

NOTICE / *PRUDENCE*	**Incorrect parameter settings can cause damage or destruction of machine parts.** The controller parameters are pre-set by the manufacturer. However, they must be checked and if necessary adjusted to the specific application. A detailed description of how to set the velocity controller and position controller parameters can be found in the ECO Studio help system.	***De mauvais paramétrage peuvent endommager ou détruire des paries de la machine.*** *Les paramètres du régulateur sont préréglés en usine, cependant, doivent être vérifiées et adaptées à chaque cas spécifique. Une description détaillée de la configuration des paramètres du régulateur de vitesse et de position, est donnée le système d'aide ECO-Studio.*

7.3.1 State display

No parameters available
Display shows Uc. If no communication or control parameters are available or if these are invalid, the unit is in the state „not configurated“. After setting or storing the unit must be restarted.

Operation
Display shows 0. Inactive state (power stage switched off at both axes) display „0“, dot flashes.
Display shows 0. Active state (power stage switched on at axis 1; axis 2 switched off), dot flashes
Display shows 0. Active state (power stage switched on at axis 2; axis 1 switched off), dot flashes
Display shows 8. Active state (power stage switched on at both axes) display „8“, dot flashes.

Blocking
Display shows . positive limit switch axis 1 reached
Display shows . negative limit switch axis 1 reached
Display shows . both limit switches axis 1 reached
Display shows . positive limit switch axis 2 reached
Display shows . negative limit switch axis 2 reached
Display shows . both limit switches axis 2 reached
Blockings of both axes are displayed as a combination of the displays shown above.

Save parameters
During saving parameters in the EEPROM the display shows a „P“. Afterwards the prior value is displayed.

Error display
If an error is detected, this is displayed. It is always the last error, that is displayed. If the error on the display is cleared (if possible) the next error on the list is displayed. For the groups D and E the error code on the display is preceded by an axis code („1.“ or „2.“).

Bootloader mode
The „b.“ on the display indicates that the device is in the bootloader mode. The point indicates that the bootloader is ready for operation.

Profinet slave assignment test
Triggered by the Profinet master the slave units ECOVARIO 114 D can display a flashing „8“ for text purposes.

7.3.2 Error messages

If the loadware recognizes an error, it is displayed. In bootloader mode the error display can be interrupted by pressing a key, afterwards errors can be shown with the display of the error memory (cf. chap. 7.3.3 „Key operation“). It is always the last error that is displayed.

Note: For the groups D and E the error code on the display is preceded by an axis code („1.“ or „2.“). In ECO Studio the error messages of groups D and E are related to the axis which is connected to the individual ECO Studio session.

Table 7.1: Error messages

Code	Error	Countermeasure
Group A General errors		
A00	Incorrect checksum of a bootloader section or overall checksum	Repeat action, if the error reoccurs, send in device to manufacturer
A01	Error during deleting a flash section	Repeat action, if the error reoccurs, send in device to manufacturer
A03	Error during programming the flash memory	Repeat action, if the error reoccurs, send in device to manufacturer
A04	Error during adressing the flash memory	Repeat action, if the error reoccurs, send in device to manufacturer
A10	Error during reading/writing the EEPROM	If the error reoccurs send in the device to manufacturer
A11	Incorrect checksum of an EEPROM section	Communication and/or application parameters have not (yet) been stored. This behaviour is normal with new devices and has been implemented for signalling this to the user.
A20	Incorrect calibration data	Send in device to manufacturer
A21	Watchdog error of standard loadware	If the error reoccurs send in the device to manufacturer
A24	Firmware/Loadware does not fit to device	Load appropriate firmware/loadware. First letter of the file name has to be „D“. If in doubt, contact service hotline of Jenaer Antriebstechnik GmbH.
A25	FPGA could not be started	
A26	Device could not be started	Contact service hotline of Jenaer Antriebstechnik GmbH
Group B Bus errors		
B00	CAN Nodeguarding error. No messages are sent. Synchronisation window in interpolated mode exceeded.	Check bus connection and device function, check supply voltage of the CAN bus
B01	CAN bus parameters not available, incorrect saving of parameters. No messages are sent	Enter parameters again, check node ID and Baud rate
Group D Device and axis errors: The error code on the display is preceded by an axis code („1.“ or „2.“)		
D00	Restart lock blocks switch on	Check function of the restart lock
D01	No external enable	Check ENABLE signal
D02	Heat sink temperature >85 °C	Switch off unit and let it cool down. Check whether the device is mounted in the correct mounting position. Make sure that no heat accumulation can occur in the cabinet.
D03	Device temperature >60 °C	
D04	Temperature error motor	Let motor cool down. Check temperature sensor connectors.
D06	Negative limit reached	Reset if an error message is raised
D07	Positive limit reached	Reset if an error message is raised
D10	Short circuit of motor phases or ground fault of the power stage resp.	Check motor and supply cables. Check whether the shield wires are connected correctly.
D11	Overvoltage in the supply cables	
D12	Exceeding $i^2 x t$ limitation of device	Check parameters and operating conditions. Check if axis is freely movable.
D13	Exceeding $i^2 x t$ limitation of motor	

Code	Error	Countermeasure
D20	External 24 V supply at X1 has fallen below 17 V	Check 24 V power supply. Are there disturbances on the supply line? Check output power specification of power supply whether it is dimensioned sufficiently.
D21	DC link voltage too high, short circuit of ballast circuit	Check DC link and ballast circuit. Is the ballast resistor connected correctly? Check supply voltage (might be too high).
D22	DC link voltage too low	Check power supply and connections. Check output power specification of power supply whether it is dimensioned sufficiently.
D23	Overload ballast circuit	Check dimensioning of ballast resistor. Is the ballast resistor connected correctly? Error cause might be a defective ballast resistor (high-resistance).
D25	Short circuit or overload of the digital outputs or the brake control resp.	Check the digital outputs and brake output. Check whether the shield wire of the motor cable is connected correctly.
D26	Internal +5 V voltage missing	If error reoccurs send in device to manufacturer
D27	Internal +15 V voltage missing	If error reoccurs send in device to manufacturer
D30	Following error too high	Check axis parameters and operating conditions. Check whether the axis is freely movable. Check whether the (second) position measuring system still counts correctly.
D31	Commutation not found	Check if axis is freely movable. Check whether the motor phases are connected correctly, whether the encoder counts and whether the commutation settings are correctly.
D32	Internal software reset	If error reoccurs send in device to manufacturer
D33	Error controller watchdog	If error reoccurs send in device to manufacturer
D34	Error supervision of external position measuring system	Check adjustment of the machine. If error reoccurs send in device to manufacturer.
D35	Gantry system only: Error of an axis in the gantry interconnection	
Gruppe E	Encoder errors: The error code on the display is preceded by an axis code („1." or „2.")	
E00	- Antivalence error of 1st incremental encoder of the axis or - No encoder has been selected, however the power stage is switched on	Check encoder and supply cables for wire breakage. If no encoder is configurated, select encoder. Check whether the correct encoder port has been selected. In case of externally powered encoders check supply voltage.
E01	Capture error of 1st incremental encoder of the axis	Check whether the monitoring is set correctly. Error reasons might also be disturbances on the lines or a defective encoder.
E02	Interpolation error SINCOS encoder (circle monitoring)	Check encoder and supply cables. Error reason might be strong electromagnetic interferences.
E03	Too high speed of encoder or cannot be read	Check parameters (limit speed of the motor). Error reason might be contamination or damage of the measuring system
E10	Signal error absolute value encoder	Check encoder and supply cables for wire breakage. Check whether the correct encoder port has been selected. In case of externally powered encoders check supply voltage.
E14	Selected encoder type is wrong or not supported	Check configuration, enter appropriate encoder type
E17	Invalid user data or motor and servo amplifier do not fit	Error occurs upon initial commissioning of a new encoder because no user data has been stored yet in the encoder EEPROM. Writing to the object 0x607C „home_offset"removes the error cause. User data is only stored in JAT motors with multiturn absolute value encoders.
E21	Incorrect multiturn value	Error cause is a contamination or a defect of the revolution counter of the multiturn absolute value encoder.
E23	Quadrant correction error of SINCOS encoder	Check encoder and supply cables for wire breakage. If no encoder is configured, select encoder. Check whether the correct encoder port has been selected. In case of externally powered encoders check supply voltage.

7.3.3 Key operation

In ECOVARIO 114 D communication settings of the device ID and the CAN baud rate can be made with the keys on the front of the device. Furthermore, Ethernet IP or EtherCAT® addresses can be retrieved.

Functions of the keys:
Key S1 ▶: select, menu navigation, count up display values
Key S2 ▼: enter, select menu option, accept values

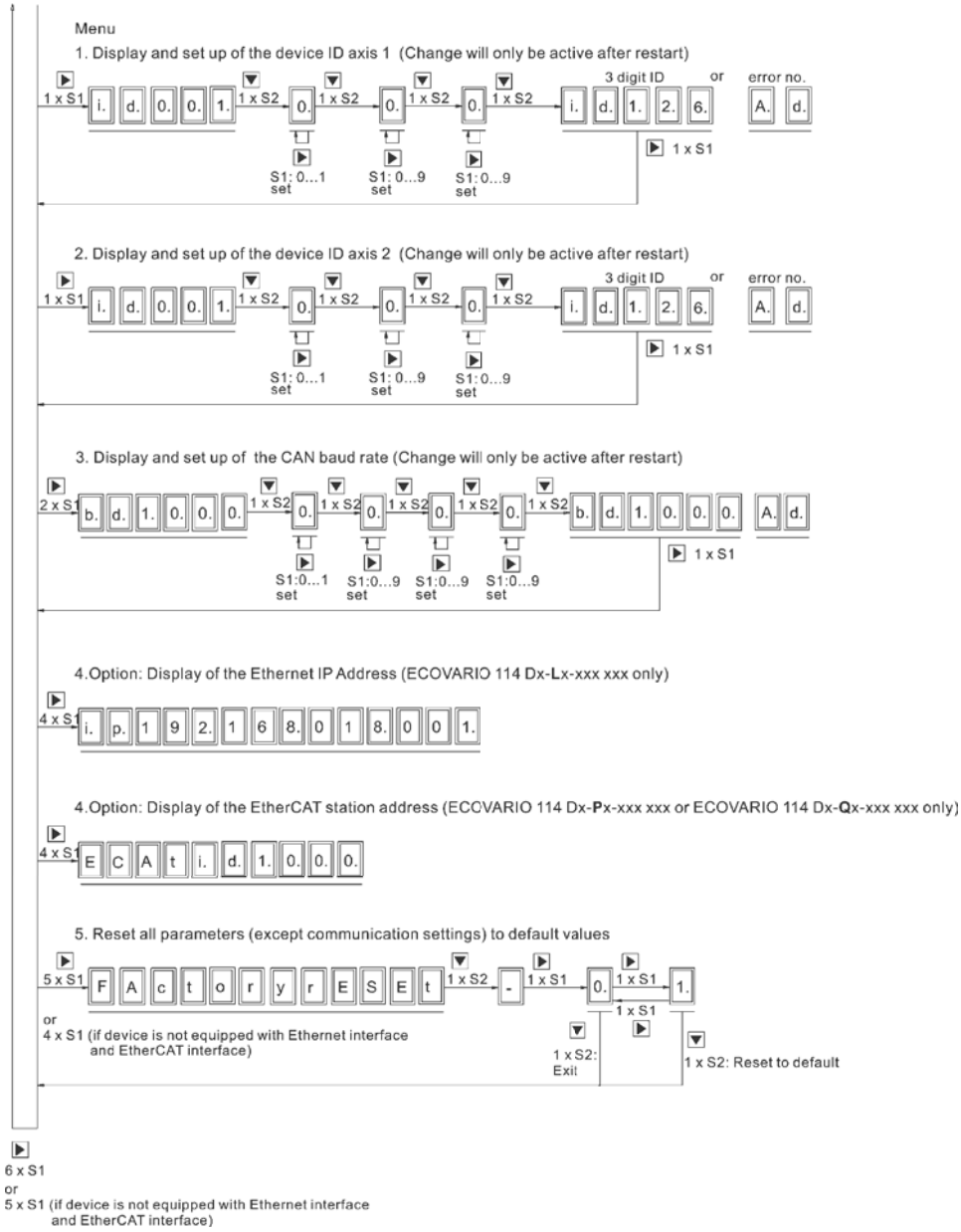

Fig. 7.1: Work schedule key operation

7.3.4 Bootloader mode

The bootloader mode can be selected in three different ways:

- ➲ press both keys during switching on the 24 V control voltage
- ➲ if after switching on the 24 V control voltage an error is recognized
- ➲ by starting the bootloader mode with the commissioning tool from the PC

The „b.“ on the display indicates that the device is in the bootloader mode. The point indicates that the bootloader is ready for operation. In the bootloader mode only error messages of group A are displayed. During saving data in the EEPROM the display shows a „P“. Afterwards the prior value is displayed.

8 Parameter setting

By setting the parameter the ECOVARIO® 114 D is adjusted to the application. The parameters are set in the PC. The user interface ECO Studio is menu-driven and easy to handle.
There are several interfaces to connect the PC to the ECOVARIO®:

- CAN interface
- RS232 interface (optional)
- Ethernet (optional)

8.1 User interface ECO Studio

How to work with the user interface ECO Studio is described in the ECO Studio online documentation. Further information on programming the ECOVARIO® can be found in the manual „Object Dictionary ECOVARIO® and ECOSTEP®“.

9 Accessories

Table 9.1: Overview of ECOVARIO® 114 D original accessories

Order key	Description
Complementary parts	
DDZ10	Shield set with 1 shield plate, 5 cable ties and 4 shield clamps
DDK10	Mating connector set
DDK21	Encodersplitter: 1 x absolute value encoder (15-pole D-sub) + 1 x incremental encoder (9-pole D-sub)
DDK22	Encoder splitter: 2 x incremental encoder (9-pole D-sub)
Software tools and documentation	
ECO2CD	CD with ECO software tools and documentation
Power supplies	
SV24	1 phase power supply 24 V_{DC} /5A
SV24/60	1-phase power supply 24 V_{DC} /2A, 60 V_{DC} /5A
SV60	1-phase power supply 60 V_{DC} /5A
Cables	
INK65-491-525-xxx	Encoder cable for motors with incremental or SINCOS encoder
ABS65-300-525-xxx	Encoder cable for motors with BiSS® encoder
MOT43-132-721-xxx	Motor cable extension for motors 23S without brake
MOT34-132-722-xxx	Motor/brake cable extension for motors 23S with brake

9.1 Supplementary parts

9.1.1 Shield set

The shield set DDZ10 consists of:

- 1 shield plate
- 4 shield clamps, 8 mm
- 5 cable ties

Because of EMC reasons, mounting the lower shield plate is generally required.

For mounting a shield plate proceed as follows:

1. On the respective side of the servo amplifier loosen the screws (Pos. 1) and screw them approx. 2 mm out.
2. Shift the shield plate with the cutout (Pos. 2) under the screw heads (Pos. 1) and into the studs on the side of the servo amplifer (Pos.3).
3. Tighten the screws (Pos. 1) again.

The fixing of the cables can be achieved by cable ties and shield clamps.

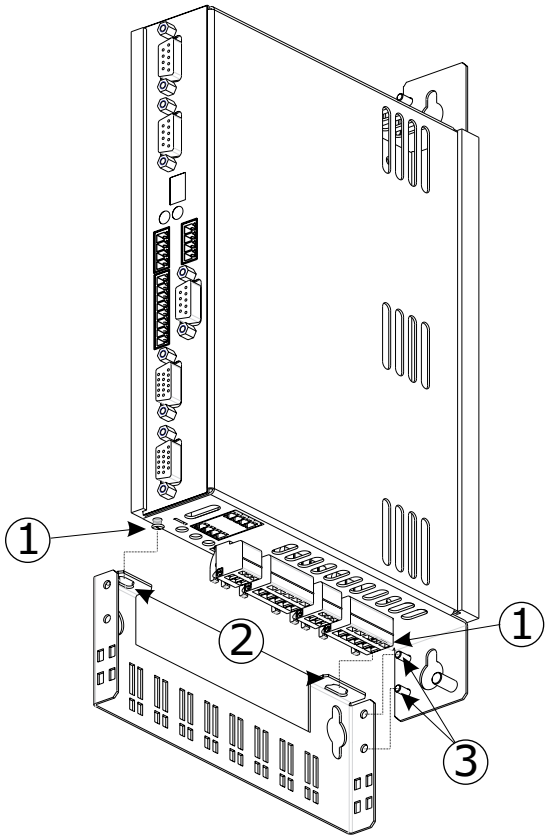

Fig. 9. 1: Mounting of the shield plate (example: lower shield plate)

9.1.2 Mating connector set ECOVARIO® 114 D

A mating connetor set for all interfaces of the ECOVARO® is available. All mating connectors are clearly labelled and designed in a way that there is no danger of mixing them up.

Table 9.2: Composition of ECOVARIO® 114 D mating connector set DDK10

Connector	Function	Mating connector designation, Phoenix ID No.
X1A	24 V/digital inputs and outputs axis 1	FMC 1,5/8-ST-3,81 2CNBD2:-ASO, No. 17 03 06 4
X1B	Digital inputs and outputs axis 2	FMC 1,5/4-ST-3,81 CN3BD2:-BSO, No. 17 03 06 5
X2A, X2B	Digital inputs	FMC 1,5/4-ST-3,81 2CNBD2:-X2SO, No. 17 03 06 6
X4IN	DC link in	FKC 2,5 HC/3-ST-5, 08BDS:-PE, No. 17 03 06 8
X4OUT	DC link out	FKIC 2,5 HC/3-ST-5, 08BDS:PE-L, No. 17 03 07 0
X5A, X5B	Motor connection	ZEC1,5/5-ST-5,0 C2,5 R1,5 5BDNZ5, No 17 55 38 9
X7A, X7B	Motor brake	ZEC1,0/3-ST-3,5 C1,3R1,3 No. 19 98 20 5
X8	Restart lock (STO function)	FMC 1,5/4-ST-3,81 CN2BD2:X8SO, No. 17 03 06 7

9.1.3 Encoder splitter DDK21, DDK22

The servo amplifier ECOVARIO®114 D has one encoder input for each axis (X11 for axis 1 and X12 for axis 2). Via encoder splitters which are available as accessories it is possible to use an additional encoder per axis:

- DDK21: 1 x Absolute encoder (HD Sub-D 15-pole) + 1 x Incremental encoder (Sub-D 9-pole)
- DDK22: 2 x Incremental encoder (Sub-D 9-pole).

DDK21:

*Table 9.3: DDK21: Pin assignment **port A***

	Standard encoder (Incremental)		JAT SinCos-Encoder (Optolab)	
Pin	Signal	Description	Signal	Description
1	U_P	5 V, 500 mA*	U_P	5 V, 500 mA*
2	A	Track A	sin+	Sine +
3	B	Track B	cos+	Cosine +
4	Z	Track N	Z	Index track
5	$+T_{SENSE}$	Temp.sensor**	$+T_{SENSE}$	Temp.sensor**
6	D_{GND}	Ground	D_{GND}	Ground
7	/A	Track /A	sin-	Sine -
8	/B	Track /B	cos-	Cosine -
9	/Z	Track /N	/Z	Index track

*) 500 mA total current at Port A + Port B.
) Temperature sensor may only be connected to **one of the two ports

*Table 9.4: DDK21: Pin assignment **port B***

	BISS® (Absolute value encoder)	
Pin	Signal	Description
1	U_P	5/11 V, can be switched, 500 mA*
2	n.c.	-
3	n.c.	-
4	Data	Data
5	$+T_{SENSE}$	Temperature sensor**
6	D_{GND}	Ground
7	n.c.	
8	n.c.	
9	/Data	/Daten
10	$-T_{SENSE}$	Temperature sensor**
11	n.c.	
12	$+V_{ENCSENSE}$	Voltage switching, cf. Tab. 9.5
13	n.c.	
14	CLK	CLK
15	/CLK	/CLK

*) 500 mA total current at Port A + Port B.

Table 9.5: Voltage switching

$+V_{ENCSENSE}$ (Pin 12)	Output voltage Pin 1 (U_P)
Open or bridge to pin 1 (U_P)	5 V
Bridge to pin 6 (D_{GND})	11 V

DDK22:

*Table 9.6: DDK22: Pin assignment **port A***

	Standard encoder (Incremental)		JAT SinCos encoder (Optolab)	
Pin	Signal	Description	Signal	Description
1	U_P	5 V, 500 mA*	U_P	5 V, 500 mA*
2	A	Track A	sin+	Sine +
3	B	Track B	cos+	Cosine +
4	Z	Track N	Z	Index track
5	$+T_{SENSE}$	Temp.sensor**	$+T_{SENSE}$	Temp.sensor**
6	D_{GND}	Ground	D_{GND}	Ground
7	/A	Track /A	sin-	Sine -
8	/B	Track /B	cos-	Cosine -
9	/Z	Track /N	/Z	Index track

*) 500 mA total current at Port A + Port B.
) Temperature sensor may only be connected to **one of the two ports!

*Table 9.7: DDK22: pin assignment **port B***

	Standard encoder (Incremental)	
Pin	Signal	Description
1	U_P	5 V, 500 mA*
2	A	Track A
3	B	Track B
4	n.c.	-
5	$+T_{SENSE}$	Temp.sensor**
6	D_{GND}	Ground
7	/A	Track /A
8	/B	Track /B
9	n.c.	-

*) 500 mA total current at Port A + Port B.
) Temperature sensor may only be connected to **one of the two ports!
Note: Port B without index track evaluation.
No antivalence supervision.

9.2 Cables

The insulated shield mesh of the cables must be connected to the device potential or the PE conductor resp. If the grounding is improper or the mesh lies freely dangerous voltages may occur. The following table lists the cables available for connection of the motors of Jenaer Antriebstechnik GmbH. If other cables are used functional errors of the drive and EMC problems might occur. If you intend to use other cables please double-check with our application department whether your cables are appropriate.

Table 9.8: ECOVARIO® 114 D accessories, cables

Cable type	Use	Characteristic
Encoder cables		
INK65-491-525-xxx	Encoder cable for motors with incremental or SINCOS encoders	shielded, twisted in pairs (4x(2x0.14)+(2x0.5)), Ø: 9.5mm, trailing capability from bending radius >120mm
ABS65-300-525-xxx	Encoder cable for motors with BiSS® encoders	
Motor cables		
MOT43-132-721-xxx	Motor cable extension for ECOSTEP motors series 23S	shielded, 5xAWG20, up to 6 A, 300 V, Ø: 6.5 mm, trailing capability from bending radius >35 mm
MOT34-132-722-xxx	Motor/brake cable extension for ECOSTEP motors series 23S	shielded, 7x7.5, up to 8A, 300/500V, Ø: 10.5 mm, trailing capability

All cables in table 9.8 are available up to 50 m. All cables are trailing cables.

10 Annex

10.1 Glossary

Ballast circuit	A ballast circuit transforms energy that is fed back into the DC link during braking of a motor into heat. Thus it is made sure that the DC link voltage does not increase too much.
Baud rate	Unit of measure for the transmission rate of data in serial interfaces. The baud rate indicates the number of possible changes of state of the transmitted signal per second (1 baud = 1 state change/s). The baud rate can be lower than the bit rate (one bit is coded in several signal states). „Baud rate“ in this document refers to signals in which one bit is defined with the two signal states HIGH and LOW. In this case the bit rate equals the baud rate.
BISS®	Bidirectional sensor interface of iC-Haus GmbH, Bodenheim
Bitrate	Transmission rate of information in bit/second
Bootloader mode	State of the servo amplifier in which a new loadware can be transmitted into the servo amplifier‘s memory.
Brake chopper	The brake chopper circuit produces a high inrush current, that initiates a quick pulling of the brake. After pulling the brake the current is reduced to a lower holding current.
Capture input	Control input for quick event capture of a machine or plant
Circuit breaker	Switch that cuts the power if an error current limit is exceeded
DC link voltage	Smoothed DC voltage
Disable	Take back ENABLE signal for the servo amplifier: ENABLE input = 0 V
Encoder	Measuring system, that transforms the angular position of a shaft or the position of a linear system into coded data
EMC	Electromagnetic compatibility
Enable	enable signal for the servo amplifier (24 V_{DC} signal)
SD protection	Protection against electrostatic discharge
Field bus interface	Here: CANopen, EtherCAT®, Profinet or PROFIBUS DP-V0
Firmware	Part of the software that is stored to ROM (read-only memory), the firmware contains the start-up routines.
Ground fault	Here: electrically conductive connection between a power system or motor phase and the PE conductor

HIPERFACE®	Universal interface for electric actuators by SICK STEGMANN GmbH, Donaueschingen
Host	Computer in a multi computer system that controls the whole system
ID number	Identification number of a special device in a bus structure
Loadware	Part of the software that can be stored to the flash memory of the servo amplifier
Node	Device connection in a bus structure
Positively-opening contacts	Form of relays and contactors that prevents single contacts from switching in case of errors
Repeater	Equipment for reinforcing and regenerating of signals in a network
Restart lock (AS)	Technical measure that prevents actuators safely by mechanical elements (positively driven contacts) from restarting indeliberately.
RMS	Root Mean Square
Sequencer programming	Programming a work schedule in which a sequence of events is defined depending on external states (input data), internal states (actual values) or time states
Short circuit	Here: electrically conductive connection between two power systems or motor phases
STO function	Safe Torque Off; safety function defined in EN DIN 61800-5-2. The motor is not supplied with energy and cannot generate a rotation. The STO function is used for the implementation of the restart lock.
Token passing	Hybrid access method for multimaster systems; token passing uses a token, or series of bits, to grant a master permission to transmit over the network, while the transmission between master and slave is carried out after the master-slave principle
Token system	In networking, a token is a special series of bits that travels around a token-ring network. As the token circulates, computers attached to the network can capture it. The token acts like a ticket, enabling its owner to send a message across the network. There is only one token for each network, so there is no possibility that two computers will attempt to transmit messages at the same time.
Watchdog	Supervisory software

10.2 Index of standards and directives

DIN 912: replaced by DIN EN ISO 4762

DIN 6 798: drawn back without replacement

DIN EN 50 170: General purpose field communication system

DIN EN 50 178 Electronic equipment for use in power installations

DIN EN 60 204: Safety of machinery - electrical equipment of machines - Part 1: General requirements

DIN EN 61 800-3: Adjustable speed electrical power drive systems - Part 3: EMC product standard including specific test methods

DIN EN 61800-5-1: Adjustable speed electrical power drive systems - Part 5-1: Safety requirements; Electrical, thermal and energy

DIN EN 61800-5-2: Adjustable speed electrical power drive systems - Part 5-2: Safety requirements; Functional safety

DIN EN ISO 4762: Hexagon socket head cap screws

DIN EN ISO 12100-1: Safety of machinery - Basic concepts, general principles for design - Part 1: Basic terminology, methodology

DIN EN ISO 12100-2: Safety of machinery - Basic concepts, general principles for design - Part 2: Technical principles

DIN EN ISO 13 849-1:2006 Safety of machinery − Safety-related parts of control systems − Part 1: General principles for design

IEC 61000-4-2: Electromagnetic compatibility (EMC) - Part 4-2: Testing and measurement techniques - Electrostatic discharge immunity test

IEC 61000-4-4: Electromagnetic compatibility (EMC) - Part 4-2: Testing and measurement techniques - Electrical fast transient/burst immunity test

2006/42/EC: Directive of the European Parliament and the Council on the approximation of the laws of the Member States relating to machinery

2006/95/EC: Council Directive on the harmonization of laws of Member States relating to electrical equipment designed for use within certain voltage limits

2004/108/EC: Council Directive on the approximation of the laws of the Member States relating to Electromagnetic Compatibility