TA24

series

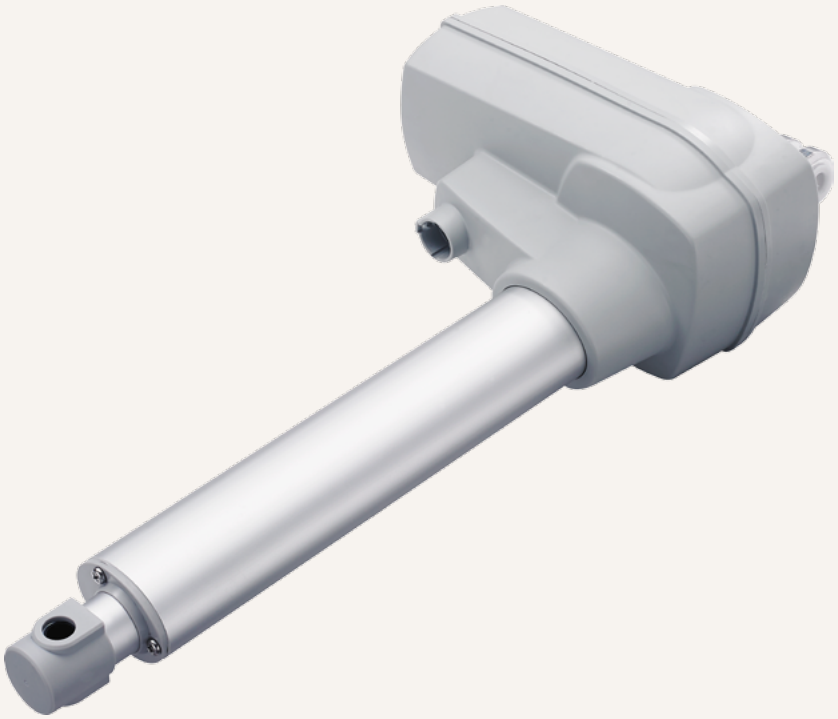

Product Segments

- **Care Motion**
- **Industrial Motion**

TiMOTION's TA24 series linear actuator is designed primarily up to 1000Kg patient lifts. This application requires a linear actuator whose design is focused on safety, reliability and effortless operation. A significant feature of the TA24 is the manual release function that allows for lowering of the patient in the event of an emergency or electrical power outage. The TA24 linear actuator is available with an optional IP66 or IP66W rating.

General Features

Voltage of motor	24 or 36V DC
Maximum load	10,000N in push
Maximum load	6,000N in pull
Maximum speed at full load	8.0mm/s (with 6,000N in a push or pull condition)
Minimum installation dimension	Stroke+190mm
Minimum installation dimension	Stroke+267mm (for patient hoist)
Color	Black or grey
IP rating	Up to IP66W
Certificate	EN60601-1 compliant
Operational temperature range	+5°C~+45°C
Options	Safety nut, Hall/POT sensor(s), manual release for patient hoist applications

Load and Speed

CODE	Rated Load		Self Locking Force (N)	Typical Current (A)		Typical Speed (mm/s)	
	PUSH N	PULL N		No Load 32V DC	With Load 24V DC	No Load 32V DC	With Load 24V DC
Motor Speed (4200RPM, Long motor)							
B	6000	6000	6000	1.5	6.0	13.9	8.0
C	8000	6000	8000	1.5	9.0	11.9	6.4
D	10000	6000	10000	1.5	9.8	10.3	5.4

Note

1 With a 36V motor, the current is approximately two-thirds the current measured in 24V; speed will be similar for both voltages.

2 Above self lock performance needs working with Timotion control system in push direction.

Performance Data

Motor Speed (4200RPM, Long motor)

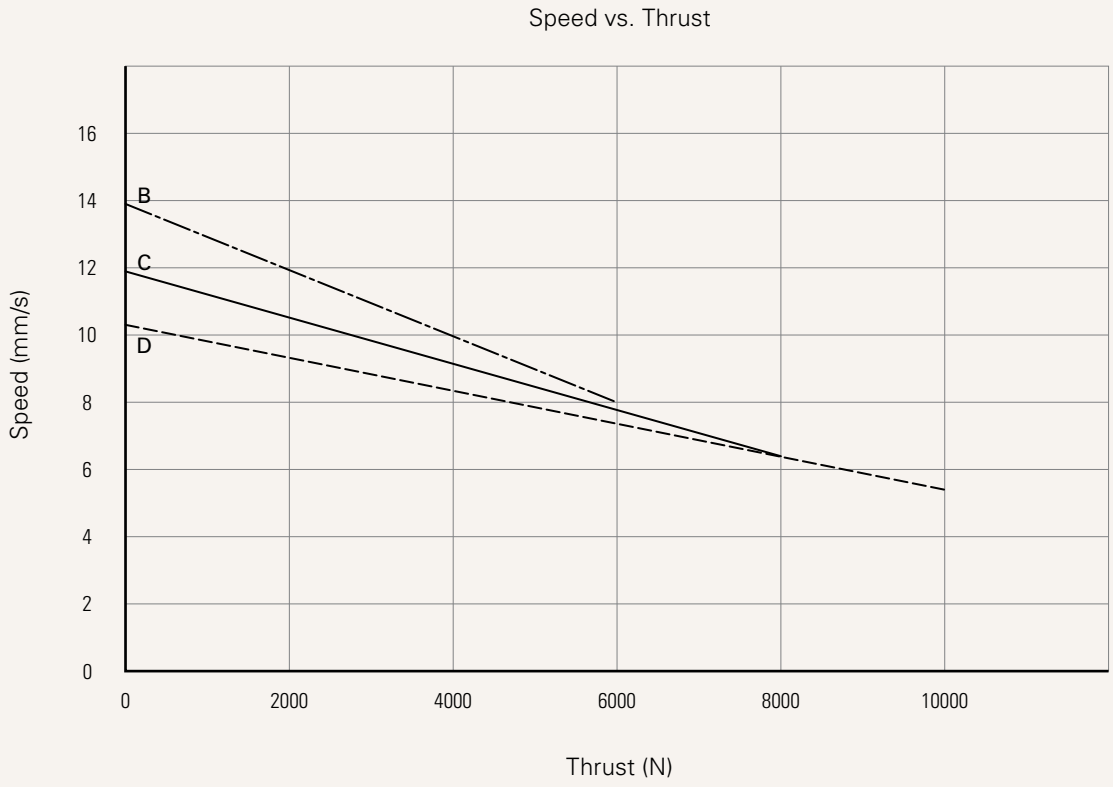

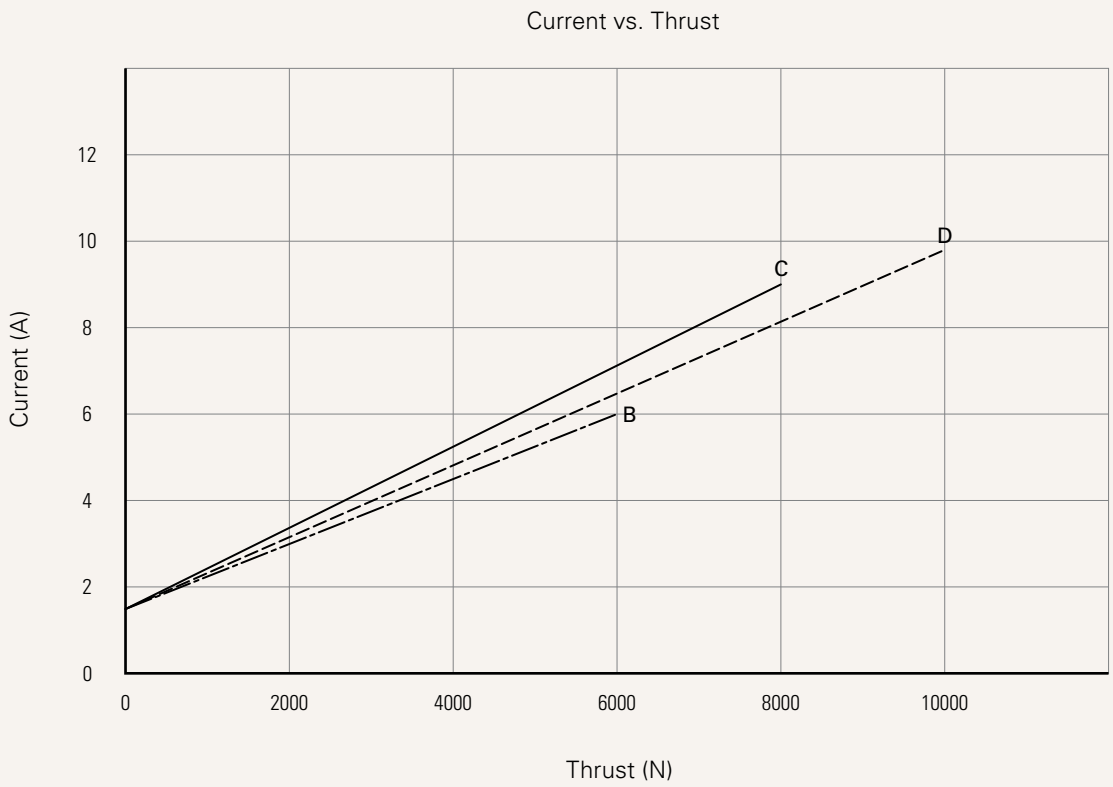

Note

1 The performance data in the curve charts shows theoretical value only.

Drawing

Standard Dimensions
(mm)

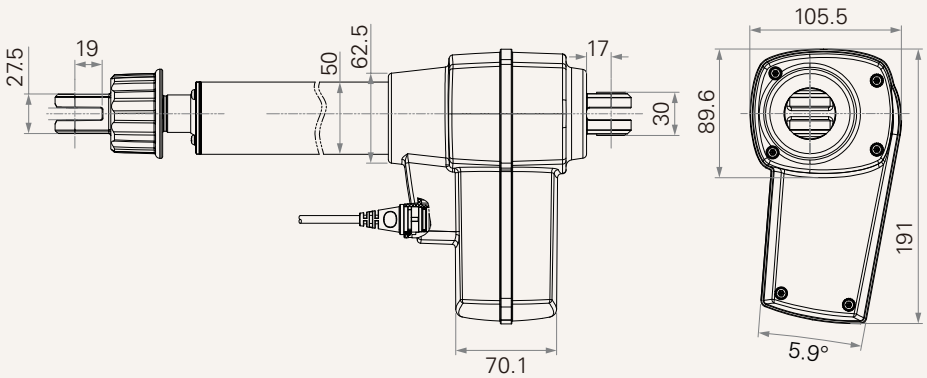

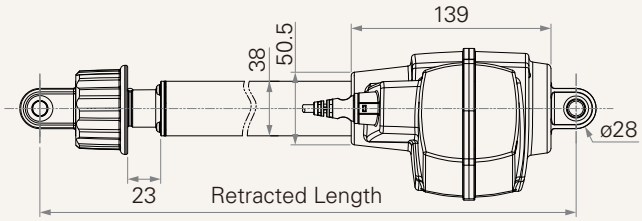

Retracted length (mm)

1. Calculate A+B = Y
2. Retracted length needs to ≥ Stroke+Y

A. Attachment	General	Patient hoist
Front attachment (mm)		
1, 2, 5, 6	+190	-
7, 8, 9	+202	-
J	+193	-
F	-	+267

B. Stroke vs Load	General			Patient hoist
Stroke (mm)	=6000	=8000	=10000	
0~150	-	-	+5	-
151~200	-	+5	+10	-
201~250	+5	+10	+15	-
251~300	+10	+15	+20	+5
301~350	+15	+20	+25	+10
351~400	+20	+25	+30	+15

For stroke over 400mm, +5 mm for each increment of 50mm stroke

Wire Definitions

CODE*	Pin					
	1	2	3	4	5	6
	(green)	(red)	(white)	(black)	(yellow)	(blue)
1	extend (VDC+)	N/A	N/A	N/A	retract (VDC+)	N/A

Note

* See ordering key - functions for limit switches

TA24 Ordering Key

TiMOTION

TA24

Version: 20170425-B

Voltage	2 = 24V	3 = 36V	5 = 24V, PTC	
Load and Speed	See page 2			
Stroke (mm)				
Retracted Length (mm)	See page 5			
Rear Attachment (mm)	6 = Aluminum casting, clevis U, slot 8.2, depth 17.0, hole 10.2 7 = Aluminum casting, clevis U, slot 8.2, depth 17.0, hole 12.2 8 = Aluminum casting, clevis U, slot 10.2, depth 17.0, hole 10.2		9 = Aluminum casting, clevis U, slot 10.2, depth 17.0, hole 12.2 C = Aluminum casting, clevis U, slot 8.2, depth 17.0, hole 10.2, T bushing	
Front Attachment (mm)	1 = Aluminum inner tube with punched hole + plastic cap, no slot, hole 10.2, with plastic inner 2 = Aluminum inner tube with punched hole + plastic cap, no slot, hole 12.2 5 = Aluminum inner tube with punched hole, no slot, hole 10.2, with plastic inner 6 = Aluminum inner tube with punched hole, no slot, hole 12.2		7 = Aluminum casting, clevis U, slot 6.2, depth 17.0, hole 10.2 8 = Aluminum casting, clevis U, slot 6.2, depth 17.0, hole 12.2 9 = Aluminum casting, clevis U, slot 6.2, depth 17.0, hole 10.2, with T bushing J = Aluminum casting, no slot, hole 10.2, for Dental Chair	
Direction of Rear Attachment (Counterclockwise)	1 = 0°		3 = 90°	
Color	1 = Black		2 = Grey (Pantone 428C)	
IP Rating	1 = Without	2 = IP54	3 = IP66	5 = IP66W
Special Functions for Spindle Sub-Assembly	0 = Without 1 = Safety nut		2 = Standard push only 3 = Standard push only + safety nut	
Functions for Limit Switches	1 = Two switches at full retracted/extended positions to cut current			
Output Signals	0 = Without	1 = One Hall sensor	2 = Two Hall sensors	3 = POT
Connector	0 = DIN 6P, socket on gear box 1 = DIN 6P, 90° plug 2 = Tinned leads		E = MOLEX 8P, plug F = DIN 6P, 180° plug G = Audio plug	
Cable Length	0 = Without, for socket on gear box 1 = Straight, 500mm 2 = Straight, 750mm 3 = Straight, 1000mm 4 = Straight, 1250mm		5 = Straight, 1500mm 6 = Straight, 2000mm 7 = Curly, 200mm 8 = Curly, 400mm	

TA24 - Patient Hoist Ordering Key

TiMOTION

TA24

Version: 20170425-B

	Voltage	2 = 24V		5 = 24V, PTC
	Load and Speed	See page 2		
	Stroke (mm)			
	Retracted Length (mm)	See page 5		
	Rear Attachment (mm)	C = Aluminum casting, clevis U, slot 8.2, depth 17.0, hole 10.2, T bushing		
	Front Attachment (mm)	F = Aluminum casting, clevis U, slot 8.2, depth 19.0, hole 10.2, T bushing, for Manual Release		
	Direction of Rear Attachment (Counterclockwise)	1 = 0°		
	Color	1 = Black		2 = Grey (Pantone 428C)
	IP Rating	2 = IP54	3 = IP66	5 = IP66W
	Special Functions for Spindle Sub-Assembly	6 = Mechanical push only + safety nut		
	Functions for Limit Switches	1 = Two switches at full retracted/extended positions to cut current		
	Output Signals	0 = Without		
	Connector	1 = DIN 6P, 90° plug	F = DIN 6P, 180° plug	G = Audio plug
	Cable Length	1 = Straight, 500mm 2 = Straight, 750mm	3 = Straight, 1000mm 4 = Straight, 1250mm	5 = Straight, 1500mm 6 = Straight, 2000mm