Riduttori epicicloidali
Planetary Gearboxes

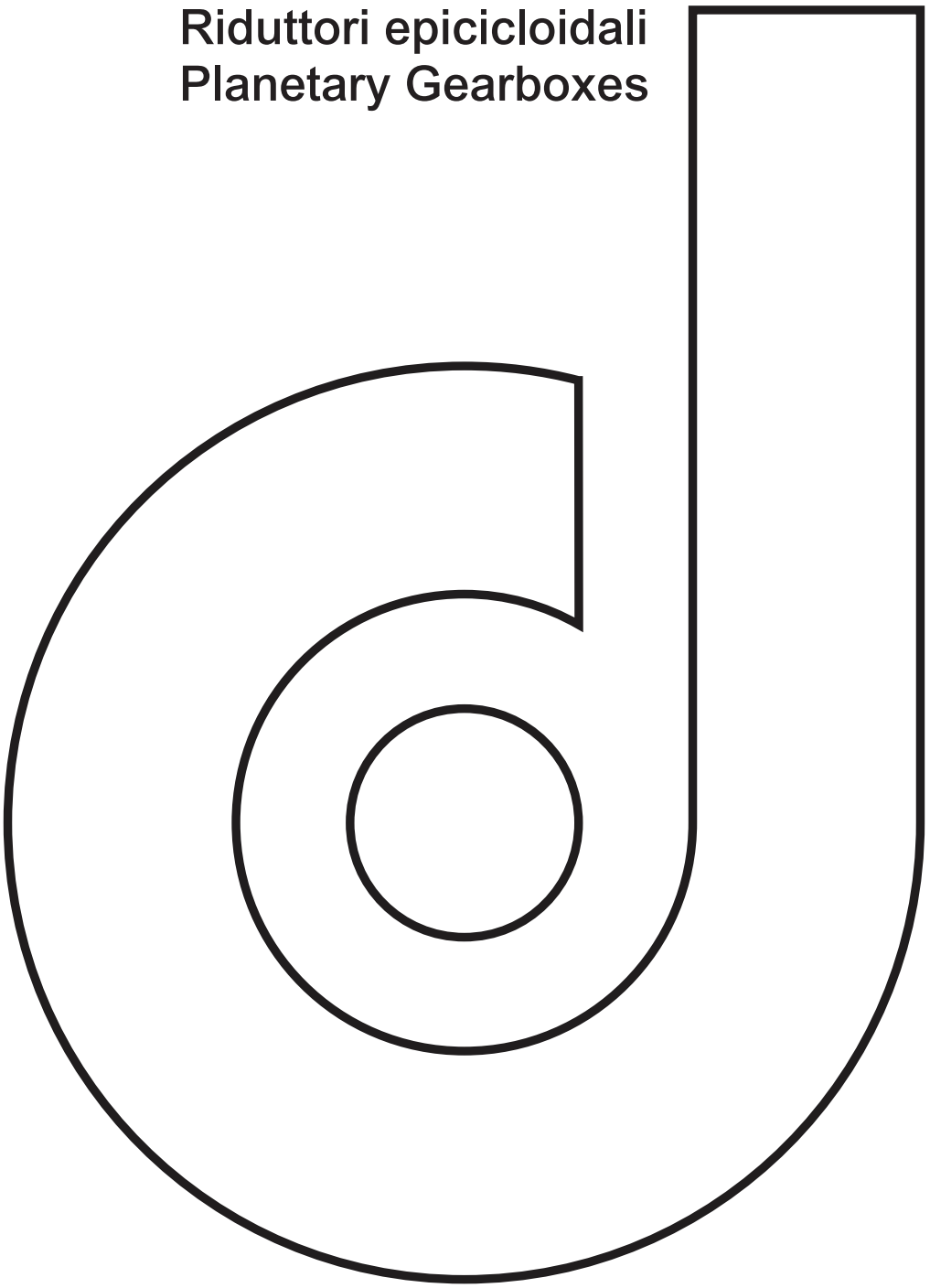

dinamic oil

TS/T1S/TLS/TRS/TR1S RE/RA 110-210-240-310-510-610

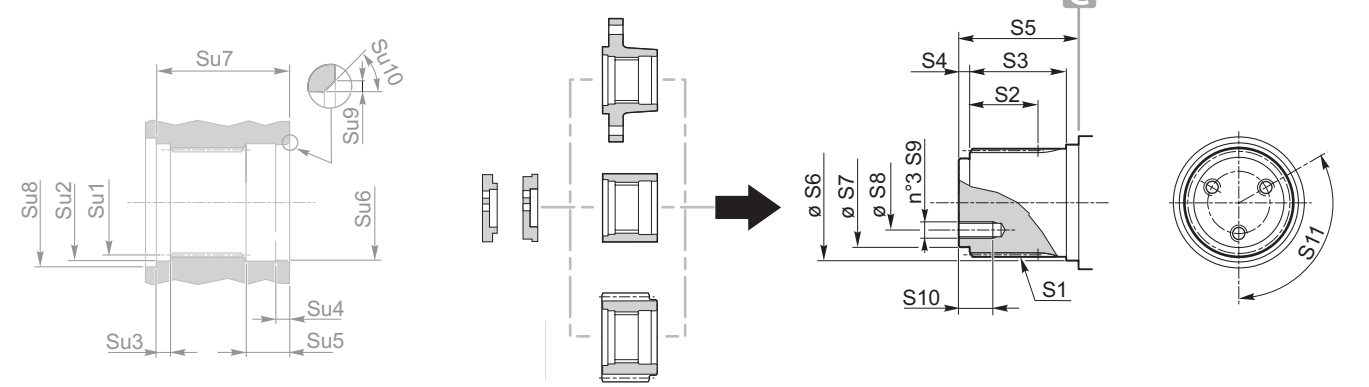

	RE - RA					
	110	210	240	310	510	610
Su1	A40x36 DIN5482	A40x36 DIN5482	A58x53 DIN5482	A58x53 DIN5482	A58x53 DIN5482	A58x53 DIN5482
Su2	42 H7	42 H7	60 H7	60 H7	60 H7	60 H7
Su3	7	7	7	7	7	7
Su4	6	6	10	10	10	10
Su5	20.5	20.5	25	25	25	25
Su6	42 H7	42 H7	60 H7	60 H7	60 H7	60 H7
Su7	62.5	62.5	69	69	69	69
Su8	51	51	72	72	72	72
Su9	1	1	1	1	1	1
Su10	1	1	1	1	1	1

	RE - RA					
	110	210	240	310	510	610
S1	B40x36 DIN5482	B40x36 DIN5482	B58x53 DIN5482	B58x53 DIN5482	B58x53 DIN5482	B58x53 DIN5482
S2	35	35	37	46	46	46
S3	50	50	50	60	60	60
S4	7	7	8	8	8	8
S5	62	62	68.5	78	78	78
S6	42 f7	42 f7	60 f7	60 f7	60 f7	60 f7
S7	35 f7	35 f7	50 f7	50 f7	50 f7	50 f7
S8	24	24	32	32	32	32
S9	M6	M6	M10	M10	M10	M10
S10	13	13	20	20	20	20
S11	120°	120°	120°	120°	120°	120°

		RE - RA															
	stages	110				210				240		310		510		610	
		TS	T1S	TRS	TR1S	TS	T1S	TRS	TR1S	TS	TRS	TS	TLS	TS	TLS	TS	TLS
A1		186	186	186	186	186	186	186	186	186	186	244	244	244	244	244	244
F0		219	219	219	219	219	219	219	219	219	219	272	272	272	272	272	272
F2		155 h7	150 f7	155 h7	150 f7	155 h7	150 f7	155 h7	150 f7	150 f7	155 f7	175 h8	175 h8	175 h8	175 h8	175 h8	175 h8
F3		194	195	194	195	194	195	194	195	195	194	245	245	245	245	245	245
F4		7	7	10	10	7	7	10	10	7	10	12	9	12	9	12	9
F5		15	15	15	15	15	15	15	15	15	15	20	20	20	20	20	20
F6		Ø11	Ø13	Ø11	Ø13	Ø11	Ø13	Ø11	Ø13	Ø12.5	Ø11	Ø12.5	Ø12.5	Ø12.5	Ø12.5	Ø12.5	Ø12.5
		M.. - 12.9															
		M10	M12	M10	M12	M10	M12	M10	M12	M12	M10	M12	M12	M12	M12	M12	M12
F7		36°	36°	36°	36°	36°	36°	36°	36°	36°	36°	36°	36°	36°	36°	36°	36°
FA1		13	13	30	30	13	13	30	30	13	30	39	39	39	39	39	39
FL	1	102	102	85	85	114	114	97	97	114	97	157	157	175	175	175	175
	2	145	145	128	128	157	157	140	140	157	140	209.5	209.5	239.5	239.5	233.5	233.5
	3	188	188	171	171	200	200	183	183	200	183	252.5	252.5	282.5	282.5	286	286
	4	231	231	214	214	243	243	226	226	243	226	295.5	295.5	325.5	325.5	329	329
FL7	2	183	183	166	166	195	195	178	178	195	178	279	279	297	297	297	297
	3	226	226	209	209	238	238	221	221	238	221	290.5	290.5	320.5	320.5	355.5	355.5
	4	269	269	252	252	281	281	264	264	281	264	333.5	333.5	363.5	363.5	367	367
FL8	2	257.5	257.5	240.5	240.5	269.5	269.5	252.5	252.5	269.5	252.5	370	370	388	388	388	388
	3	300.5	300.5	283.5	283.5	312.5	312.5	295.5	295.5	312.5	295.5	365	365	395	395	446.5	446.5
	4	343.5	343.5	326.5	326.5	355.5	355.5	338.5	338.5	355.5	338.5	408	408	438	438	441.5	441.5
T3	2	113.8	113.8	113.8	113.8	113.8	113.8	113.8	113.8	113.8	113.8	171.5	171.5	171.5	171.5	171.5	171.5
	3	113.8	113.8	113.8	113.8	113.8	113.8	113.8	113.8	113.8	113.8	113.8	113.8	113.8	113.8	171.5	171.5
	4	113.8	113.8	113.8	113.8	113.8	113.8	113.8	113.8	113.8	113.8	113.8	113.8	113.8	113.8	113.8	113.8
T4	2	184	184	184	184	184	184	184	184	184	184	183	183	183	183	183	183
	3	184	184	184	184	184	184	184	184	184	184	184	184	184	184	183	183
	4	184	184	184	184	184	184	184	184	184	184	184	184	184	184	184	184

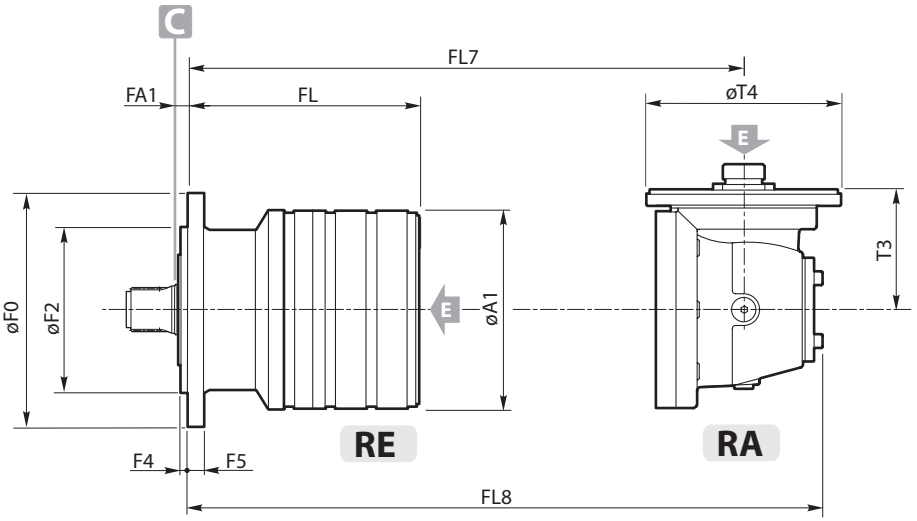

110 ÷ 240

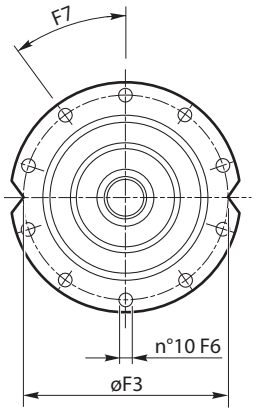

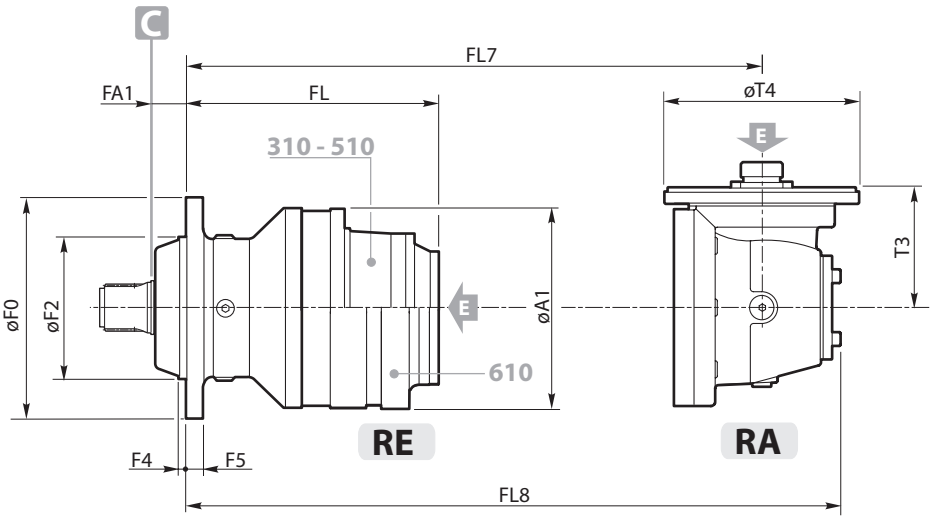

310 - 510
610

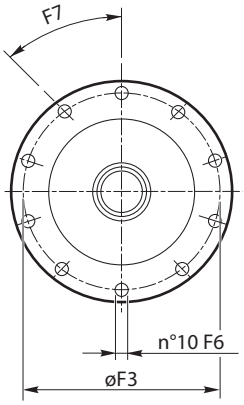

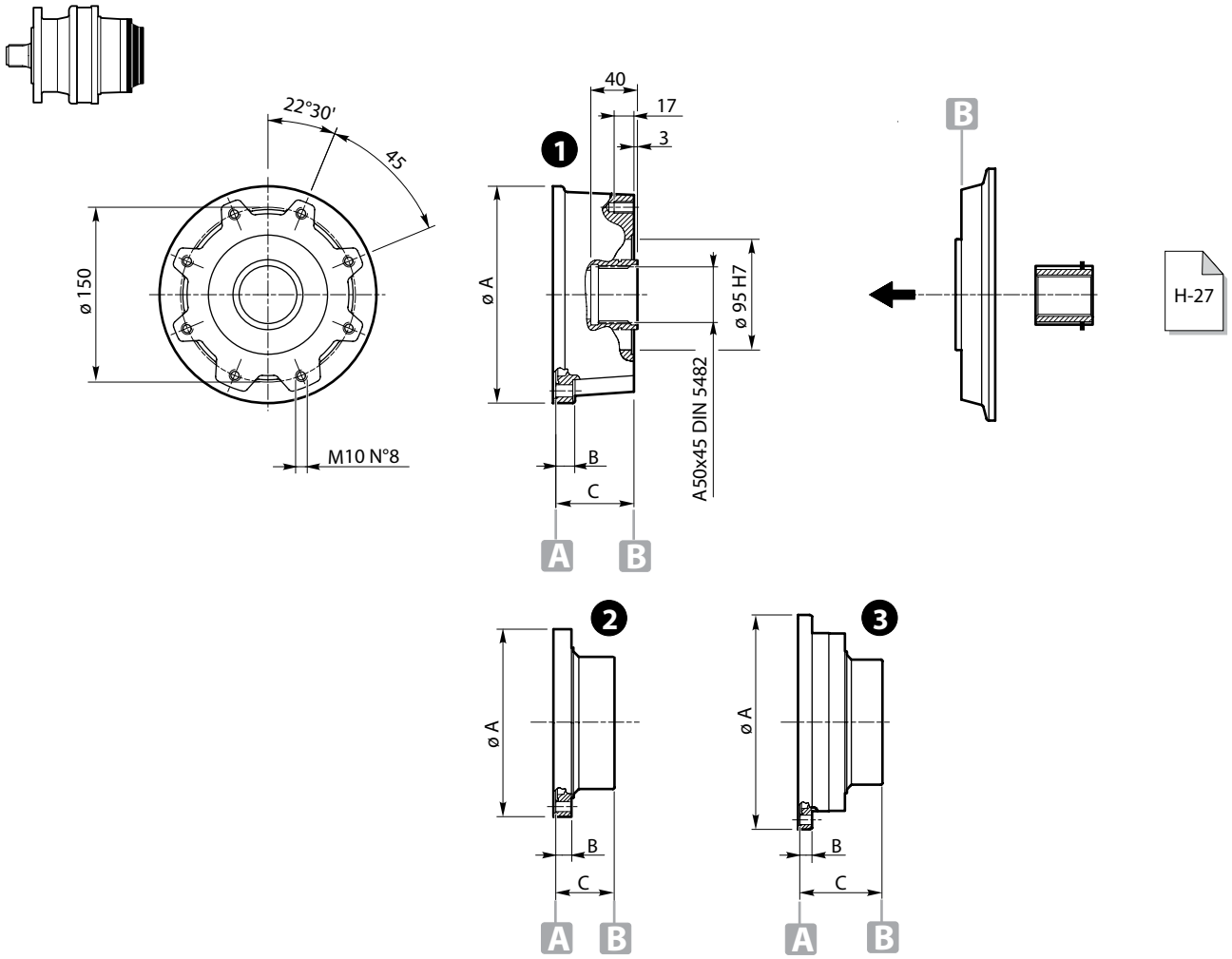

1

ø A	B	C	Code
186	14.5	67	K0700A1

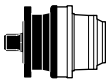

RE 111 - 112 - 113 - 114
RE 211 - 212 - 213 - 214
RE 241 - 242 - 243 - 244
RE 312 - 313 - 314
RE 512 - 513 - 514
RE 613 - 614
RE 813 - 814
RE 1023 - 1024
RE 1523 - 1524
RE 2004
RE 2524
RE 3004
RE 3514-4804
RE 6004L
RE 8005 - 8005L
GB 12015 - 12015L
GB 16005 - 16005L
CC30-CC120

2

ø A	B	C	Code
244	20.5	76.5	K0700D2

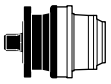

RE 311-511
RE 611 - 612
RE 812-1022
RE 1522-2003
RE 2523-3003
RE 3513-4803
RE 6003 - 6003L
RE 6004 - 6004L
RE 8004 - 8004L
GB 12014 - 12014L
GB 16004 - 16004L
GB 21004 - 21005
GB 26005-31005
GB 40005-45005
GB 53005
CC350

3

ø A	B	C	Code
295	16	121	K0700D2

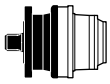

RE 811
RE 1021
RE 2522
RE 3002
RE 3512
RE 8003 - 8003L
GB 12013 - 12013L
GB 16003L
GB 26004
GB 31004
GB 40004
GB 85005
GB 110005
CC1000
CC600

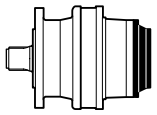

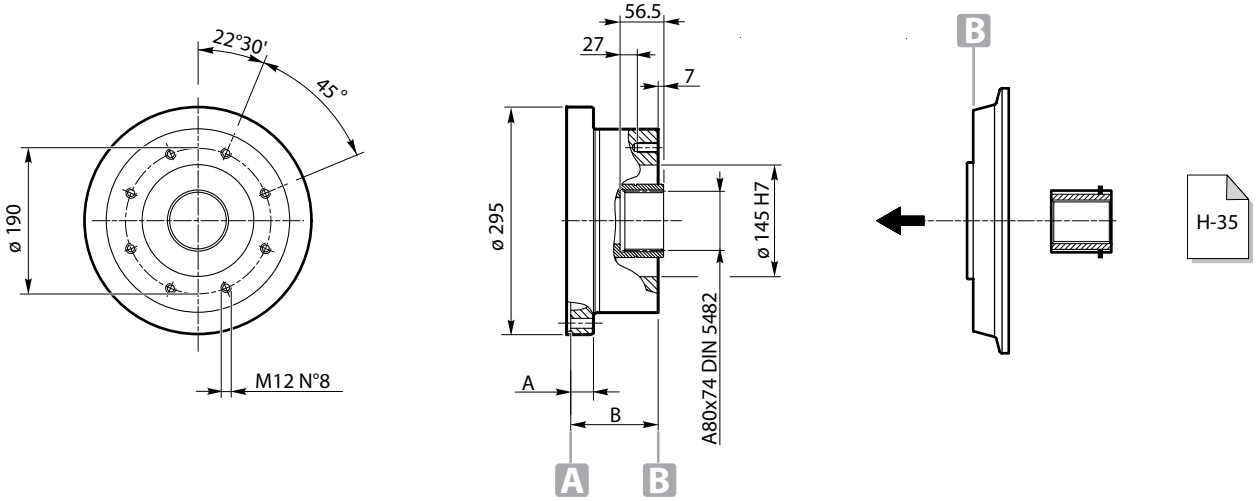

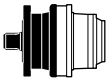

	A	B	Code
RE 811	30	114	K0700D3
RE 1021			
RE 2522			
RE 3002			
RE 3512			
RE 8003 - 8003L			
GB 12013 - 12013L			
GB 16003L			
GB 26004			
GB 31004			
GB 40004			
GB 85005			
GB 110005			
CC600	50	134	
CC1000	61	145	

CC30 - CC120

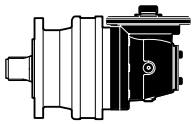

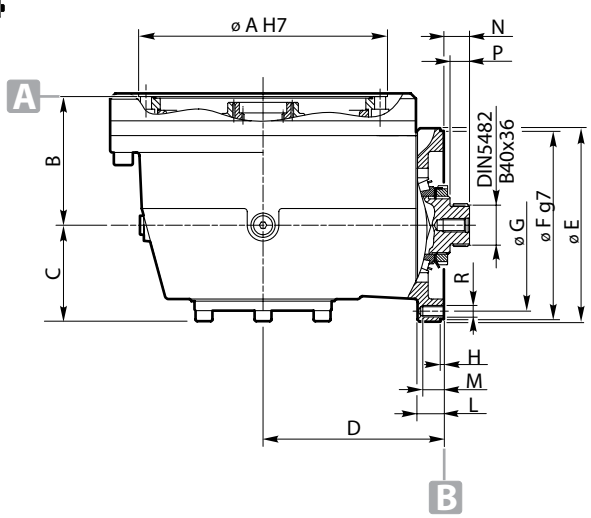

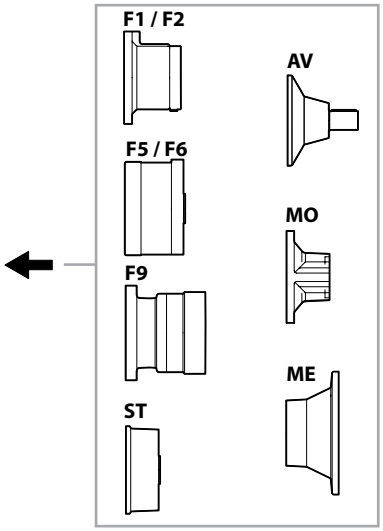

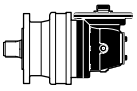

		øA	B	C	D	øE	øF	øG	H	L	N	P	R
CC30 **110/210/240**	**RA 112-113-114** **RA 212-213-214** **RA 242-243-244** **RA 313-314** **RA 513-514** **RA 814** **RA 1024** **RA 1524** **RA 2004L**	178	84	71.5	113.8	184	178	165	4	15.7	23.75	18.25	N°8-M10 AT 45°

		øA	B	C	D	øE	øF	øG	H	L	M	P	R
CC120 **310/510/610**	**RA 312** **RA 512-612** **RA 613-813** **RA 1023** **RA 1523** **RA 2003-2003L** **RA 2524** **RA 3004** **RA 3514** **RA 4804** **RA 6004-6004L** **GBA 12015-12015L** **GBA 16005-16005L** **GBA 21005**	236	122	91	171.5	183	178	165	3.5	25	24.25	18.5	N°8-M10 AT 45°

CC350 - CC600

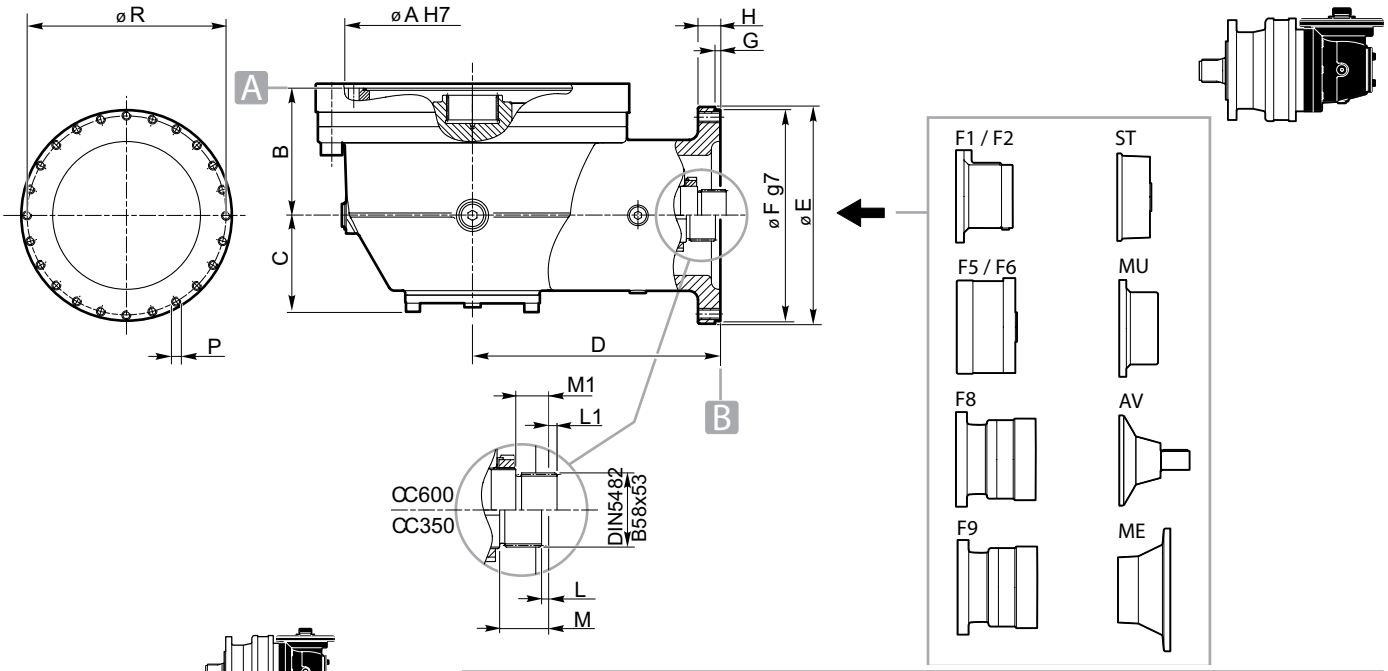

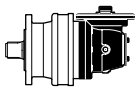

		øA	B	C	D	øE	øF	G	H	L	M	P	R
CC350 **810/1020**	**RA 812** **RA 1022** **RA 2523** **RA 3023** **RA 3523** **RA 8004-8004L** **GBA 12014-12014L** **GB 16004L** **GBA 26005** **GBA 31005** **GBA 40005**	285	142	108	276.75	242	236	6	25	5,5	38	N°24- M10 AT 15°	222

		øA	B	C	D	øE	øF	G	H	L1	M1	P	R
CC600 **810/1020**	**RA 812** **RA 1022** **RA 2523** **RA 3023** **RA 3523** **RA 8004** **GBA 12014** **GBA 16004** **GBA 26005** **GBA 31005** **GBA 40005**	285	198	128	310	293	285	8	27	6,5	25,5	N°12- M10 AT 30°	265

		øA	B	C	D	øE	øF	G	H	L1	M1	P	R
CC600 **1520/2000**	**RA 1522** **RA 2002** **RA 4803** **RA 6003-6003L** **GBA 16014** **GBA 21004** **GBA 45005** **GBA 53005** **GBA 61005**	340	206	128	310	293	285	8	27	6,5	25,5	N°12- M10 AT 30°	265

		øA	B	C	D	øE	øF	G	H	L1	M1	P	R
CC600 **2520/3000**	**RA 2522** **RA 3002** **RA 8003-8003L** **GBA 12013-12013L** **GBA 26004** **GBA 31004** **GBA 40004** **GBA 85005** **GBA 110005**	395	194	128	310	293	285	8	27	6,5	25,5	N°12- M10 AT 30°	265

CC1000

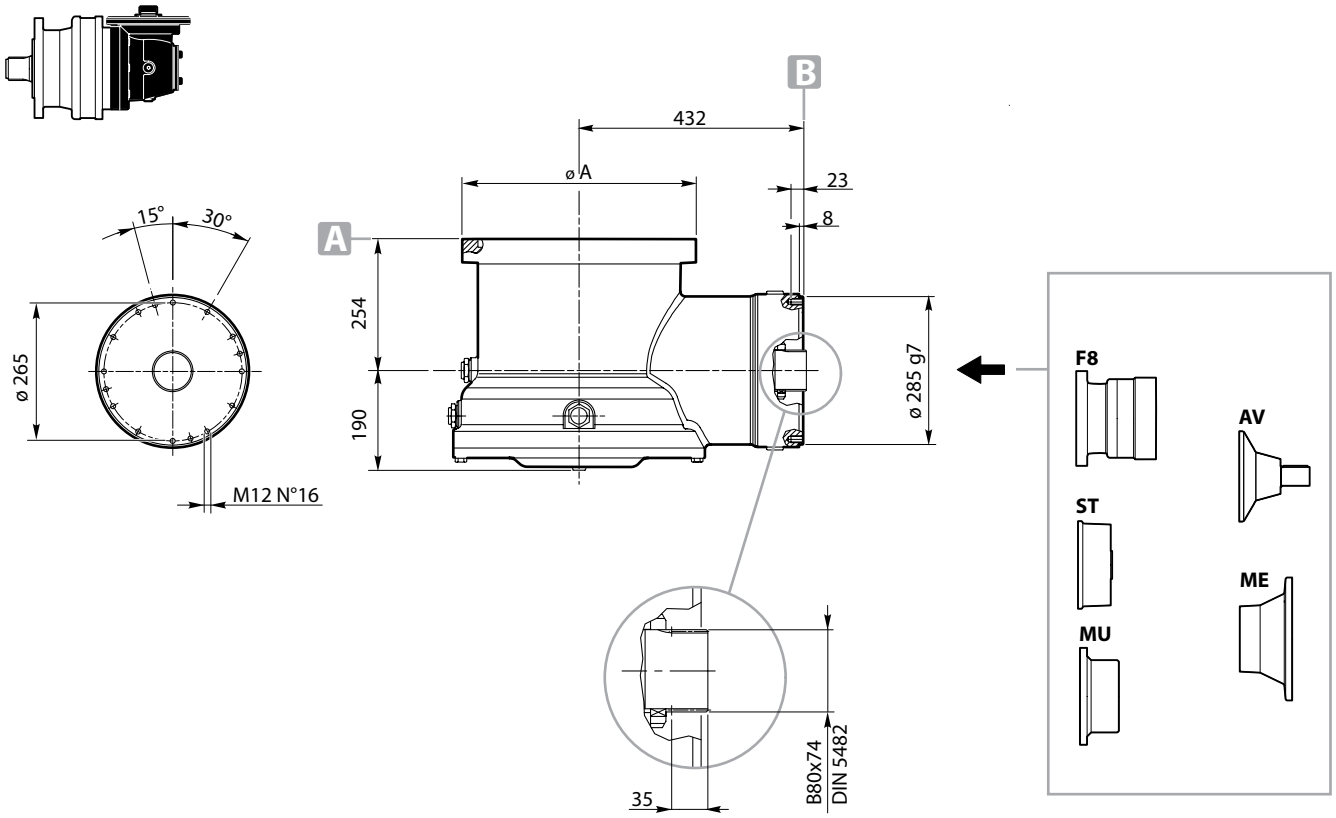

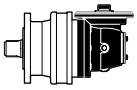

CC1000		ø A
	RA 3512-4802	452
	RA 6002-8002	490
	GBA 16003-16003L	452
	GBA 21003-26003	490
	GBA 45004	452
	GBA 53004-61004	490
	GBA 85004	490
	GBA 130005	452

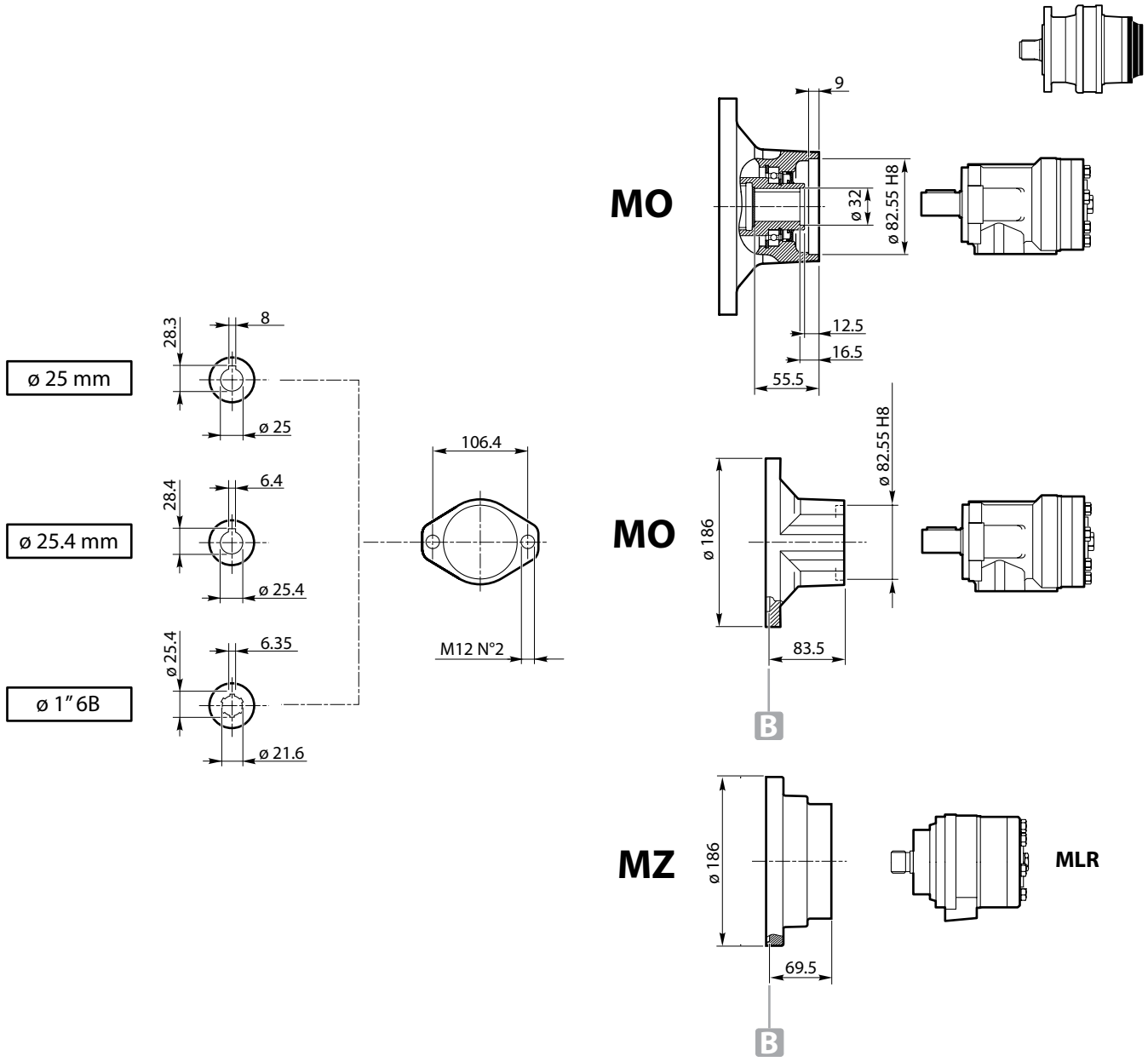

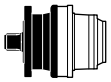

	Type	Code
RE 111 - 112 - 113 - 114	MO 25 MO 25.4 MO 1″6B MZ	K0700AA K0700AB K0700AC —
RE 211 - 212 - 213 - 214		
RE 241 - 242 - 243 - 244		
RE 312 - 313 - 314		
RE 512 - 513 - 514		
RE 613 - 614		
RE 813 - 814		
RE 1023 - 1024		
RE 1523 - 1524		
RE 2004		
RE 2524		
RE 3004		
RE 3514-4804		
RE 6004L		
RE 8005 - 8005L		
GB 12015 - 12015L		
GB 16005 - 16005L		
CC30-CC120		

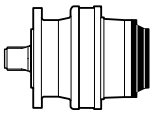

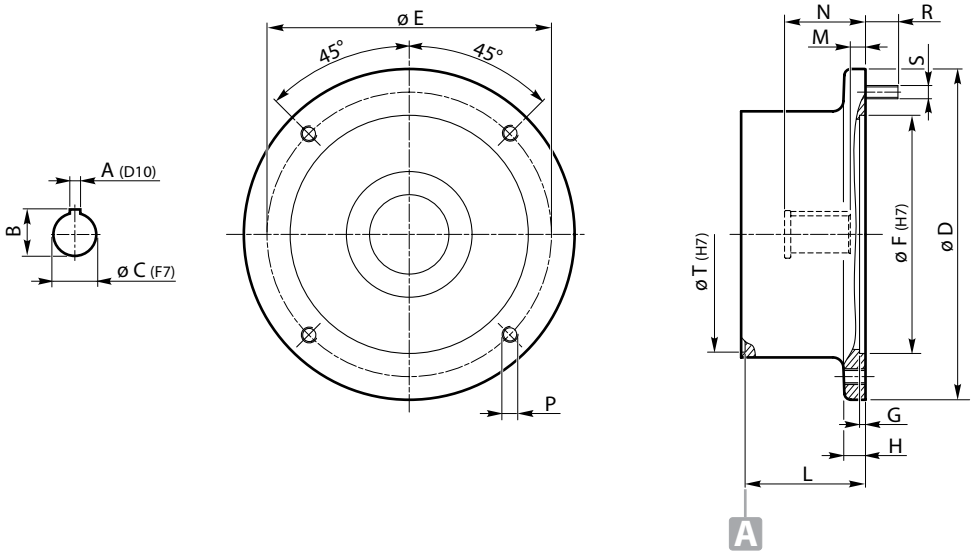

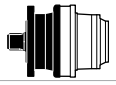

	Input type	Shaft			Flange											
		A	B	C	D	E	F	G	H	L	M	N	P	R	S	T
RE 111 - 112 - 113 - 114 RE 211 - 212 - 213 - 214 RE 241 - 242 - 243 - 244 RE 312 - 313 - 314 RE 512 - 513 - 514 RE 613 - 614 RE 813 - 814 RE 1023 - 1024 RE 1523 - 1524 RE 2004 - RE 2004L RE 2524 RE 3004 RE 3514 - 4804 RE 6004L RE 8005 - 8005L GB 12015 - 12015L GB 16005 - 16005L CC30-CC120	**ME 80**	6	21.8	19	200	165	130	4	16	82.5	6.5	44.5	—	25	N'4-M10	178
	ME 90	8	27.3	24	200	165	130	4	16	82.5	11.5	52	—	25	N'4-M10	
	ME 100/112	8	31.3	28	250	215	180	4.5	16	91	11.5	61	N°4-M12	—	—	
	ME 132	10	41.3	38	300	265	230	5	20	115.5	8	82.5	N°4-M12	—	—	
	ME 160	12	45.3	42	350	300	250	6	20	145	23	110.5	N°4-M16	—	—	
	ME 180	14	51.8	48	350	300	250	6	20	145	23	110.5	N°4-M16	—	—	

	Input type	Shaft			Flange											
		A	B	C	D	E	F	G	H	L	M	N	P	R	S	T
RE 311-511 RE 611 - 612 RE 812 -1022 RE 1522 - 2002 - 2002L RE 2003 RE 2523 - 3003 RE 3513 - 4803 RE 6003 - 6003L RE 6004 - 6004L RE 8004 - 8004L GB 12004 - 12004L GB 16004 - 16004L GB 21004 - 21005 GB 26005 - 31005 GB 40005 - 45005 GB 53005 CC350	**ME132**	10	41.3	38	300	265	230	5	20	125.5	8	82.5	N°4-M12	—	—	236
	ME160	12	45.3	42	344	300	250	7	20	154.5	23	110.5	N°4-M16	—	—	
	ME180	14	51.8	48	344	300	250	7	20	154.5	23	110.5	N°4-M16	—	—	
	ME225	18	64.4	60	450	400	350	7	20	191.5	30	143.5	N°4-M16	—	—	

	Input type	Shaft			Flange											
		A	B	C	D	E	F	G	H	L	M	N	P	R	S	T
RE 811 RE 1021 RE 2522 RE 3002 RE 3512 RE 8003 - 8003L GB 12013 - 12013L GB 16003L GB 26004 GB 31004 GB 40004 GB 85005 GB 110005 CC600 - CC1000	**ME200**	16	59.3	55	400	350	300	7	18	165	11.5	114.5	N°4-M18	—	—	285
	ME225	18	64.4	60	450	400	350	7	20	194	30.5	143.5	N°8-M18	—	—	
	ME250	18	6.4	65	550	500	450	7	22	195	17	145	N°8-ø19	—	—	
	ME280	20	79.9	75	550	500	450	7	22	195	12	145	N°8-ø19	—	—	

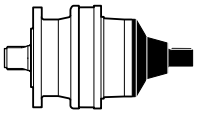

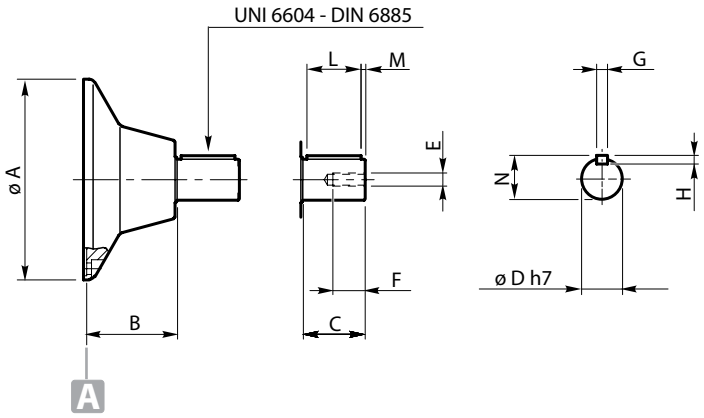

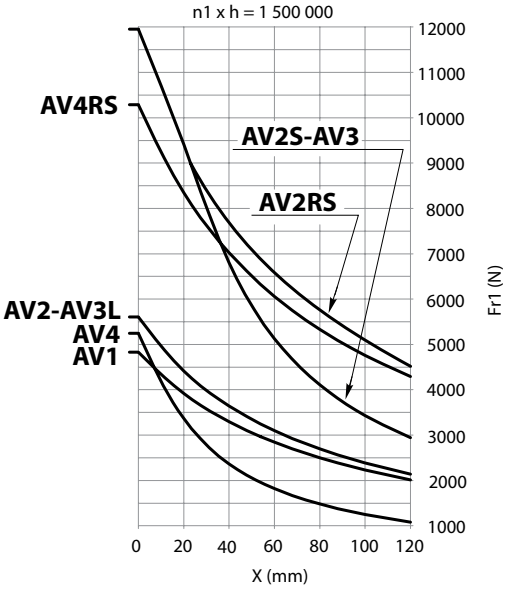

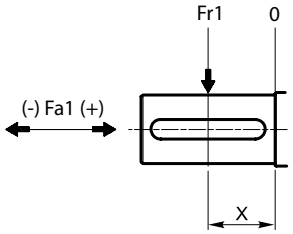

	n1 x h = 1 500 000 Fa1 max (Fr1 = 0)	
	Fa1 (+)	Fa1 (-)
AV1	4 800	4 800
AV2 - AV3L - AV4	7 800	7 800
AV2S - AV3	4 900	7 800
AV2RS - AV4RS	4 900	4 900

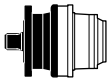

	Type	øA	B	C	øD	E	F	G	H	L	M	N	Code
RE 111 - 112 - 113 - 114 **RE 211 - 212 - 213 - 214** **RE 241 - 242 - 243 - 244** **RE 312 - 313 - 314** **RE 512 - 513 - 514** **RE 613 - 614 - 813 - 814** **RE 1023 - 1024 -1523 - 1524** **RE 2000 - 2524 - 3004 -3514** **RE 4804 - 6004L - 8005 - 8005L** **GB 12015 - 12015L** **GB 16005 - 16005L** **CC30-CC120**	**AV1**	186	83.5	58	38	M12	30	10	8	50	4	41	K0700AH
	AV2	186	96.5	82	42	M12	30	12	8	70	6	45	K0700AI
	AV3L	186	96.5	82	48	M16	40	14	9	70	6	51.5	K0700AI
	AV4	186	108.5	65	40	M12	30	12	8	60	2.5	43	K0700AX
	AV4RS	186	108.5	65	40	M12	30	12	8	60	2.5	43	K0700AX

	Type	øA	B	C	øD	E	F	G	H	L	M	N	Code
RE 311-511-611-612 **RE 812-1022-1522-2003** **RE 2523-3003-3513-4803** **RE 6003-6003L-6004-6004L** **RE 8004-8004L** **GB 12014-12014L-16004-16004L** **GB 21004-21005-26005-31005** **GB 40005-45005-53005** **GB 61005** **CC350-CC600**	**AV2**	244	106	82	42	M12	30	12	8	70	6	45	K0700DL
	AV2S	244	106	82	42	M12	30	12	8	70	6	45	K0700DL
	AV2RS	244	106	82	42	M12	30	12	8	70	6	45	K0700DL
	AV3	244	106	82	48	M16	40	14	9	70	6	51.5	K0700DM
	AV4	244	118	65	40	M12	30	12	8	60	2.5	43	K0700DJ
	AV4RS	244	118	65	40	M12	30	12	8	60	2.5	43	K0700DJ

AVF-AV110N-NL

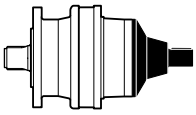

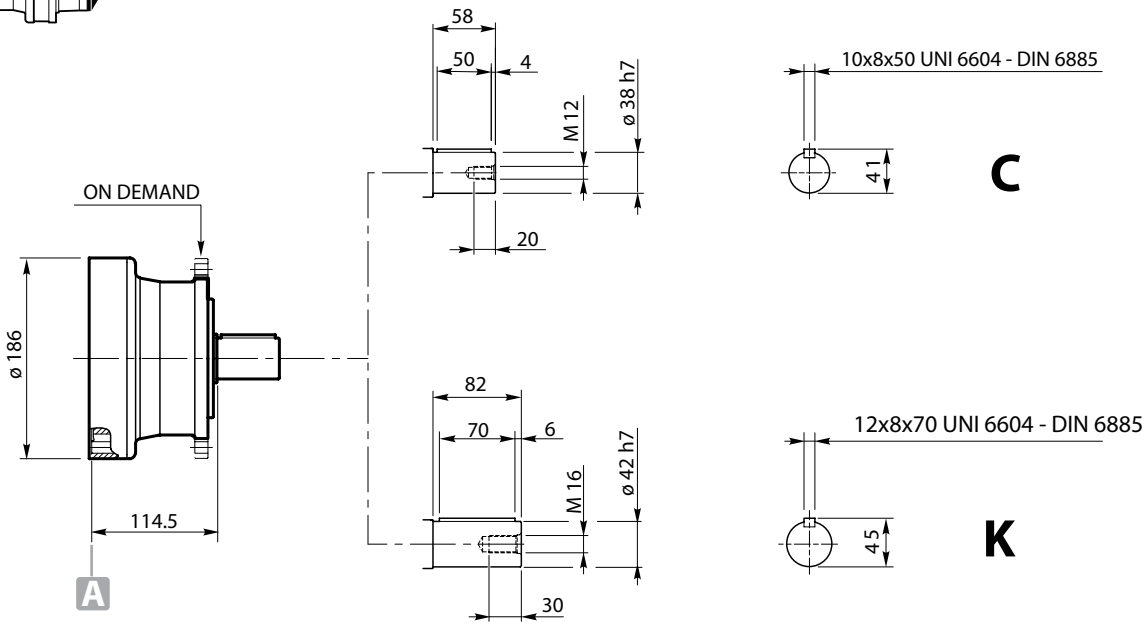

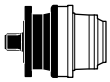

	Code
RE 111 - 112 - 113 - 114	K0700AY
RE 211 - 212 - 213 - 214	
RE 241 - 242 - 243 - 244	
RE 312 - 313 - 314	
RE 512 - 513 - 514	
RE 613 - 614	
RE 813 - 814	
RE 1023 - 1024	
RE 1523 - 1524	
RE 2004	
RE 2524	
RE 3004	
RE 3514	
RE 4804	
RE 6004L	
RE 8005 - 8005L	
GB 12015 - 12015L	
GB 16005 - 16005L	
CC30-CC120	

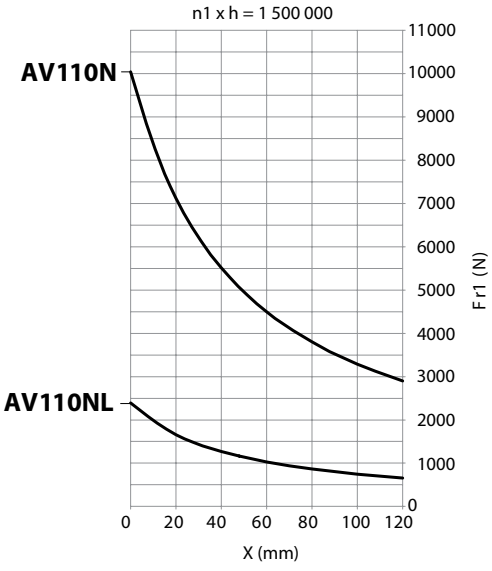

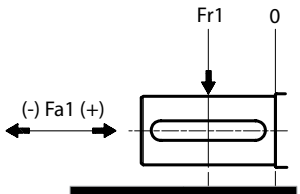

	n1 x h = 1 500 000 Fa1 max (Fr1 = 0)	
	Fa1 (+)	Fa1 (-)
AV110N	4 900	7 800
AV110NL	3 750	3 750

AVF-AV510N-NL

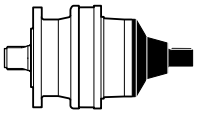

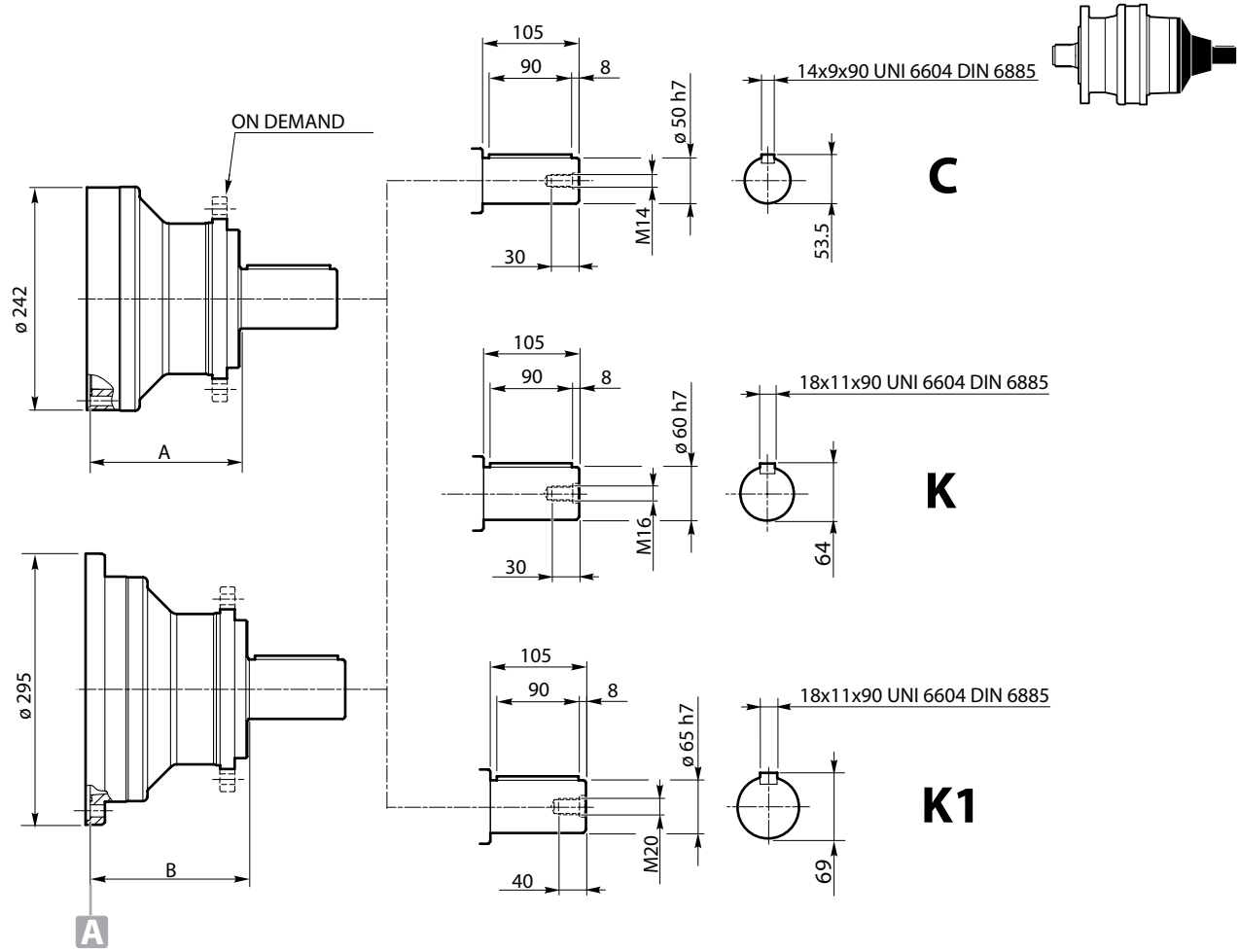

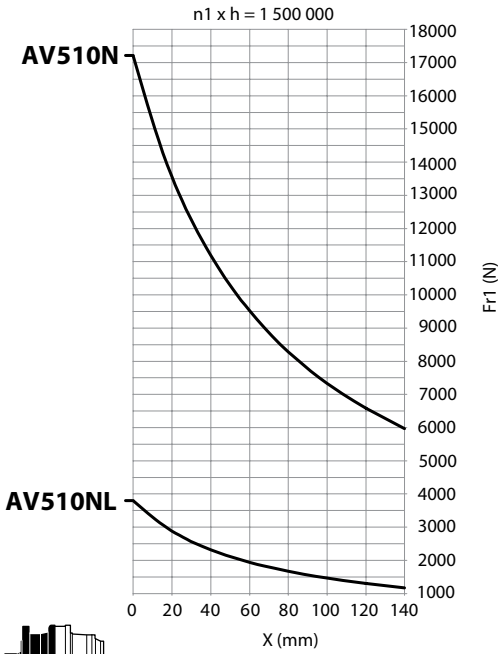

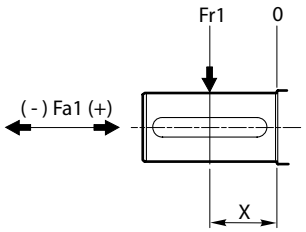

	n1 x h = 1 500 000 Fa1 max (Fr1 = 0)	
	Fa1 (+)	Fa1 (-)
AV510NL	6 600	6 600
AV510N	15 250	15 250

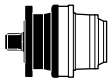

	A	B
RE 311-511-611-612-812-1022-1522-2003-2523-3003-3513-4803-6003-6003L	164	—
RE 6004-6004L-8004-8004L	164	—
GB 12014-12014L-16004-16004L-21004-21005-26005-31005-40005-45005	164	—
GB 53005-61005	—	172.5
RE 811-1021-2522-3002-3512-8003-8003L	—	172.5
GB 12013-12013L-16003L-26004-31004-40004-85005-110005	—	172.5
CC350	128	—
CC600	—	153

AVF-AV510TL

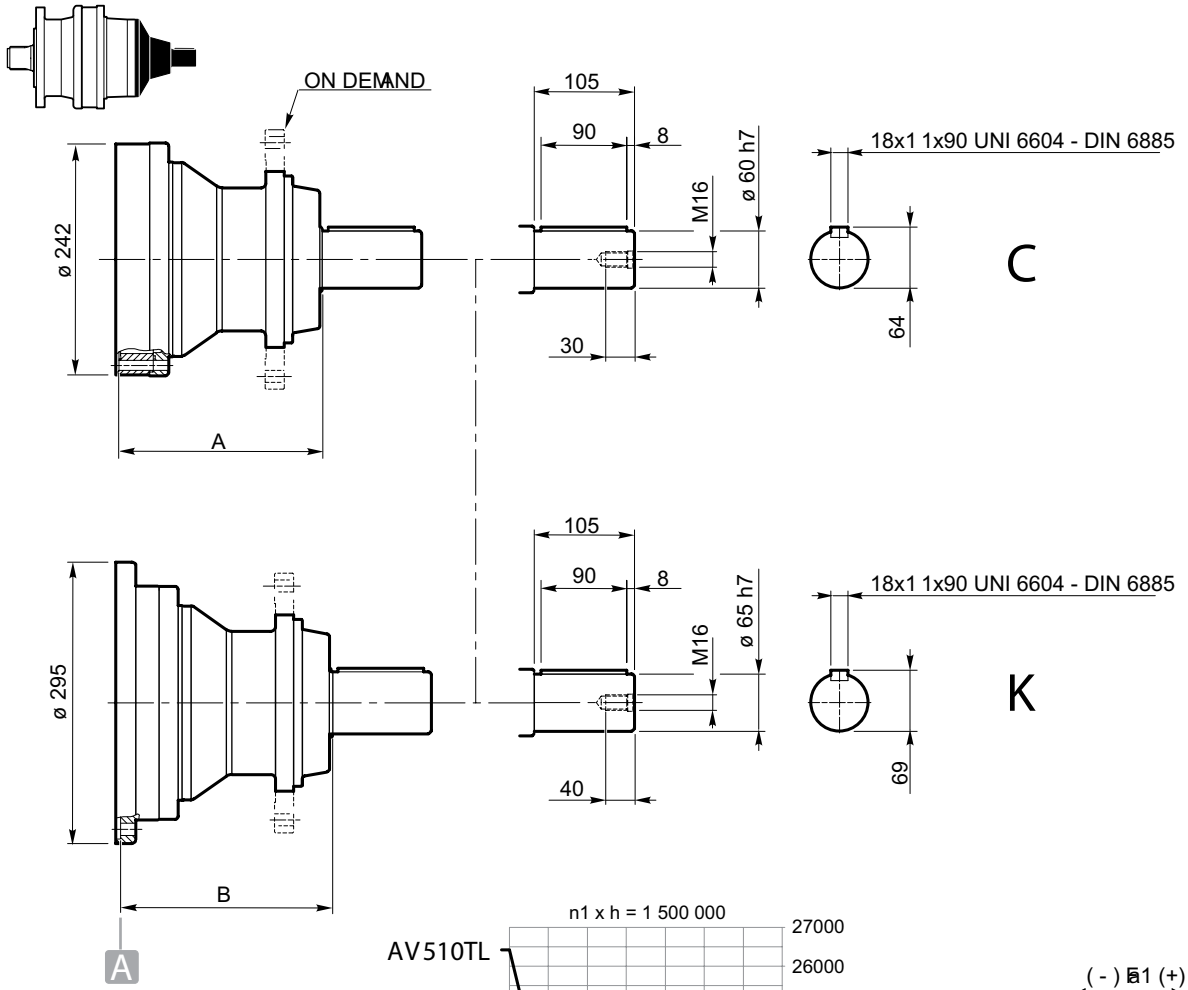

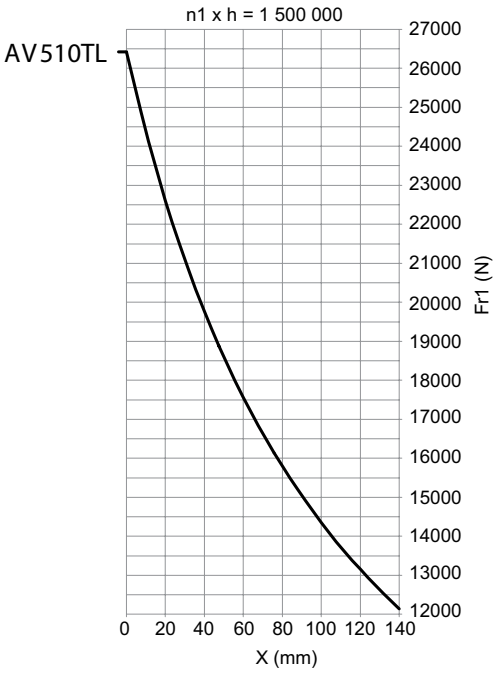

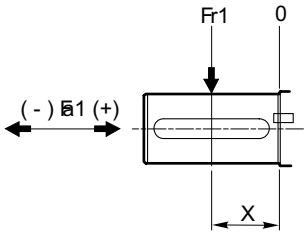

	n1 x h = 1 500 000 Fa1 max (Fr1 = 0)	
	Fa1 (+)	Fa1 (-)
AV510TL	21 600	21 600

	A	B
RE 311-511-611-612-812-1022-1522-2003-2523-3003-3513-4803-6003-6003L	212	—
RE 6004-6004L-8004-8004L	212	—
GB 12014-12014L-16004-16004L-21004-21005-26005-31005-40005-45005	212	—
GB 53005-61005	212	—
RE 811-1021-2522-3002-3512-8003-8003L	—	221
GB 12013-12013L-16003L-26004-31004-40004-85005-110005	—	221
CC350	176	—
CC600	—	201

AVF-AV810N-NL

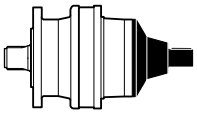

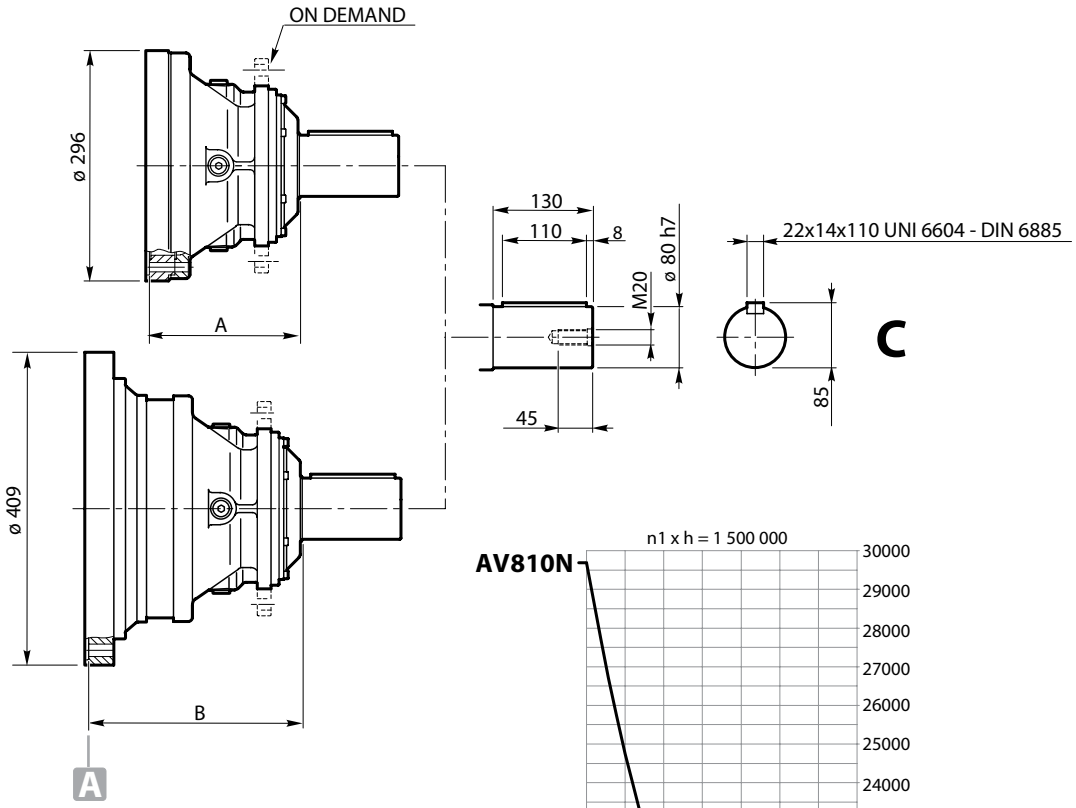

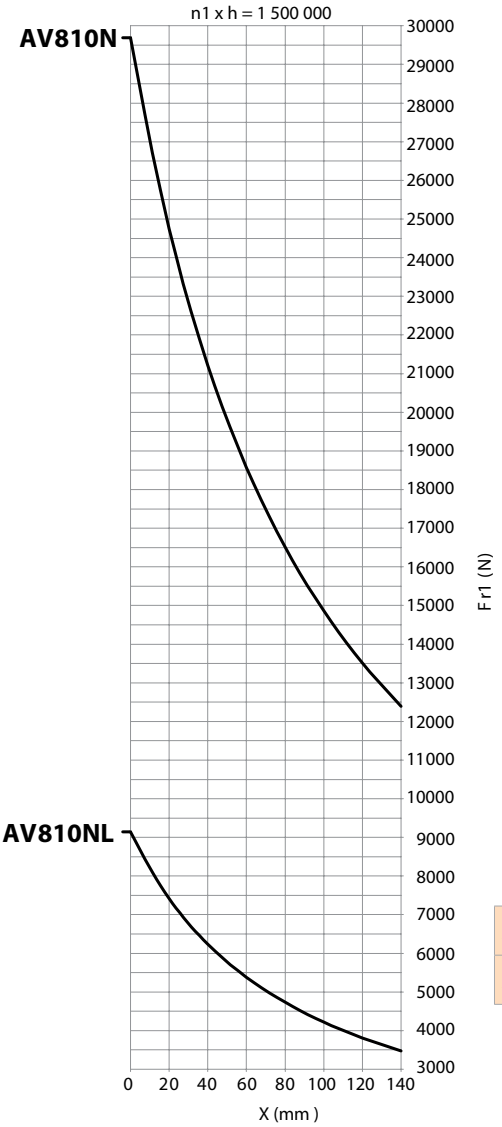

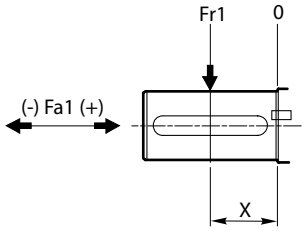

	n1 x h = 1 500 000 Fa1 max (Fr1 = 0)	
	Fa1 (+)	Fa1 (-)
AV810NL	14 800	14 800
AV810N	25 900	25 900

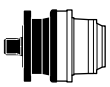

	A	B
RE 811-1021-2522-3002-3512-8003-8003L	195.5	—
GB 12013-12013L-16003L-26004-31004-40004-85005-110005	195.5	—
RE 2521-3001-8002-8002L	—	278
GB 12012-12012L-26003-31003-40003-85004-110004-205005-235005	—	278
CC600	162.5	—
CC1000	162.5	—

AVF-AV810T-TL

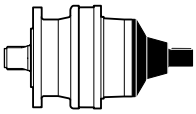

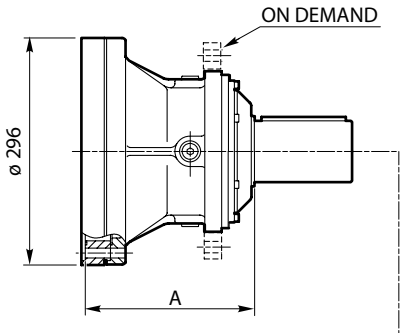

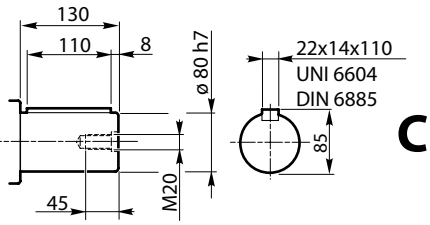

C

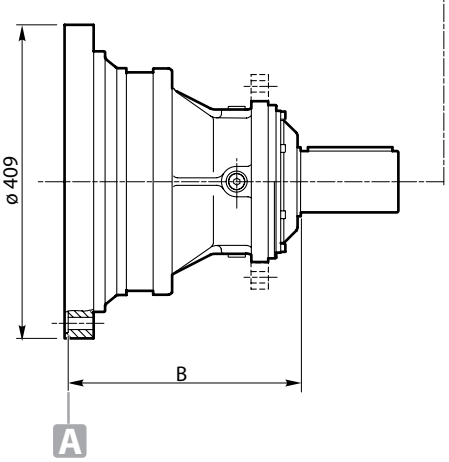

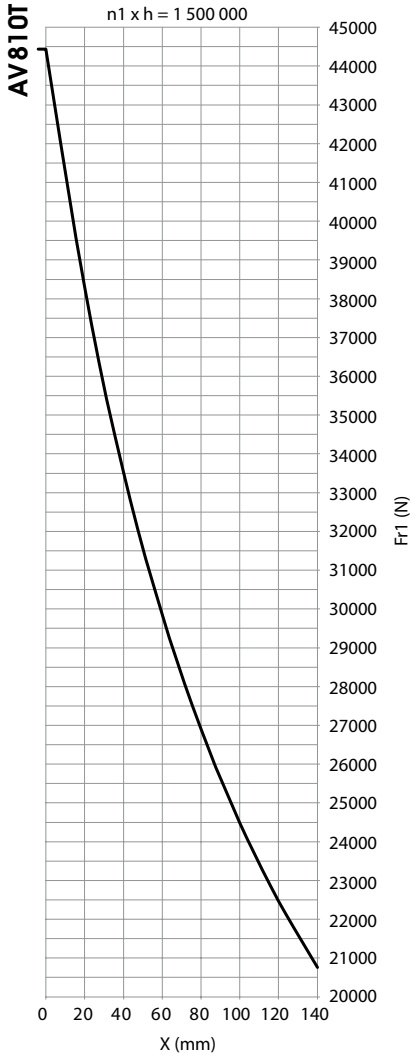

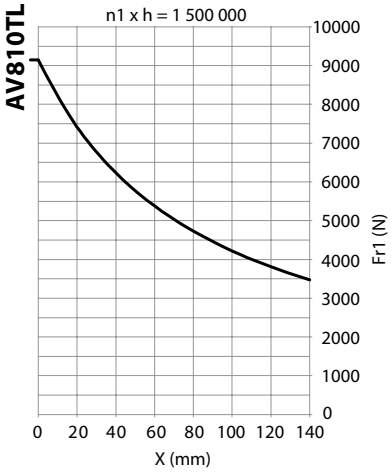

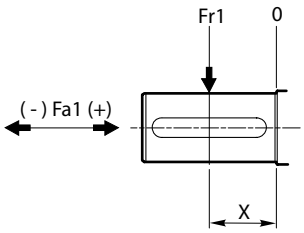

	n1 x h = 1 500 000 Fa1 max (Fr1 = 0)	
	Fa1 (+)	Fa1 (-)
AV810T	39 200	25 900

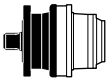

	A	B
RE 811-1021-2522-3002-3512-8003-8003L	218	—
GB 12013-12013L-16003L-26004-31004-40004-85005-110005	218	—
RE 2521-3001-8002-8002L	—	296
GB 12012-12012L-26003-31003-40003-85004-110004-205005-235005	—	296
CC600	185	—
CC1000	185	—

AVF-AV1020T-TL

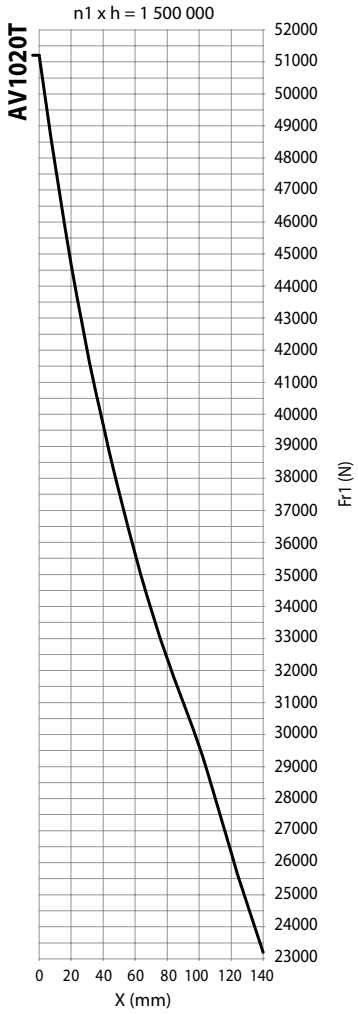

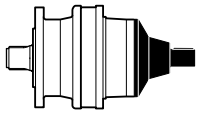

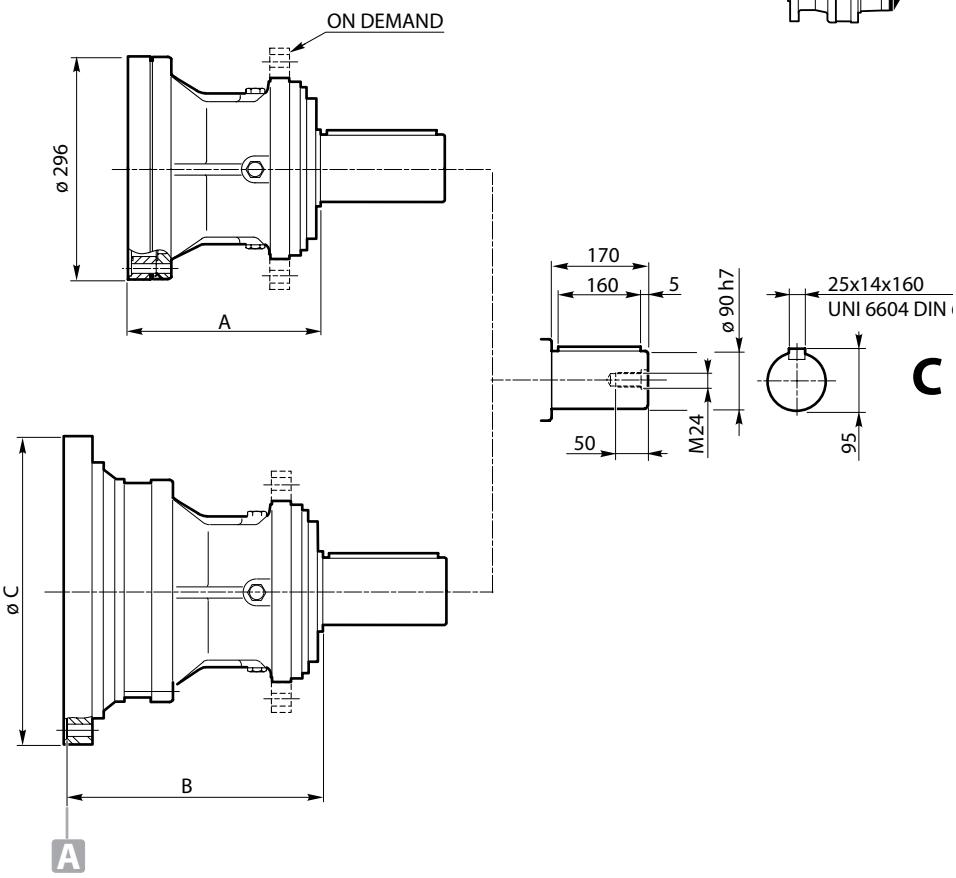

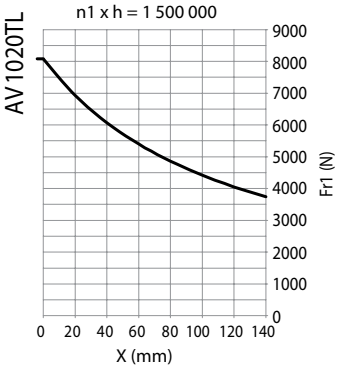

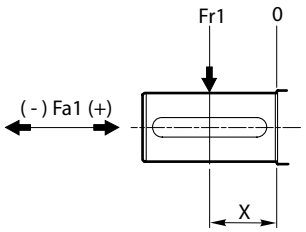

	n1 x h = 1 500 000 Fa1 max (Fr1 = 0)	
	Fa1 (+)	Fa1 (-)
AV1020T	46 450	26 850

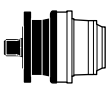

	A	B	C
RE 811-1021-2522-3002-3512-8003-8003L	249	—	—
GB 12013-12013L-16003L-26004-31004-40004-85005-110005	249	—	—
RE 2521-3001-8002-8002L	—	327	409
GB 12012-12012L-26003-31003-40003-85004-110004	—	327	409
RE 3511-4801	—	348	452
GB 16002-16002L-45003-130004	—	348	452
CC1000	216	—	—

AVF-AV1520T

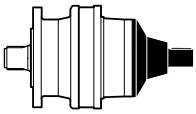

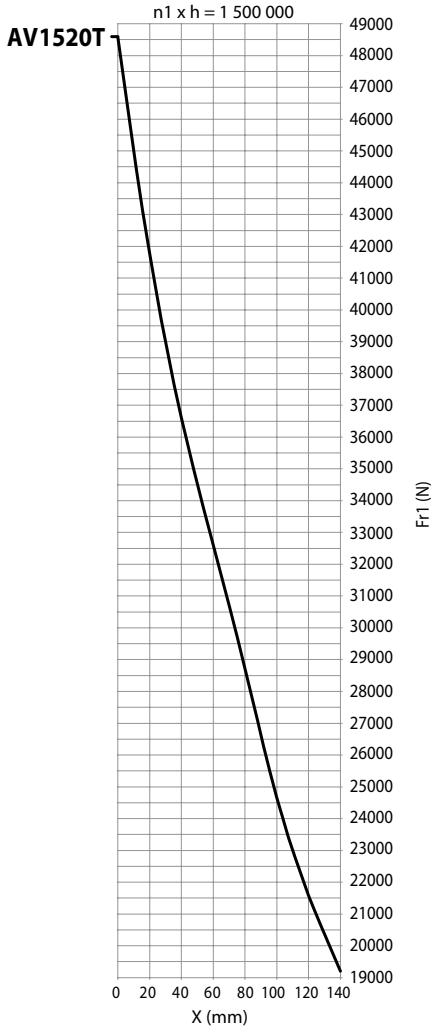

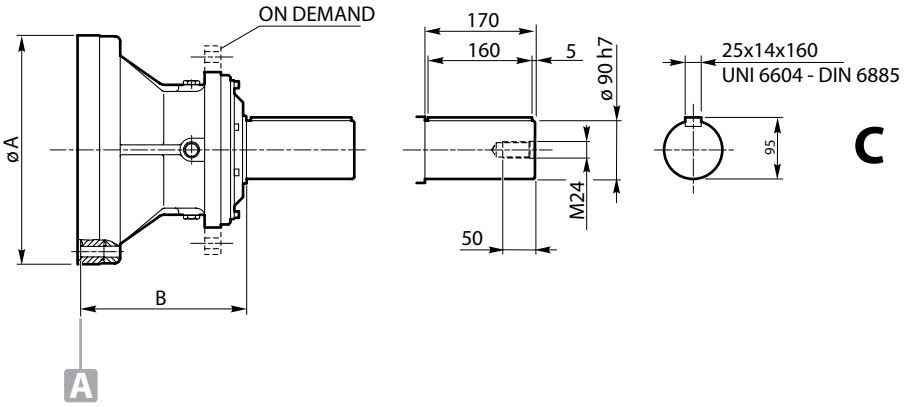

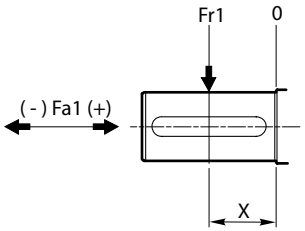

	n1 x h = 1 500 000 Fa1 max (Fr1 = 0)	
	Fa1 (+)	Fa1 (-)
AV1520T	26 000	8 500

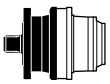

	A	B
RE 1521-2001-6002-6002L	353	252
GB 21003-45004-53004-61004-130005	353	252
RE 6001	490	321
GB 21002-53003-61003-150004	490	321

AV2520H-HL

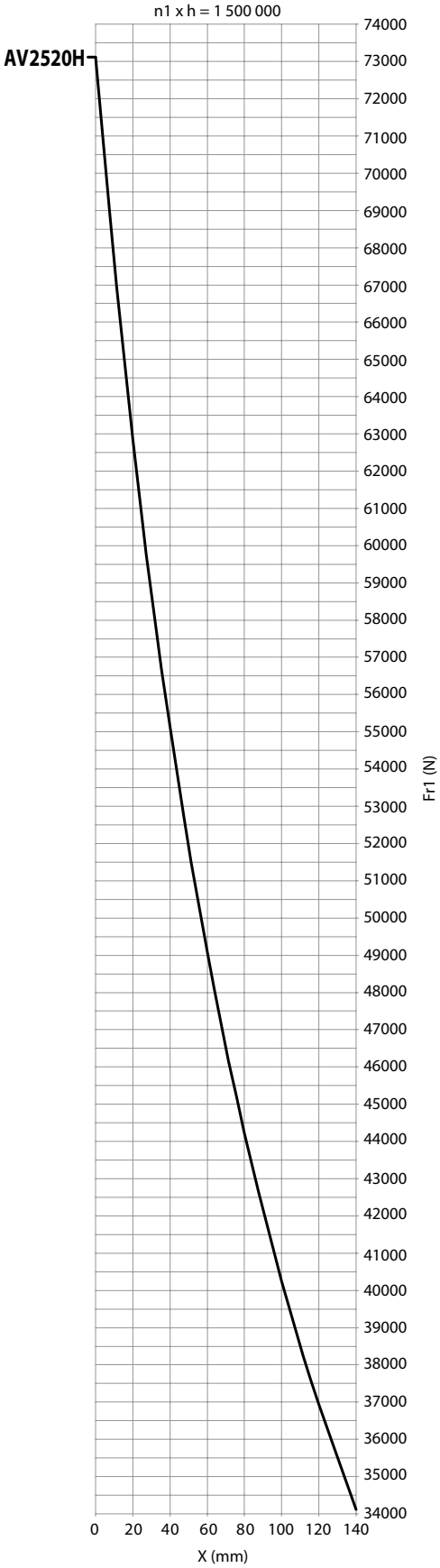

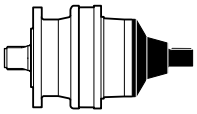

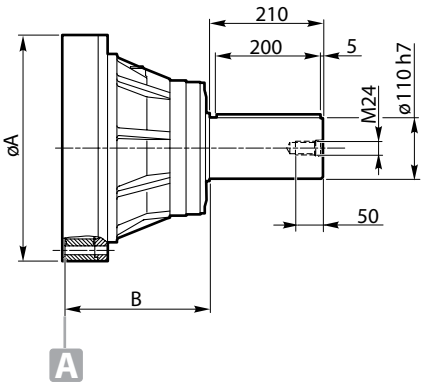

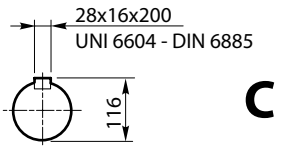

	n1 x h = 1 500 000 Fa1 max (Fr1 = 0)	
	Fa1 (+)	Fa1 (-)
AV2520H	66 000	50 000
AV2520HL	29 700	29 700

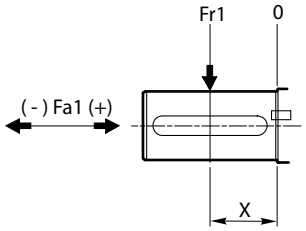

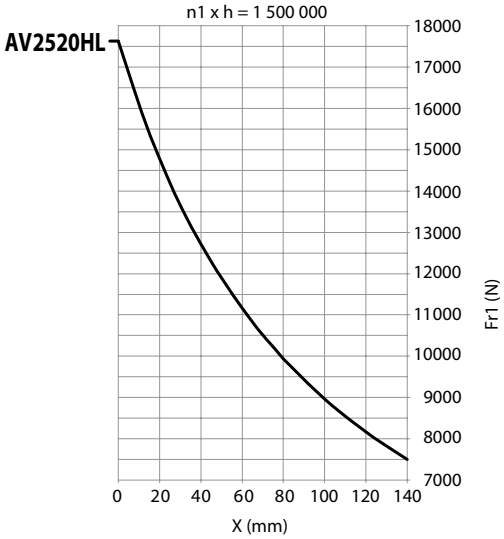

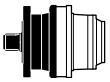

	A	B
RE 2521-3001-8002-8002L	409	257
GB 12012-12012L--26003-31003-40003 GB 85004-110004-205005-235005	409	257
RE 3511-4801	452	320
GB 16002-16002L-45003-130004	452	320
RE 6001	490	293
GB 21002-53003-61003-150004	490	293
RE 8001	490	385
GB 26002-85003	490	385
GB 12011-16001-31002-40002-45002-110003 GB 130003-205004-235004	368	610

AV80

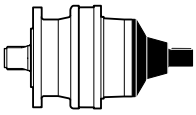

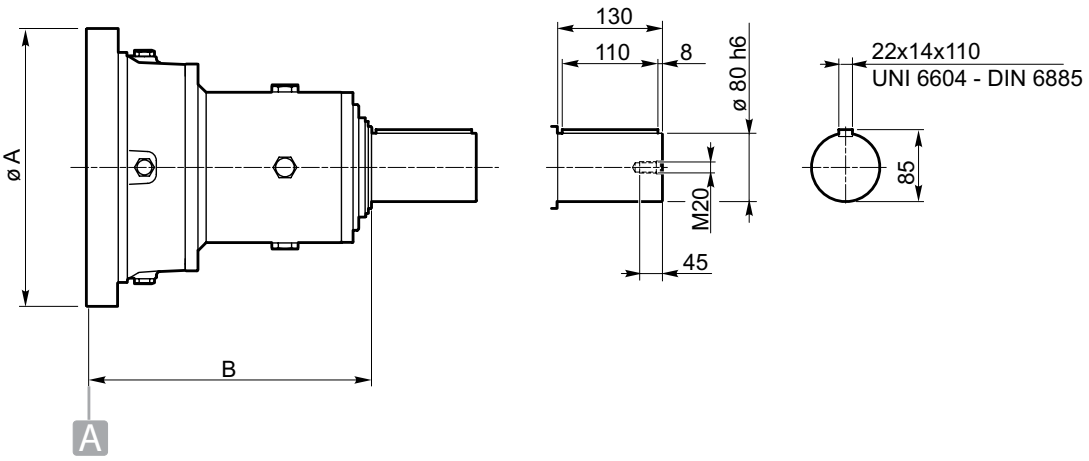

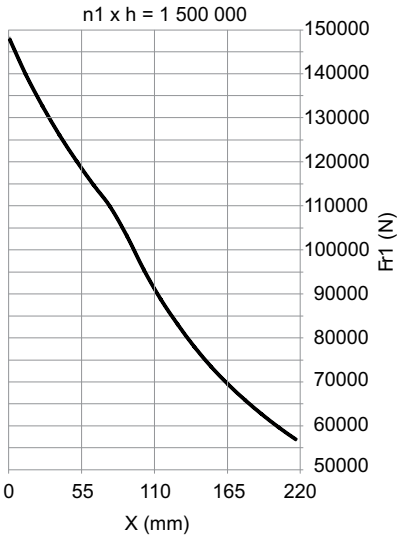

	n1 x h = 1 500 000 Fa1 max (Fr1 = 0)	
	Fa1 (+)	Fa1 (-)
AV80	31 700	31 700

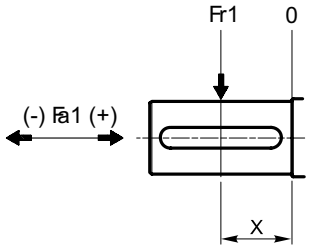

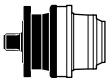

	A	B
RE 811-1021-2522-3002-3512-80003-8003L	295	187.5
GB 12013-12013L-16003L-260004-31004-40004-85005-110005	295	187.5
RE 2521-3001-8002-8002L	409	298
GB 12012-12012L-26003-31003-40003-85004-110004-205003	409	298

AV100

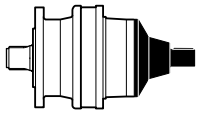

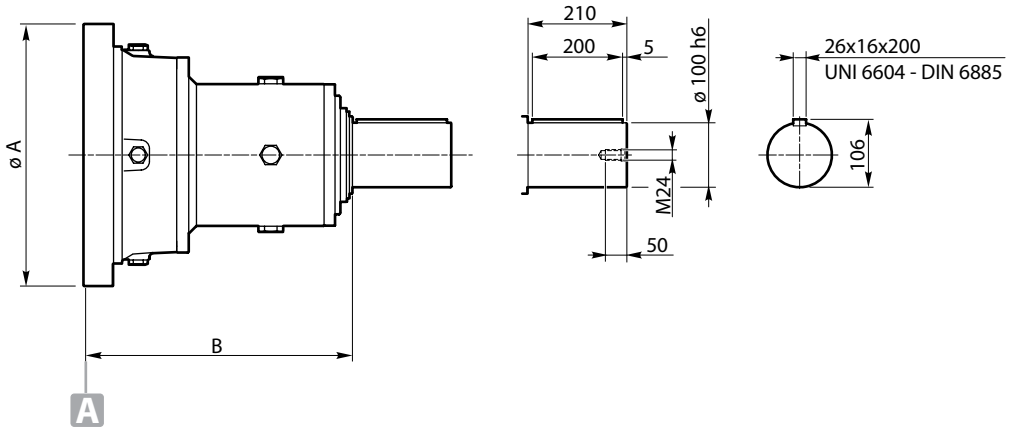

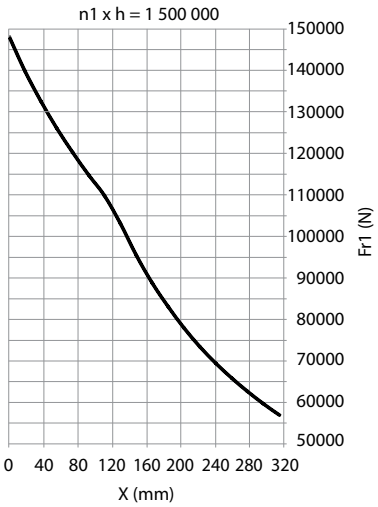

	n1 x h = 1 500 000 Fa1 max (Fr1 = 0)	
	Fa1 (+)	Fa1 (-)
AV100	52 000	-

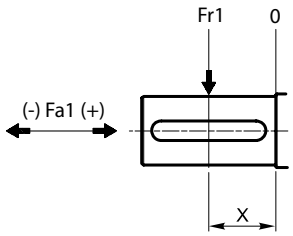

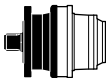

	A	B
RE 3511-4801	452	464.5
GB 16002-45003-130004	452	464.5
RE 6001-8001	490	437
GB 21002-26002-53003-61003-85003-150004	490	437
GB 12011-16001	610	550
GB 31002-40002-45002-110003-130003-150003-205004-235004	610	550

AV150

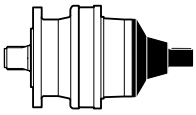

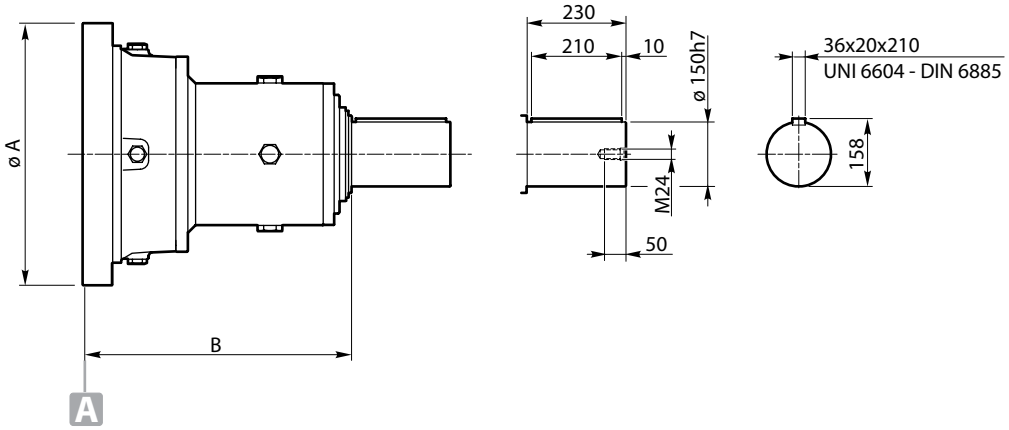

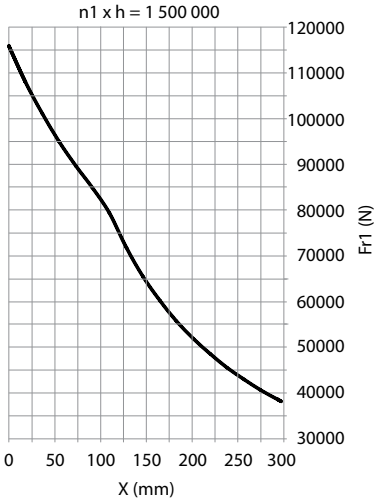

	n1 x h = 1 500 000 Fa1 max (Fr1 = 0)	
	Fa1 (+)	Fa1 (-)
AV150	63 000	-

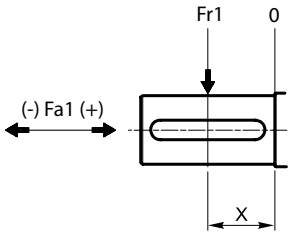

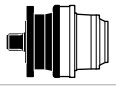

	A	B
RE 6001-8001	490	634
GB 21002-26002-53003-61003-150004	490	634
GB 12011-16001	610	626
GB 31002-40002-45002-110003-130003-15000-205004-235004	610	626

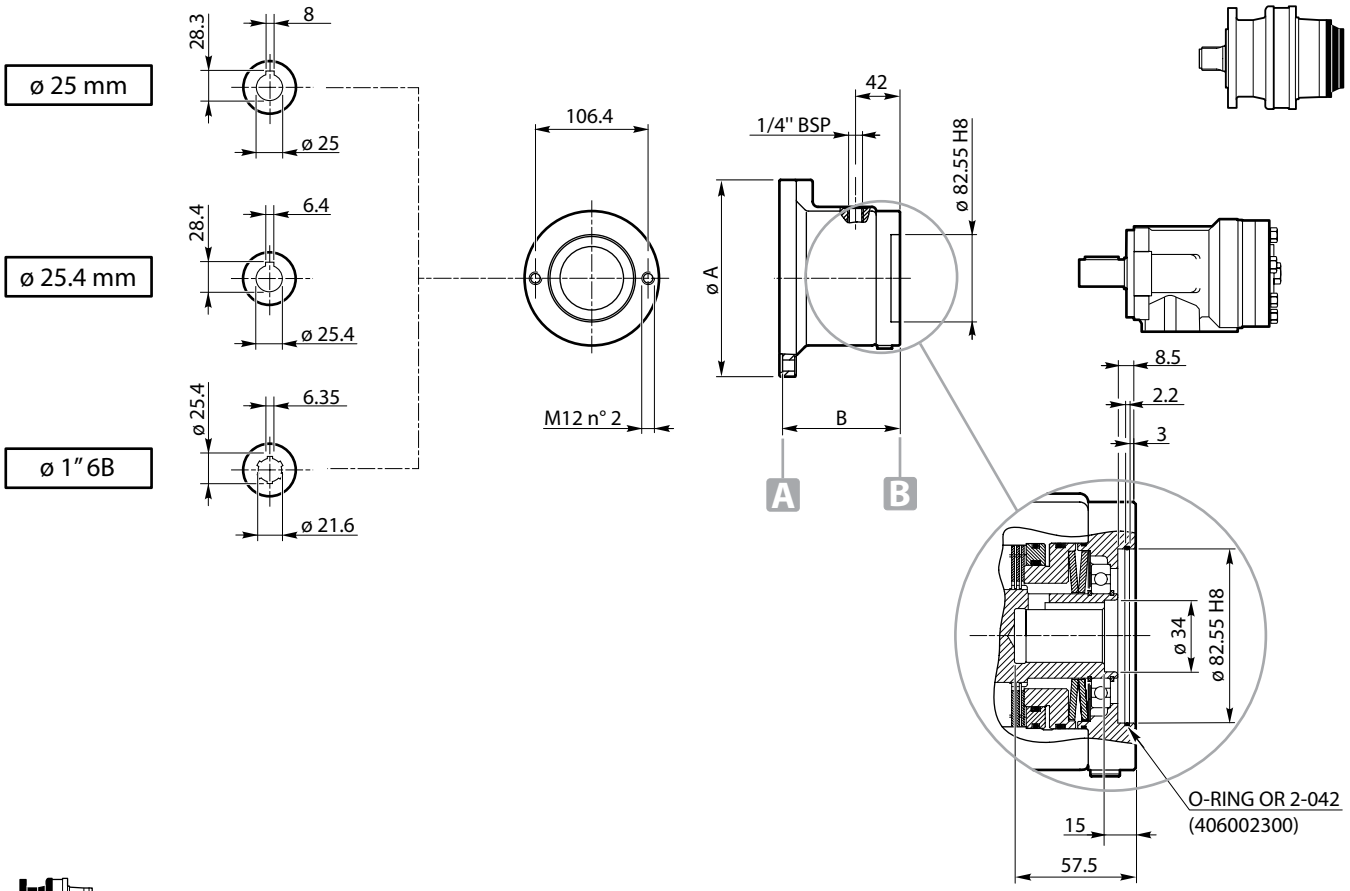

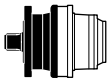

	ø A	B		F 01	F 10	F 11	F 12	F 13	F 14	F 05	F 16	
RE 111 - 112 - 113 - 114 **RE 211 - 212 - 213 - 214** **RE 241 - 242 - 243 - 244** **RE 312 - 313 - 314** **RE 512 - 513 - 514** **RE 613 - 614** **RE 813 - 814** **RE 1023 - 1024** **RE 1523 - 1524** **RE 2004** **RE 2524** **RE 3004** **RE 3514-4804** **RE 6004L** **RE 8005 - 8005L** **GB 12015 - 12015L** **GB 16005 - 16005L** **CC30-CC120**	186	109.5	**Tb** (Nm)	132	133	182	235	332	468	530	608	±5%
			pb (bar)	23	29	34	26	30	36	39	42	
			p max (bar)	300								
			n1 max (RPM)	700								

	ø A	B		F 02	F 20	F 21	F 22	F 23	F 24	F 25	F 26	
RE 311-511 **RE 611 - 612** **RE 812-1022** **RE 1522-2003** **RE 2523-3003** **RE 3513-4803** **RE 6003 - 6003L** **RE 6004 - 6004L** **RE 8004 - 8004L** **GB 12014 - 12014L** **GB 16004 - 16004L** **GB 21004 - 21005** **GB 26005-31005** **GB 40005-45005** **GB 53005** **CC350**	244	118.5	**Tb** (Nm)	132	133	182	235	332	468	530	608	±5%
			pb (bar)	23	29	34	26	30	36	39	42	
			p max (bar)	300								
			n1 max (RPM)	700								

F5-F6

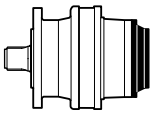

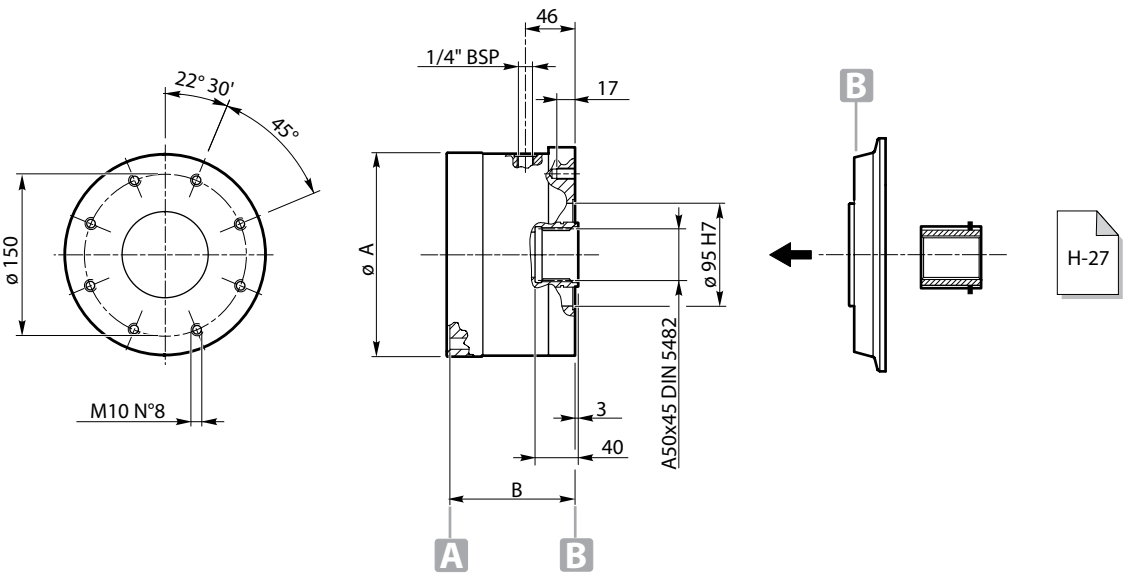

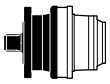

	ø A	B		F 501	F 502	F 503	F504	F505	F506	F 508	
RE 111 - 112 - 113 - 114 **RE 211 - 212 - 213 - 214** **RE 241 - 242 - 243 - 244** **RE 312 - 313 - 314** **RE 512 - 513 - 514** **RE 613 - 614** **RE 813 - 814** **RE 1023 - 1024** **RE 1523 - 1524** **RE 2004** **RE 2524** **RE 3004** **RE 3514-4804** **RE 6004L** **RE 8005 - 8005L** **GB 12015 - 12015L** **GB 16005 - 16005L** **CC30** **CC120**	186	115	**Tb** (Nm)	110	215	325	405	500	630	818	±5%
			pb (bar)	10	20	30	38	28	35	33	
			p max (bar)	300							
			n1 max (RPM)	1500 (standard)							
				3500 (special)							

	ø A	B		F 601	F 602	F 603	F604	F 605	F 606	F608	F610	F612	
RE 311-511 **RE 611 - 612** **RE 812-1022** **RE 1522-2003** **RE 2523-3003** **RE 3513-4803** **RE 6003 - 6003L** **RE 6004 - 6004L** **RE 8004 - 8004L** **GB 12014 - 12014L** **GB 16004 - 16004L** **GB 21004 - 21005** **GB 26005-31005** **GB 40005-45005** **GB 53005** **CC350**	244	125	**Tb** (Nm)	110	215	325	405	500	630	818	1005	1150	±5%
			pb (bar)	10	20	30	38	28	35	33	40	40	
			p max (bar)	300									
			n1 max (RPM)	1500 (standard)									
				3500 (special)									

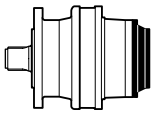

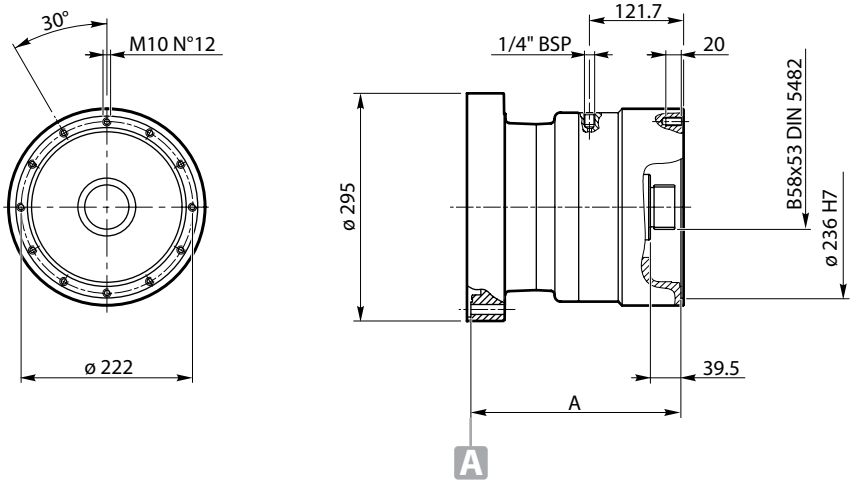

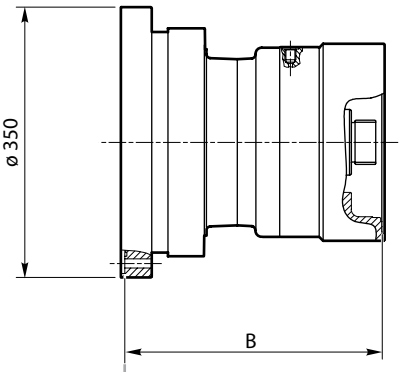

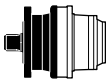

	A	B		F 813	F 815	F 818	F 820	F 823	F 827	F 830	
RE 811	272.5	-	**Tb** (Nm)	1271	1525	1780	2034	2288	2670	3051	±5%
RE 1021	272.5	-									
RE 1521-2001	-	314.5									
RE 2522-3002	272.5	-									
RE 3512-4801	272.5	-									
RE 6002-6002L	-	314.5	**pb** (bar)	54	65	76	58	65	76	87	
RE 8003-8003L	272.5	-									
GB 12013-12013L	272.5	-									
GB 16003L	-	314.5									
GB 16003	-	314.5									
GB 21003	272.5	-									
GB 26004	272.5	-									
GB 31004	272.5	-	**p max** (bar)	300							
GB 40004	-	314.5									
GB 45004	-	314.5									
GB 53004	-	314.5									
GB 61004	272.5	-									
GB 85005	272.5	-									
GB 110005	-	314.5	**n1 max** (RPM)	1500 (standard)							
GB 130005	-	314.5									
GB 150005	272.5	-									
CC600	272.5	-		3500 (special)							
CC1000	292.5	-									
	292.5	-									

F8-MU

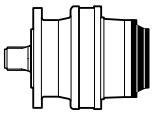

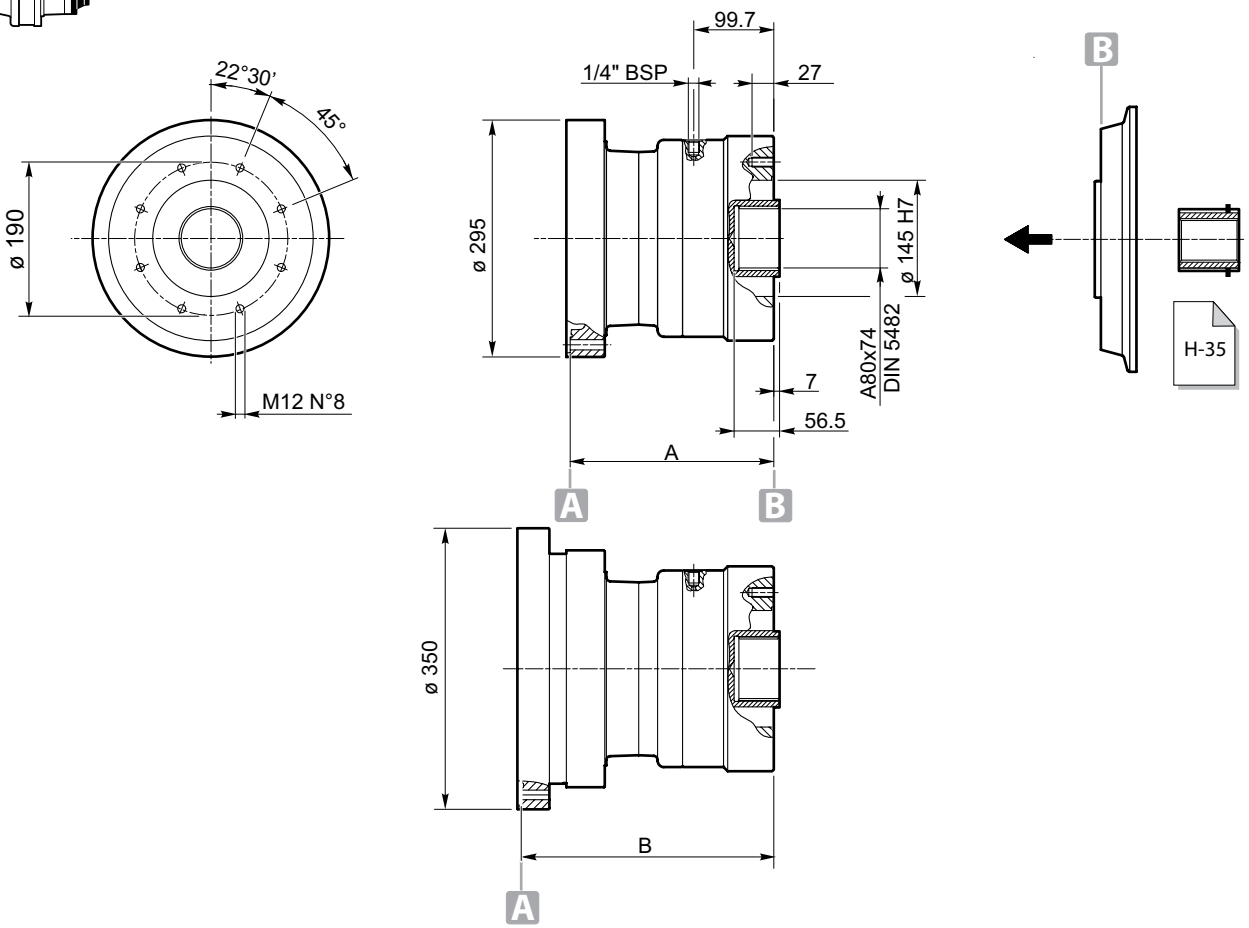

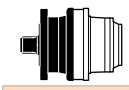

	A	B		F 813	F 815	F 818	F 820	F 823	F 827	F 830	
	253.5	-									
RE 811	253.5	-									
RE 1021	-	314.5	**Tb** (Nm)	1271	1525	1780	2034	2288	2670	3051	
RE 1521-2001	253.5	-									
RE 2522-3002	253.5	-									
RE 3512-4801	-	314.5									
RE 6002-6002L	253.5	-									
RE 8003-8003L	253.5	-									
GB 12013-12013L	253.5	-	**pb** (bar)	54	65	76	58	65	76	87	
GB 16003L	-	314.5									
GB 16003	-	314.5									
GB 21003	253.5	-									
GB 26004	253.5	-									±5%
GB 31004	253.5	-									
GB 40004	-	314.5	**p max** (bar)	300							
GB 45004	-	314.5									
GB 53004	-	314.5									
GB 61004	253.5	-									
GB 85005	253.5	-									
GB 110005	-	314.5									
GB 130005	-	314.5	**n1 max** (RPM)	1500 (standard)							
GB 150005	253.5	-									
CC600	253.5	-		3500 (special)							
CC1000	253.5	-									
	253.5	-									

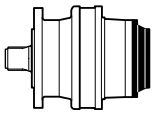

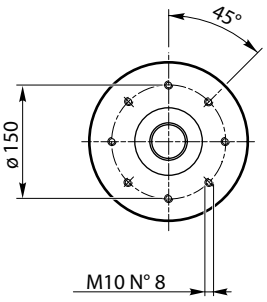

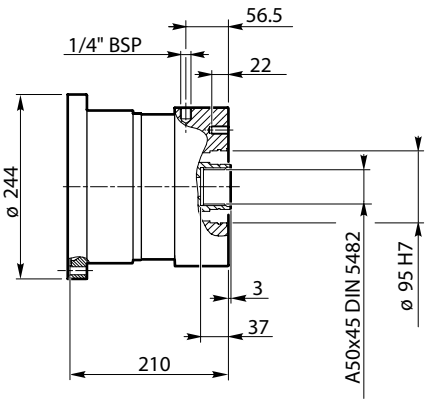

ST

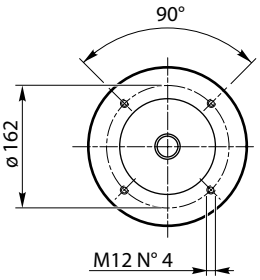

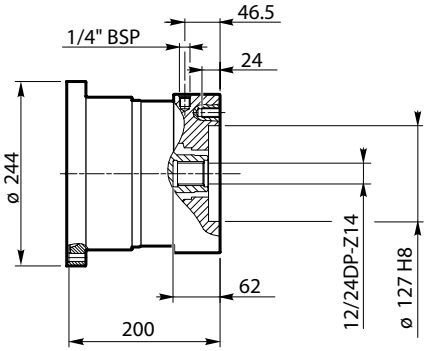

SAE "C"

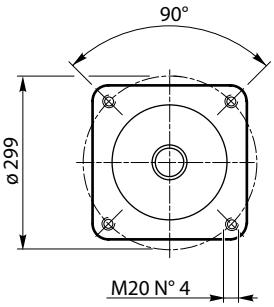

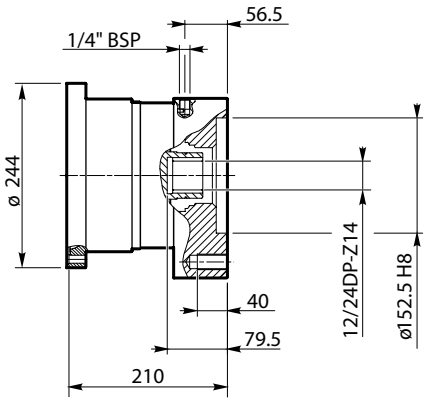

SAE "D"

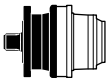

		F 902	F 903	F 904	F 905	F 906	F 908	F 910	F 912	F 915	
RE 311-511 **RE 611 - 612** **RE 812-1022** **RE 1522-2003** **RE 2523-3003** **RE 3513-4803** **RE 6003 - 6003L** **RE 6004 - 6004L** **RE 8004 - 8004L** **GB 12014 - 12014L** **GB 16004 - 16004L** **GB 21004 - 21005** **GB 26005-31005** **GB 40005-45005** **GB 53005** **CC350**	**Tb** (Nm)	244	317	439	488	683	854	976	1120	1465	±5%
	pb (bar)	16	21	20	16	23	23	26	32	39	
	p max (bar)	300									
	n1 max (RPM)	1500 (standard)									
		3500 (special)									

Upon request, brakes up to size F912 can be equipped with freewheeling clutch.

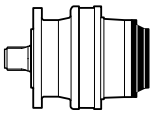

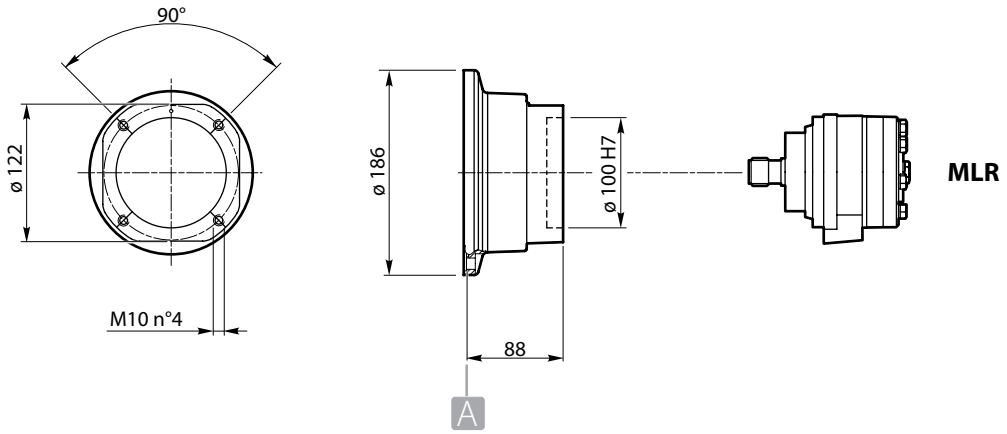

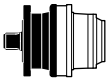

		20	30	40	45	
RE 111 - 112 - 113 - 114 **RE 211 - 212 - 213 - 214** **RE 241 - 242 - 243 - 244** **RE 312 - 313 - 314** **RE 512 - 513 - 514** **RE 613 - 614** **RE 813 - 814** **RE 1023 - 1024** **RE 1523 - 1524** **RE 2004** **RE 2524** **RE 3004** **RE 3514-4804** **RE 6004L** **RE 8005 - 8005L** **GB 12015 - 12015L** **GB 16005 - 16005L**	**Tb** **(Nm)**	220	308	396	459	+5%
	pb **(bar)**	24	24	24	26	
	p max **(bar)**	150				
	n1 max **(RPM)**	700				

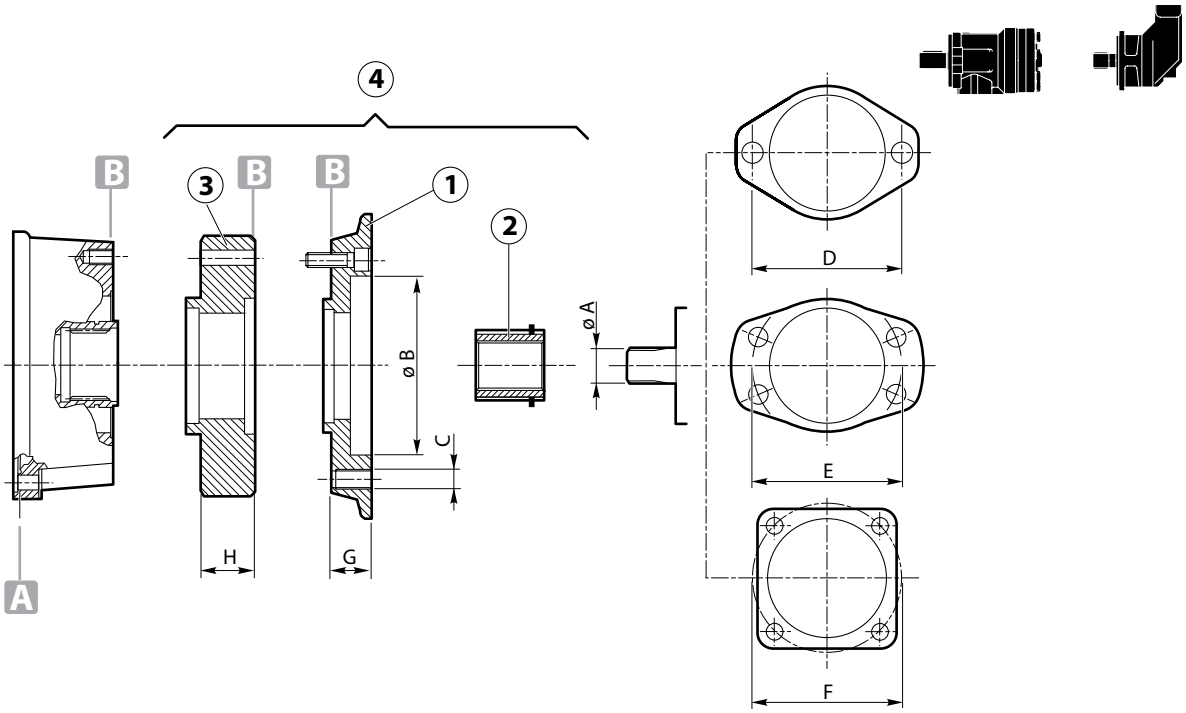

AXIAL PUMP	øA	øB	øC	øD	E	F	G	H	1	2	3	4
M1 15-21	ø 19	82.55	M12	106.4	—	—	26	—	20300047	40000659	—	AQ
M2 24-50	16/32-13	101.6	M14	146	—	—	20	—	40000635	40000657	—	AZ
M2 24-50	16/32-15	101.6	M14	146	—	—	20	—	40000635	40000671	—	BB
M3 40-65	16/32-13	101.6	M14	146	—	—	20	—	40000635	40000657	—	AZ
M3 40-65	16/32-15	101.6	M14	146	—	—	20	—	40000635	40000671	—	BB

DANFOSS	øA	øB	øC	øD	E	F	G	H	1	2	3	4
OMM	ø 16	63	M8	80	—	—	14	—	40000698	40000694	—	CE
OMP 25-400	ø 25	82.55	M12	106.4	—	—	26	—	20300047	40000649	—	AN
OMP 25-400	ø 25.4	82.55	M12	106.4	—	—	26	—	20300047	40000645	—	AI
OMP 25-400	1" B6	82.55	M12	106.4	—	—	26	—	20300047	40000648	—	AM
OMP 25-400	ø 32	82.55	M12	106.4	—	—	38	—	2511001	40000665	—	AD
OMR 50-375	ø 25	82.55	M12	106.4	—	—	26	—	20300047	40000649	—	AN
OMR 50-375	ø 25.4	82.55	M12	106.4	—	—	26	—	20300047	40000645	—	AI
OMR 50-375	1" B6	82.55	M12	106.4	—	—	26	—	20300047	40000648	—	AM
OMR 50-375	ø 32	82.55	M12	106.4	—	—	38	—	02511001	40000665	—	AD
OMH 200-500	ø 32	82.55	M12	106.4	—	—	38	—	02511001	40000665	—	AD
OMH 200-500	12/24-14	82.55	M12	106.4	—	—	38	—	02511001	40000672	—	AE
OMS 80-400	ø 31.75	82.55	M12	1064	—	—	38	—	02511001	40000664	—	UL
OMS 80-400	ø 32	82.55	M12	106.4	—	—	38	—	02511001	40000665	—	AD
OMS 80-400	12/24-14	82.55	M12	106.4	—	—	38	—	02511001	40000672	—	AE
OMS 80-400 SPEC.	12/24-14	82.55	M10	106.4			30		40000681	40000672		CV
OMSS 80-400	12/24-12	100	M10	—	—	125	21	—	02511017	02241030	—	TR
OMTS 160-500	12/24-16	125	M12	160			42		02511081	02241082		UR
OMT 160-500	12/24-17	125	M12	—	—	160	86	—	40001833	40000674	—	CI
OMT 160-500	ø 40	125	M12	—	—	160	78	—	02511041	02241051	—	TW
OMT 160-500(US)	12/24-17	127	M12			150	79.5		02511166	40000674		DF
OMV 315-800	Ø50	160	M16			200	140		02511006	02591003		VM
OMVS 315-800	10/20-16	125	M12	—	—	160	42	—	02511085	02241086	—	US
MTM	12/24-17	127	M12	—	—	162	29	38	02511108	40000674	02731111	UY

EATON (CHAR-LYNN)	øA	øB	øC	øD	E	F	G	H	1	2	3	4
SERIE 2000	ø 25	82.55	M12	106.4	—	—	26	—	20300047	40000649	—	AN
SERIE 2000	Ø25	82.55	M12		106.4		26		40000680	40000649		BN
SERIE 2000	ø 25.4	82.55	M12	106.4	—	—	26	—	20300047	40000645	—	AI
SERIE 2000	ø 31.75	82.55	M12	106.4	—	—	26	—	20300047	40000664	—	AR
SERIE 2000	ø 32	82.55	M12	106.4	—	—	38	—	2511001	40000665	—	AD
SERIE 2000	1"6B	82.55	M12	106,4	—	—	26	—	20300047	40000648	—	AM
SERIE 2000	12/24-14	82.55	M12	106.4	—	—	26	—	20300047	40000672	—	AU
SERIE 4000	12/24-14	101.6	M12			127	20		40000635	40000672		EH
SERIE 4000	12/24-17	127	M12	—	—	162	29	—	02511108	40000674	—	BH
SERIE 6000	12/24-17	127	M12	—	—	162	29	14	02511108	02971179	02731096	CQ
SERIE 6000	ø 40	127	M12	—	—	162	29	38	02511108	02241057	02731111	TV
SERIE 6000	8.5/17	127	M12	—	—	162	29	38	02511108	02241076	02731111	UH

HP HYDRAULIC	øA	øB	øC	øD	E	F	G	H	1	2	3	4
M4PV21-28	ø 25.4	101.6	M14	146	—	—	20	—	40000635	40000645	—	AV
M4PV21-28	16/32-13	101.6	M14	146	—	—	20	—	40000635	40000657	—	AZ
M4PV21-28	16/32-15	101.6	M14	146	—	—	20	—	40000635	40000671	—	BB
M4MF 21-28	ø 25.4	82.55	M12	106.4	—	—	26	—	20300047	40000645	—	AI
M4MF 21-28	16/32- 1 3	82.55	M12	106.4	—	—	26	—	20300047	40000657	—	AP
M4MF 21-28	16/32-15	82.55	M12	106.4	—	—	26	—	20300047	40000671	—	AT
M4PV 34-65	ø 25.4	101.6	M14	146	—	—	20	—	40000635	40000645	—	AV
M4PV 34-65	16/32-13	101.6	M14	146	—	—	20	—	40000635	40000657	—	AZ
M4PV 34-65	16/32-15	101.6	M14	146	—	—	20	—	40000635	40000671	—	BB
M4MF 34-65	ø 25.4	101.6	M14	146	—	—	20	—	40000635	40000645	—	AV
M4MF 34-65	16/32-13	101.6	M14	146	—	—	20	—	40000635	40000657	—	AZ
M4MF 34-65	16/32-15	101.6	M14	146	—	—	20	—	40000635	40000671	—	BB
M4MV 34-65	ø 25.4	101.6	M14	146	—	—	20	—	40000635	40000645	—	AV
M4MV 34-65	16/32-13	101.6	M14	146	—	—	20	—	40000635	40000657	—	AZ
M4MV 34-65	16/32-15	101.6	M14	146	—	—	20	—	40000635	40000671	—	BB

LINDE	øA	øB	øC	øD	E	F	G	H	1	2	3	4
HMF 35	16/32-15	101.6	M14	146	—	—	20	—	40000635	40000671	—	BB
HMF 50-75	16/32-21	127	M16	181	—	—	34	—	02511108	40000654	—	CF
HMF 105	16/32-23	127	M16	181	—	—	34	—	40001811	40000686	—	CH
HMF 135	16/32-27	152.4	M20	228.5	—	—	35	—	40001844	02241123	—	CZ
HMR 135	16/32-27	152.4	M20	228.5	—	—	35	—	40001844	02241123	—	CZ
BPV 70	W35x2	127	M12	162	—	—	25	—	02511108	40000670	—	VK

M + S	øA	øB	øC	øD	E	F	G	H	1	2	3	4
EPMM 8-50	ø 14	63	M8	80	—	—	14	—	40000698	40000658	—	CD
EPM M 8-50	ø 16	63	M8	80	—	—	14	—	40000698	40000694	—	CE
EPM 40-630	ø 25	82.55	M12	106.4	—	—	26	—	20300047	40000649	—	AN
EPM 40-630	ø 25.4	82.55	M12	106.4	—	—	26	—	20300047	40000645	—	AI
EPM 40-630	1" 6B	82.55	M12	106.4	—	—	26	—	20300047	40000648	—	AM
EPM 40-630	25/22-14	82.55	M12	106.4	—	—	26	—	20300047	40000647	—	AL
EPM 40-630	12/24-14	82.55	M12	106.4	—	—	38	—	2511001	40000672	—	AE
EPM 40-630	ø 32	82.55	M12	106.4	—	—	38	—	2511001	40000665	—	AD
EPRM 50-400	ø 25	82.55	M12	106.4	—	—	26	—	20300047	40000649	—	AN
EPRM 50-400	ø 25.4	82.55	M12	106.4	—	—	26	—	20300047	40000645	—	AI
EPRM 50-400	1" 6B	82.55	M12	106.4	—	—	26	—	20300047	40000648	—	AM
EPRM 50-400	25/22-14	82.55	M12	106.4	—	—	26	—	20300047	40000647	—	AL
EPRM 50-400	12/24-14	82.55	M12	106.4	—	—	38	—	2511001	40000672	—	AE
EPRM 50-400	ø 32	82.55	M12	106.4	—	—	38	—	2511001	40000665	—	AD
EPMS 80-400	ø 31.75	82.55	M12	106.4	—	—	38	—	2511001	40000664	—	AG
EPMS 80-400	ø 32	82.55	M12	106.4	—	—	38	—	2511001	40000665	—	AD
EPMS 80-400	12/24-17	82.55	M12	106.4	—	—	38	—	2511001	40000674	—	AF
EPMT 160-500	12/24-17	125	M12	—	—	160	86	—	40001833	40000674	—	CI
MTS 250	12/24-16	125	M12	160			42		02511081	02241082		UR

REXROTH	øA	øB	øC	øD	E	F	G	H	1	2	3	4
A2FE 45	W30x2	160	M16	200			107.5		02511250	40000669		ER
A2FE 56	W30x2	160	M16	200			107.5		02511250	40000669		ER
A2FE 80	W35x3	190	M20	224			133		02511281	40000670		ES
A2FM 10-16	ø 25	80	M8	—	—	100	36.5	—	40001842	40000649	—	CL
A2FM 10-16	W25x1.25	80	M8	—	—	100	36.5	—	40001842	40000668	—	CM
A2FM 23-32	ø 25	100	M10	—	—	125	48	—	40000682	40000649	—	BS
A2FM 23-32	W25X1.25	100	M10	—	—	125	48	—	40000682	40000668	—	BT
A2FM 23-32	W30x2	100	M10	—	—	125	48	—	40000682	40000669	—	BU
A2FM 45-63	W30x2	125	M12	—	—	160	44	—	40000684	40000669	—	CA
A2FM 45-63	W35x2	125	M12	—	—	160	44	—	40000684	40000670	—	CB
A2FM 80-90	W35x2	140	M12	—	—	180	53	—	40001852	40000670	—	CN
A2FM 80-90	W40x2	140	M12	—	—	180	53	—	40001852	40001858	—	CP
A2FM 107	W40x2	160	M16	—	—	200	56.5	—	02511039	40001858	—	TP
A2FM 125	W40x2	160	M16	—	—	200	56.5	—	02511039	40001858	—	TP
A2FM 160	W50x2	180	M16	—	—	224	62	—	02511109	02591102	—	CT
A2FM 200	W50x2	200	M20	—	—	250	73	—	02511232	02591102	—	DB
A4FM 22-28	16/32-13	101.6	M14	146	—	—	20	—	40000635	40000657	—	AZ
A4FM 22-28	16/32-15	101.6	M14	146	—	—	20	—	40000635	40000671	—	BB
A4FM 40	W30x2	101.6	M14	146	—	—	20	—	40000635	40000669	—	BA
A4FM 56	W30x2	127	M16	181	—	—	34	—	40001811	40000669	—	CG
A10FM 23-28	16/32-13	101.6	M14	146	—	—	20	—	40000635	40000657	—	AZ
A10FM 37-45	16/32-15	101.6	M14	146	—	—	20	—	40000635	40000671	—	BB
A6VM 28	W25x1.25	100	M10	—	—	125	48	—	40000682	40000668	—	BT
A6VM 28	W30x2	100	M10	—	—	125	48	—	40000682	40000669	—	BU
A6VM 55	W30x2	125	M12	—	—	160	44	—	40000684	40000669	—	CA
A6VM 55	W35x2	125	M12	—	—	160	44	—	40000684	40000670	—	CB
A6VM 80	W35x2	140	M12	—	—	180	53	—	40001818	40000670	—	CN
A6VM 80	W40x2	140	M12	—	—	180	53	—	40001818	40001858	—	CP
A6VM 107	W45x2	160	M16	—	—	200	56.5	—	02511039	02591073	—	VN
A6VM 140	W45x2	180	M16	—	—	224	62	—	02511109	02591073	—	VQ
A6VM 160	W45x2	180	M16	—	—	224	62	—	02511109	02591073	—	VQ
A6VM 160	W50x2	180	M16	—	—	224	62	—	02511109	02591102	—	CT
A6VM 250	W50x2	200	M20	—	—	250	73	—	02511232	02591102	—	DB
AA6VM 55, 80	12/24-12	127	M14	—	—	162	29	—	02511108	40000672	—	BG
AA6VM 107, 160	8/16-13	152.4	M20	—	—	228.5	41	—	40001844	02241043	—	UX
AA2FM 10, 12, 16	16/32-13	101.6	M14	146	—	—	20	—	40000635	40000657	—	AZ
AA2FM 23, 28, 32	12/24-12	127	M14	—	—	—	29	—	02511108	40000672	—	BG
AA2FM 45, 56 ,63	12/24-12	127	M14	—	—	162	29	—	02511108	40000672	—	BG
AA2FM 80, 90	12/24-12	127	M14	—	—	162	29	—	02511108	40000672	—	BG
AA2FM 56 ,63	16/32-21	127	M14	—	—	162	29	—	02511108	40000654	—	BD
AA2FM 80, 90	16/32-21	127	M14	—	—	162	29	—	02511108	40000654	—	BD
AA2FM 107, 125	8/16-13	152.4	M20	—	—	228.5	41	—	40001844	02241043	—	UX
AA2FM 160, 180	8/16-13	152.4	M20	—	—	228.5	41	—	40001844	02241043	—	UX

SAE STANDARD	øA	øB	øC	øD	E	F	G	H	1	2	3	4
SAE A	ø 25	82.55	M12	106.4	—	—	26	—	20300047	40000649	—	—
	ø 25.4	82.55	M12	106.4	—	—	26	—	20300047	40000645	—	—
	ø 31.75	82.55	M12	106.4	—	—	26	—	20300047	40000664	—	—
	ø 32	82.55	M12	106.4	—	—	26	—	20300047	40000665	—	—
	1"6B	82.55	M12	106.4	—	—	26	—	20300047	40000648	—	—
	12/24-14	82.55	M12	106.4	—	—	26	—	20300047	40000672	—	—
SAE B	ø 25	101.6	M14	146	—	—	20	—	40000635	40000649	—	—
	ø 25.4	101.6	M14	148	—	—	20	—	40000635	40000645	—	—
	ø 31.75	101.6	M14	146	—	—	20	—	40000635	40000664	—	—
	ø 32	101.6	M14	146	—	—	20	—	40000635	40000665	—	—
	1" 6B	101.6	M14	146	—	—	20	—	40000635	40000648	—	—
	12/24-14	101.6	M14	146	—	—	20	—	40000635	40000672	—	—

SAE STANDARD	øA	øB	øC	øD	E	F	G	H	1	2	3	4
MAGNETO	ø 25	82.55	M12	—	106.4	—	26	—	40000680	40000649	—	—
	ø 25.4	82.55	M12	—	106.4	—	26	—	40000680	40000645	—	—
	ø 31.75	82.55	M12	—	106.4	—	26	—	40000680	40000664	—	—
	ø 32	82.55	M12	—	106.4	—	26	—	40000680	40000665	—	—
	1" 6B	82.55	M12	—	106.4	—	26	—	40000680	40000648	—	—
	12/24-14	82.55	M12	—	106.4	—	26	—	40000680	40000672	—	—
SAE C	ø 31.75	127	M14	—	—	162	29	—	02511108	40000664	—	—
	12/24-14	127	M14	—	—	162	29	—	02511108	40000672	—	—
	12/24-17	127	M14	—	—	162	29	—	02511108	40000674	—	—

SAMHYDRAULIK	øA	øB	øC	øD	E	F	G	H	1	2	3	4
BGM 13-50	ø16	63	M8	80	—	—	14	—	40000698	40000694	—	CE
BG 40-400	ø25	82.55	M12	106.4	—	—	26	—	20300047	40000649	—	AN
BG 40-400	ø25.4	82.55	M12	106.4	—	—	26	—	20300047	40000645	—	AI
BG 40-400	1" 6B	82.55	M12	106.4	—	—	26	—	20300047	40000648	—	AM
AGF 50-400	ø25	82.55	M12	106.4	—	—	26	—	20300047	40000649	—	AN
ARF 50-400	ø25	82.55	M12	106.4	—	—	26	—	20300047	40000649	—	AN
BR 50-400	ø25	82.55	M12	106.4	—	—	26	—	20300047	40000649	—	AN
BR 50-400	ø25.4	82.55	M12	106.4	—	—	26	—	20300047	40000645	—	AI
BR 50-400	ø31.75	82.55	M12	106.4	—	—	26	—	20300047	40000664	—	AR
BR 50-400	ø 32	82.55	M12	106.4	—	—	38	—	20300047	40000665	—	AS
BR 50-400	1" 6B	82.55	M12	106.4	—	—	26	—	20300047	40000648	—	AM
H1C 12	Ø20	80	M8	—	—	100	36.5	—	02971201	02591008	—	CS
H1C 30	W25x1,25	100	M10	—	—	125	31	—	02511221	40000668	—	DW
H1C 55	12/24-17	127	M14	—	—	162	29	—	40000653	40000672	—	UT
H1C 55	W30x2	125	M12	—	—	160	44	—	40000684	40000669	—	CA
H1C 55	Ø30	125	M12	—	—	160	44	—	40000684	02591040	—	DU
H1C 75	W35x2	140	M12	—	—	180	53	—	40001818	40000670	—	TQ
H1C 90-108	W40x2	160	M16	—	—	200	57	—	02511039	40001858	—	TP
H1C 90-108	Ø40	160	M16	—	—	200	56.5	—	02511039	02241057	—	EF
H1C 160	W45x2	180	M16	—	—	224	62	—	02511109	02591073	—	VQ
HPR 80-400	ø31.75	82.55	M12	106.4	—	—	38	—	02511001	40000664	—	AG
HPR 80-400	ø 32	82.55	M12	106.4	—	—	38	—	02511001	40000665	—	AD
HPR 80-400	12/24-14	82.55	M12	106.4	—	—	38	—	02511001	40000672	—	AE
H2V 55	W30x2	125	M12	—	—	160	44	—	40000684	40000669	—	CA
H2V 160	W45x2	180	M16	—	—	224	62	—	02511109	02591073	—	VQ

SAUER	øA	øB	øC	øD	E	F	G	H	1	2	3	4
SMF2 033-070	16/32-21	127	M12	—	—	162	29	—	02511108	40000654	—	BD
SMF2 089	16/32-23	127	M14	—	—	162	29	—	40000653	40000686	—	BI
M25MF	16/32-13	101.6	M14	146	—	—	20	—	40000635	40000657	—	AZ
M35MF	16/32-13	101.6	M14	146	—	—	20	—	40000635	40000657	—	AZ
M35/M44 MF	16/32-15	101.6	M14	146	—	—	20	—	40000635	40000671	—	BB
M44MF	16/32-13	101.6	M14	146	—	—	20	—	40000635	40000657	—	AZ
M46MF	16/32-13	101.6	M14	146	—	—	20	—	40000635	40000657	—	AZ
51D 80	W40x2	140	M12	—	—	180	53	—	40001818	40001858	—	CP
51D 110	W40x3	160	M16	—	—	200	56.5	—	02511039	40001858	—	TP
51V 080	12/24-14	127	M12	—	—	162	29	—	02511108	40000672	—	BG
51V 080	16/32-23	127	M12	—	—	162	29	—	02511108	40000686	—	BI
51V 110/160A	8/16-13	152.4	M20	—	—	228.5	40	—	02511164	02631152	—	8X
51V 160/A	8/16-13	152.4	M20	—	—	228.5	40	—	40001844	02241043	—	UX
51V 250	16/32-27	161.5	M20	—	—	317.15	35	—	02511147	02241123	—	EJ
90M 030	16/32-13	101.6	M14	146	—	—	20	—	40000635	40000657	—	AZ
90M 030	16/32-15	101.6	M14	146	—	—	20	—	40000635	40000671	—	BB
90M 042	16/32-13	101.6	M14	146	—	—	20	—	40000635	40000657	—	AZ
90M 042	16/32-15	101.6	M14	146	—	—	20	—	40000635	40000671	—	BB
90M 055	16/32-21	127	M12	—	—	162	29	—	02511108	40000654	—	BD
90M 075	16/32-21	127	M12	—	—	162	29	—	02511108	40000654	—	BD
90M 100	16/32-23	127	M12	—	—	162	29	—	02511108	40000686	—	BI
90M 100	8/16-13	127	M12	—	—	162	29	—	02511108	02241013	—	EV
90M 130	8/16-Z13	152.4	M20	—	—	228.5	40	—	40001844	022411043	—	UX

VOAC	øA	øB	øC	øD	E	F	G	H	1	2	3	4
F11-150 SAE	8/16-13	152.4	M20	228.5	—	—	41	—	40001844	02241043	—	UX
F12-30 SAE	ø25.4	101.6	M14	146	—	—	20	—	40000635	40000645	—	AV
F12-30 SAE	16/32-13	101.6	M14	146	—	—	20	—	40000635	40000657	—	AZ
F12-40 SAE	ø31.75	127	M12	—	—	162	29	—	02511108	40000664	—	BF
F12-40 SAE	12/24-14	127	M12	—	—	162	29	—	02511108	40000672	—	BG
F12-60 SAE	ø31.75	127	M12	—	—	162	29	—	02511108	40000664	—	BF
F12-60 SAE	12/24-14	127	M12	—	—	162	29	—	02511108	40000672	—	BG
F12-80 SAE	12/24-17	127	M12	—	—	162	29	—	02511108	40000674	—	BH
V12-60 SAE	12/24-14	127	M12	—	—	162	29	—	02511108	40000672	—	BG
V12-80 SAE	12/24-14	127	M12	—	—	162	29	—	02511108	40000672	—	BG
F12-110 SAE	8/16-13	152.4	M20	228.5	—	—	41	—	40001844	02241043	—	UX
V14-160 ISO	W45x2	180	M16	224	—	—	62	—	02511109	02591073	—	VQ
F12-80 ISO	ø40	140	M12	—	—	180	53	38	40001852	02241057	2731111	UW
TK	12/24-17	127	M12	—	—	162	29	14	02511108	40000674	2731096	CQ
F12-30 ISO	W30x2	100	M10	—	—	125	48	—	40000682	40000669	—	BU
F12-40 MF-HI ISO	W30x2	125	M12	160	—	—	44	—	40000684	40000669	—	CA
F12-60 ISO	W35x2	125	M12	—	—	160	44	—	40000684	40000670	—	CB
F12-80 ISO	W40x2	140	M12	—	—	180	53	—	40001852	40001858	—	CP
F12-110 ISO	W45x2	160	M16	200	—	—	56.5	—	02511039	02591073	—	VN

WHITE	øA	øB	øC	øD	E	F	G	H	1	2	3	4
RS 03-24	ø25	82.55	M12	106.4	—	—	26	—	20300047	40000649	—	AN
RS 03-24	ø25.4	82.55	M12	106.4	—	—	26	—	20300047	40000645	—	AI
RS 03-24	1" 6B	82.55	M12	106.4	—	—	26	—	20300047	40000648	—	AM
HB 03-24	ø25	82.55	M12	106.4	—	—	26	—	20300047	40000649	—	AN
HB 03-24	ø25.4	82.55	M12	106.4	—	—	26	—	20300047	40000645	—	AI
HB 03-24	ø31.75	82.55	M12	106.4	—	—	26	—	20300047	40000664	—	AR
HB 03-24	ø32	82.55	M12	106.4	—	—	26	—	20300047	40000665	—	AS
HB 03-24	1" 6B	82.55	M12	106.4	—	—	26	—	20300047	40000648	—	AM
HB 03-24	12/24-14	82.55	M12	106.4	—	—	26	—	20300047	40000672	—	AU
HB 03-24	16/32-13	82.55	M12	106.4	—	—	26	—	20300047	40000657	—	AP
RE 07-45	ø25	82.55	M12	—	106.4	—	26	—	40000680	40000649	—	BN
RE 07-45	ø25.4	82.55	M12	—	106.4	—	26	—	40000680	40000645	—	BL
RE 07-45	ø31.75	82.55	M12	—	106.4	—	26	—	40000680	40000664	—	BP
RE 07-45	ø32	82.55	M12	—	106.4	—	26	—	40000680	40000665	—	BQ
RE 07-45	1" 6B	82.55	M12	—	106.4	—	26	—	40000680	40000648	—	BM
RE 07-45	12/24-14	82.55	M12	—	106.4	—	26	—	40000680	40000672	—	BR
DR 12-46	ø25	82.55	M12	—	106.4	—	26	—	40000680	40000649	—	BN
DR 12-46	ø25.4	82.55	M12	—	106.4	—	26	—	40000680	40000645	—	BL
DR 12-46	ø31.75	82.55	M12	—	106.4	—	26	—	40000680	40000664	—	BP
DR 12-46	ø32	82.55	M12	—	106.4	—	26	—	40000680	40000665	—	BQ
DR 12-46	1" 6B	82.55	M12	—	106.4	—	26	—	40000680	40000648	—	BM
DR 12-46	12/24-14	82.55	M12	—	106.4	—	26	—	40000680	40000672	—	BR

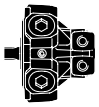

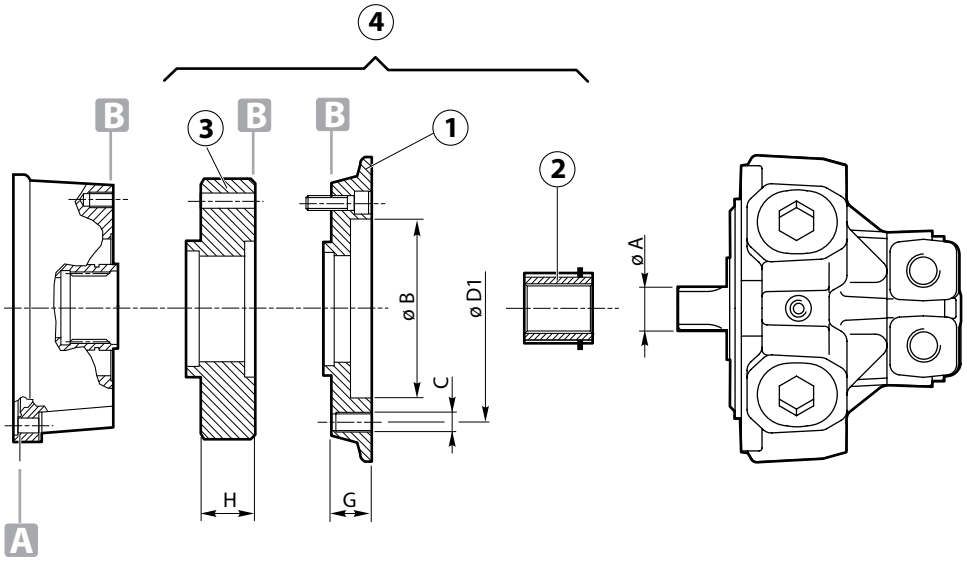

INTERMOT	øA	øB	C	øD1	E	F	G	H	1	2	3	4
G34/A-AA	ø30	82.55	M12	106.4	—	—	10.5	26	02511082	2591040	02511018	UM
G 100	W40x2	125	M8	175	—	—	44	—	02511282	40001858	—	EQ
G 100	A40x36	125	M8	175	—	—	44	—	02511282	40001858	—	ET
IAM 195	6x26x32	172	M10	190	—	—	39.5	—	02511170	40001829	—	DE

SAI	øA	øB	C	øD1	E	F	G	H	1	2	3	4
BD2	W40x2	150	M12	250	—	—	38	—	02511070	02591049	—	UE
BV2	W40x2	150	M12	250	—	—	38	—	02511070	02591049	—	UE
GM05 40-200	28x34x6	125	M10	160	—	—	40	—	02511045	40000646	—	TZ
GM05 40-200	35x2x16	125	M10	160	—	—	40	—	02511045	40000670	—	TT
GM05 40-200	ø30	125	M10	160	—	—	40	—	02511045	02591040	—	TM
GM1 100-320	28x34x6	175	M12	210	—	—	29	—	02971466	40000646	—	VB
GM1 100-320	35x2x16	175	M12	210	—	—	29	—	02971466	40000670	—	TJ
GM2 200-630	40x3x12	150	M12	250	—	—	38	—	02511070	02591044	—	UB
GM2 200-630	36x40	150	M12	250	—	—	38	—	02511070	02591063	—	VA
GM3	W40x3	265	M18	310			43.5		02511151	02591044		DS

CALZONI	øA	øB	øC	øD1	E	F	G	H	1	2	3	4
MR 250-300	42x48x8	175	M10	232	—	—	92	—	02511030	02591016	—	FA

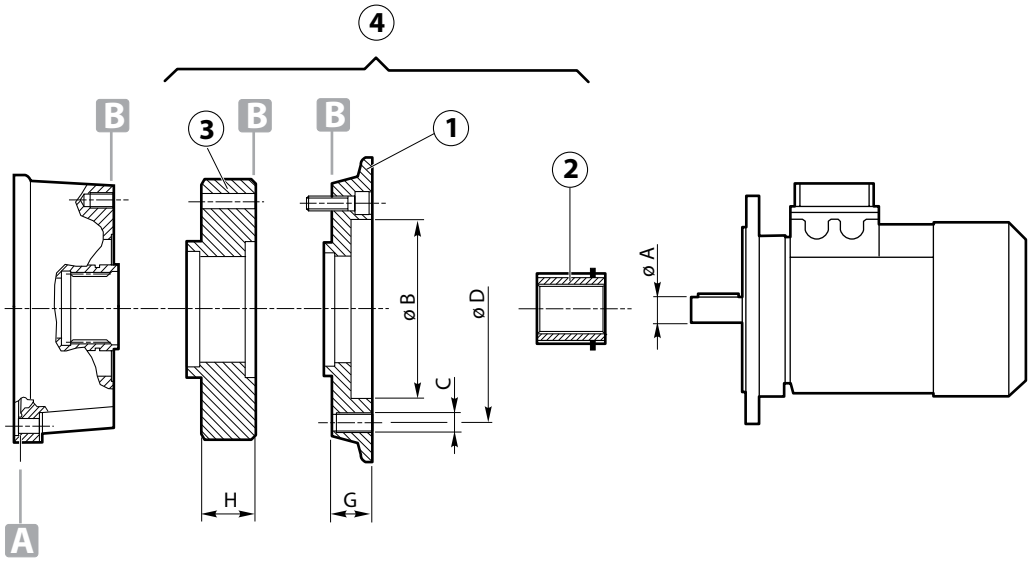

IEC	øA	øB	C	øD	E	F	G	H	1	2	3	4
63 B5	ø11	95	M8	115	—	—	20	—	02511000	02591001	—	TL
71 B5	ø14	110	M8	130	—	—	16	—	40000690	40000658	—	CC
80 B5	ø19	130	M10	165	—	—	16	—	40000683	40000659	—	BV
90 B5	ø24	130	M10	165	—	—	16	—	40000683	40000660	—	BZ
100 B5 ø24	ø24	180	M12	215	—	—	16	—	02511018	40000660	—	UÀ
100/112 B5	ø28	180	M12	215	—	—	24.5	—	02511018	40000661	—	AH
112 B5	ø38	180	M12	215	—	—	24	38	02511018	02241029	02731111	UU
132 B5	ø38	230	M12	265	—	—	49	—	02511016	—	—	AG
132 B14	ø38	130	ø 11	165	—	—	69	—	02511076	—	—	UF
200 B5	ø55	300	M18	350	—	—	130	—	02511067	02241066	—	TX

NEMA	øA	øB	C	øD	E	F	G	H	1	2	3	4
56 H	ø15.88 (0.625)	114.3 (4.500)	Ø10 (0.394)	149.2 (5.874)	—	—	53 (2.087)	—	02511122	02591085	—	VX
143-145 TC	ø22.22 (0.875)	114.3 (4.500)	Ø10 (0.394)	149.2 (5.874)	—	—	53 (2.087)	—	02511122	02591084	—	VZ
182-184 TC	ø28.57 (1.125)	215.9 (8.500)	Ø14 (0.551)	206 (8.110)	—	—	38 (1.496)	—	02511073	02591045	—	UC
213-215 TC	ø34.925 (1.375)	215.9 (8.500)	Ø14 (0.551)	184.5 (7.264)	—	—	55.5 (2.185)	—	02511037	02241048	—	VT
254-256 TC	ø41.275 (1.625)	215.9 (8.500)	Ø14 (0.551)	150 (5.906)	—	—	70 (2.756)	—	02511141	02241131	—	VJ
284-286 TC	ø47.625 (1.875)	266.7 (10.500)	Ø14 (0.551)	228.6 (9.000)	—	—	86 (3.386)	—	02511142	02241132	—	CR

mm (inch)

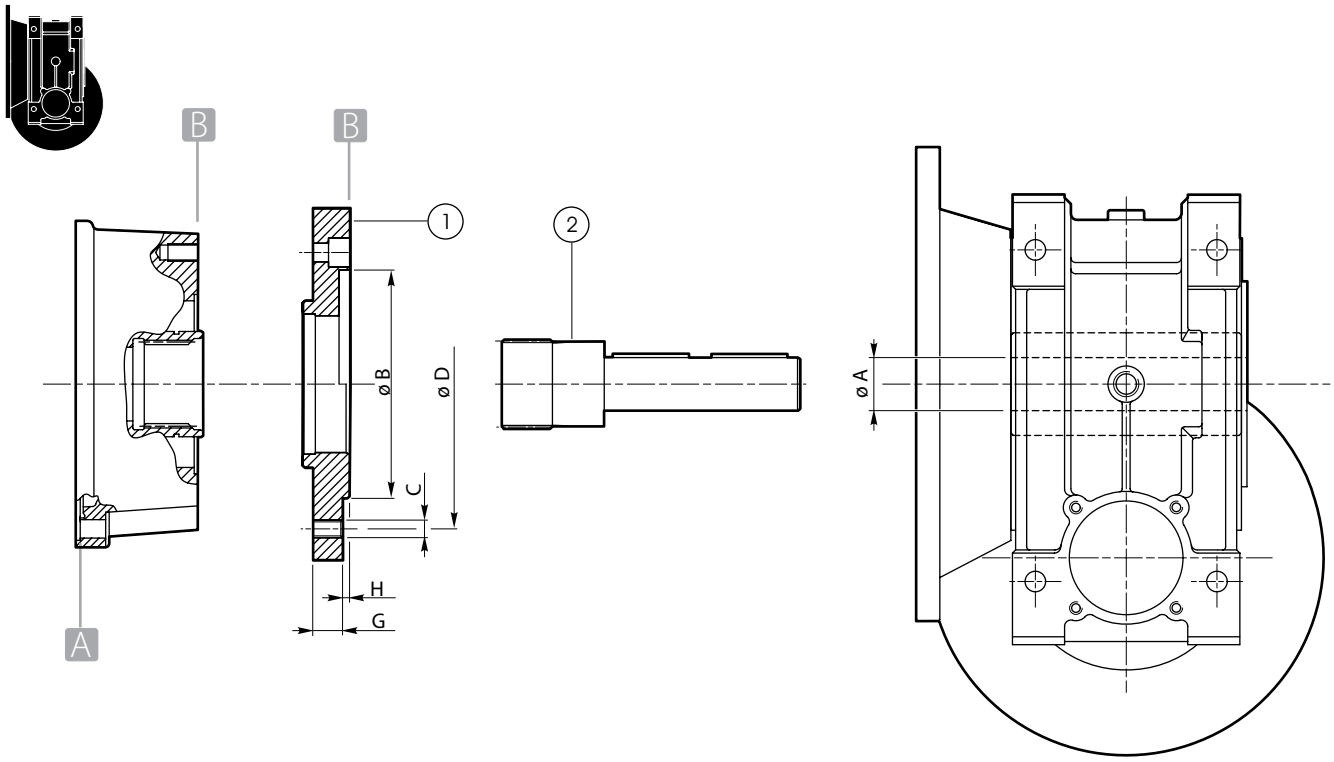

VARVEL	øA	øB	øC	øD	E	F	G	H	1	2	3	4
FRS 50 FL	Ø24	110	M10	130	—	—	16	—	02511022	40000660	—	VR
FRS 60 FL	Ø25	115	M10	150	—	—	16	—	02511095	40000649	—	UZ
FRS 70 FL	Ø28	130	M12	165	—	—	13.5	—	40000644	40000650	—	TI
FRS 85 FL	Ø32	130	M12	165	—	—	13.5	—	40000644	40000655	—	TG
FRS 130 PC	Ø48	180	Ø13	215	—		20	—	40001804	40000652	—	VI

STM	øA	øB	øC	øD	E	F	G	H	1	2	3	4
RMI 50 FL	Ø24	110	M10	130	—	—	16	—	02511022	40000660	—	VR
RMI 60 FL	Ø25	115	M10	150	—	—	16	—	02511095	40000649	—	UZ
RMI 70 FL	Ø28	130	M12	165	—	—	13.5	—	40000644	40000650	—	TI
RMI 85 FL	Ø32	130	M12	165	—	—	13.5	—	40000644	40000655	—	TG
RMI 110 F1	Ø42	130	M10	165	—	—	17	—	40001810	40001809	—	VH
RMI 130 P	Ø48	180	Ø13	215	—	—	20	—	40001804	40000652	—	VI
RMI 150 P	Ø55	180	Ø13	215	—	—	20	—	40001804	40001808	—	EN

MOTOVARIO	øA	øB	øC	øD	E	F	G	H	1	2	3	4
NMRV 110	Ø42	180	M12	215	—	—	24.5	—	02511018	40001890	—	FE
NMRV 90	Ø35	130	M10	165	—	—	17	4	40001810	02591038	—	UQ

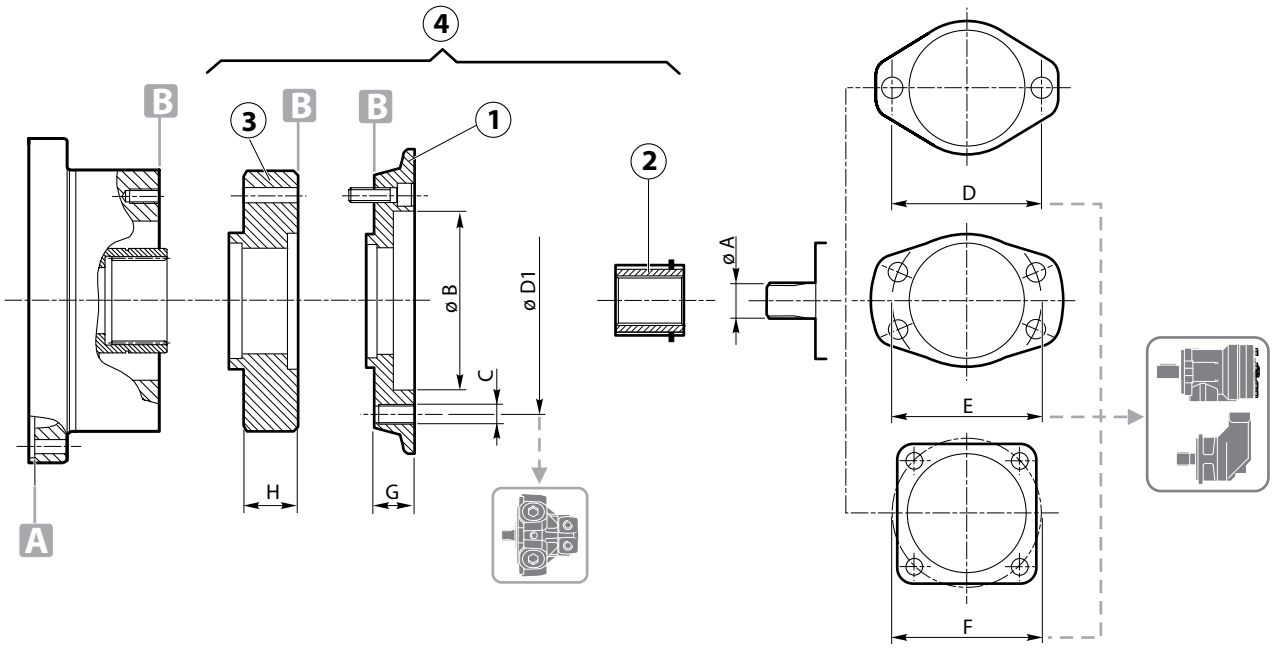

CALZONI	A	øB	øC	øD1	E	F	G	H	1	2	3	4
MR700	8x52x60	220	M12	290	—	—	55.5	—	02511229	02591156	—	4J

DANFOSS	A	øB	øC	øD	E	F	G	H	1	2	3	4
OMV	16/32-16	160	M16	—	—	200	73	—	025110102	025910102	—	5U
OMT 160-500	12/24-17	125	M12	—	—	160	66.5	—	025110117	02591123	—	3I
OMT 160-500	Ø40	125	M12	—	—	160	66.5	—	025110117	025910109	—	7W

EATON	A	øB	øC	øD	E	F	G	H	1	2	3	4
SERIE 6000	12/24-17	127	M14	—	—	162	29	—	02511192	02591123	—	3Q
SERIE 6000	12/24-14	127	M12	—	—	162	37	—	02511192	02591163	—	2G

INTERMOT	A	øB	øC	øD1	E	F	G	H	1	2	3	4
IAM H3 400-700	36x42x8	230	M14	254	—	—	43	—	02511197	02591128	—	8I
IAM300	8x32x38	190	M12	210	—	—	38.5	—	02511248	02591166	—	4N

LINDE	A	øB	øC	øD	E	F	G	H	1	2	3	4
HMF 135	16/32-27	152.4	M20	228.5	—	—	35	—	02511164	02631166	—	3Z
HMR 135	16/32-27	152.4	M20	228.5	—	—	35	—	02511164	02631166	—	3Z
HMF 105	16/32-23	127	M16	181	—	—	34	—	02511192	02631203	—	3H

M+S	A	øB	øC	øD	E	F	G	H	1	2	3	4
EPMT 160-500	12/24-17	125	M12	—	—	160	66.5	—	025110117	02591123	—	3I
EPMT 160-500	Ø40	125	M12	—	—	160	66.5	—	025110117	025910109	—	7W

REXROTH	A	øB	øC	øD	E	F	G	H	1	2	3	4
A2FM 107	W40x2	160	M16	—	—	200	51.5	—	02511230	02631193	—	3U
A2FM 160	W50x2	180	M16	—	—	224	62	—	02511163	02631150	—	3T
A2FM 200	W50x2	200	M20	—	—	250	73	—	02511165	02631150	—	4B
A6VM 107	W45x2	160	M16	—	—	200	53	—	02511167	02631160	—	9N
A6VM 160	W45x2	180	M16	—	—	224	62	—	02511163	02631151	—	9Q
A6VM 160	W50x2	180	M16	—	—	224	62	—	02511163	02631150	—	3T
A6VM 250	W50x2	200	M 20	—	—	250	73	—	02511165	02631150	—	4B
A6VM 355	W60x2	280	M16	—	—	320	84.5	—	02511261	02631210	—	5L
AA6VM 107, 160	8/16-13	152.4	M20	—	—	228.5	40	—	02511164	02631152	—	8X
AA2FM 107, 125	8/16-13	152.4	M20	—	—	228.5	40	—	02511164	02631152	—	8X
AA2FM 160, 180	8/16-13	152.4	M20	—	—	228.5	40	—	02511164	02631152	—	8X

SAI	A	øB	øC	øD	E	F	G	H	1	2	3	4
GM1	28x34x6	175	M12	210	—	—	29	—	02511263	02591176	—	6B
GM2	36x40	150	M12	250	—	—	38	—	02511209	02591141	—	9A
GM2	W40x3	150	M12	250	—	—	38	—	02511209	02591170	—	8B
GM3	W40x3	265	M18	310	—	—	43.5	—	02511151	02591044	—	4S

SAMHYDRAULIK	A	øB	øC	øD	E	F	G	H	1	2	3	4
H1C 160 M	W45x2	180	M16	—	—	224	62	—	02511039	02631151	—	9Q
H1C 226 M	W50x2	200	M20	—	—	250	73	—	02511165	02631150	—	4B
H2V 160 M	W45x2	1801	M16	—	—	224	62	—	02511163	02631151	—	9Q

SAUER	A	øB	øC	øD	E	F	G	H	1	2	3	4
51V250	16/32-27	165.1	M20	—	—	317.5	38	—	02511201	02631166	—	5J
90M 130	8/16-13	152.4	M 20	—	—	228.5	40	—	02511164	02631152	—	8X

VOAC	A	øB	øC	øD	E	F	G	H	1	2	3	4
F11-50 CETOP	W45x2	200	M20	250	—	—	73	—	02511165	02631151	—	5P
F11-150 SAE	8/16-13	152.4	M20	—	—	228.5	40	—	02511164	02631152	—	8X
F12-110 SAE	8/16-13	152.4	M20	—	—	228.5	40	—	02511164	02631152	—	8X
V14-160 ISO	W45x2	180	M16	—	—	224	62	—	02511163	02631151	—	9Q
F12-110 ISO	W45x2	160	M116	—	—	200	53	—	02511167	02631160	—	9N

Direct motor adapters available for:

KAWASAKY	Shaft
KAWASAKI HMC 80	6/12-14
KAWASAKI HMC/HMB/HPC 125	6/12-20
KAWASAKI HMB 200	6/12 -14
KAWASAKI HMB 200	W85x3

SAI	Shaft
GM3	W40x3
GM3	8x46x54
GM4/5	8x56x65
GM4/5	W65x3
GM6	N80x3

POCLAIN	Shaft
MS08/MSE08	W70x3
MS18/MSE18	W90x3
MS18/MSE18	NF E-22 141 (m2.5 z34)
MS50	NF E-22 141 (m3.75 z33)
MS02/MSE02	W50x2

POCLAIN HYDROBASE	Shaft
MS18/MSE18	NF E-22 141 (m2.5 z34)
MS35	NF E-22 141 (m2.5 z34)
MS50	NF E-22 141 (m2.5 z38)

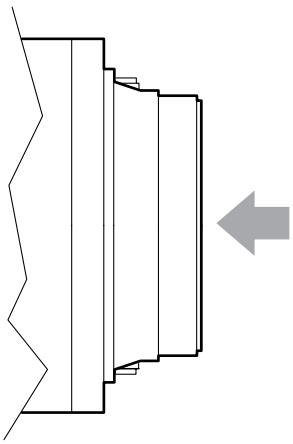

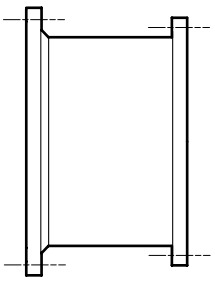

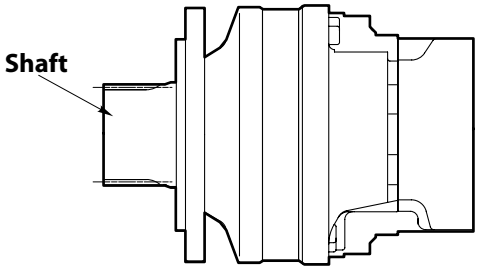

FL

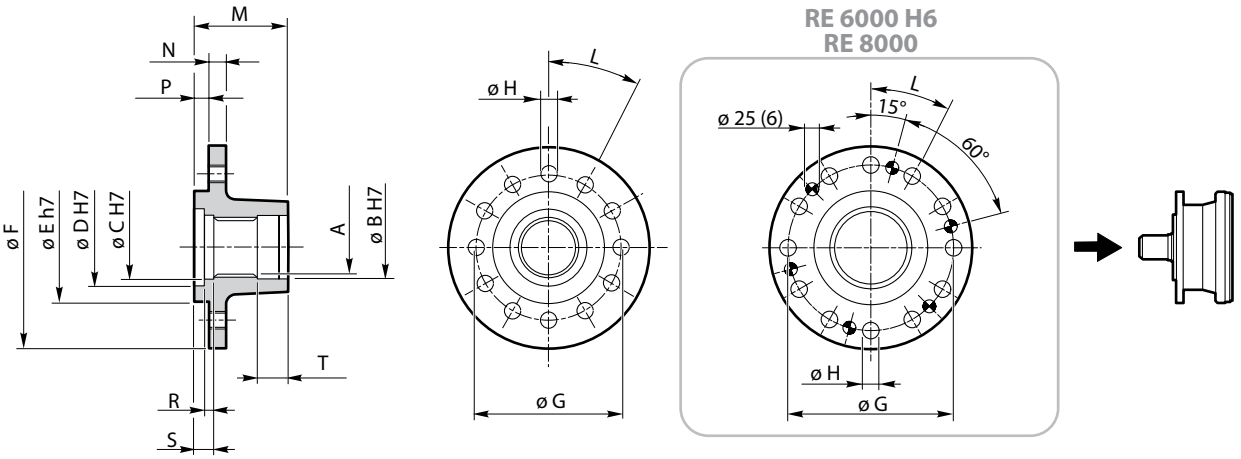

	VERSION	A	ø B	ø C	ø D	ø E	ø F	ø G	ø H	L
RE 110-210	N-P-T-TR	A40x36 DIN 5482	42	42	52	75	135	98	M12x1.5 (4)	90°
RE 240	T-TR	A58x53 DIN 5482	60	60	—	95	165	145	12.5 (12)	30°
RE 310-510-610	N-P-T-TL	A58x53 DIN 5482	60	60	—	95	165	145	12.5 (12)	30°
RE 810	N-P-T	A70x64 DIN 5482	72	72	—	125	208	175	19(12)	30°
RE 1020-1520-2000	T-H	A80x74 DIN 5482	85	85	—	125	208	175	19(12)	30°
RE 2520-3000	H	A100x94 DIN 5482	105	105	—	170	254	212	21 (12)	30°
RE 3510-4800	H	N 120x3 DIN 5480	124	130	—	160	298	250	21 (12)	30°
RE 6000	H	N 120x3 DIN 5480	120	120	—	200	308	260	25 (12)	30°
RE 6000	H6	N 150x5 DIN 5480	151	151	—	240	385	320	32 (12)	30°
RE 8000	H	N 150x5 DIN 5480	151	151	—	240	385	320	32 (12)	30°
GB 12010-16000	H	N 170x5 DIN 5480	170	175	—	250	450	400	28 (18)	20°
GB 21000	H	N220x5 DIN 5480	220	230	—	315	500	450	32 (18)	20°

	VERSION	M	N	P	R	S	T	CODE
RE 110-210	N-P-T-TR	63	12	10	7.5	13.5	20.5	40000618
RE 240	T-TR	74	14	10	8	—	24	02571148
RE 310-510-610	N-P-T-TL	74	14	10	8	—	24	02571148
RE 810	N-P-T	90	21	14	10	—	29	40001838
RE 1020-1520-2000	T-H	90.5	21	14	9.5	—	30.5	40001848
RE 2520-3000	H	110	24	20	12	—	37	40001851
RE 3510-4800	H	150	30	20	28	—	29	02571068
RE 6000	H	125	31	19	11	—	30	02571054
RE 6000	H6	150	35	25	11	—	33	02571063
RE 8000	H	150	35	25	11	—	33	02571063
GB 12010-16000	H	163	42	48	14	—	42	02571048
GB 21000	H	205	47	70	16	—	51.5	02571049

On demand for different size

BS

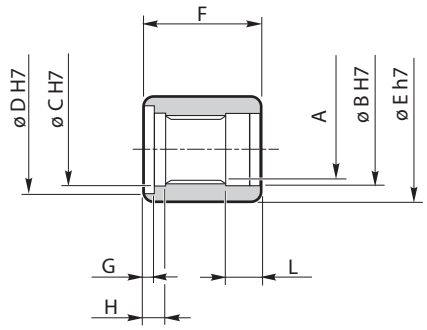

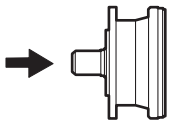

	VERSION	A	ø B	ø C	ø D	ø E	F	G	H	L	CODE
RE 110-210	N-P	A40x36 DIN 5482	42	42	—	60	55	—	7	20.5	40000608
RE 110-210	T-TR	A40x36 DIN 5482	42	42	51	60	67.5	5	12	20.5	40000617
RE 240	T-TR	A58x53 DIN 5482	60	60	72	94	85	16	23	25	40000642
RE 310-510-610	N-P-T-TL	A58x53 DIN 5482	60	60	72	94	85	16	23	25	40000642
RE 810	N-P-T	A70x64 DIN 5482	72	72	—	95	90	—	10	29	40001836
RE 1020-1520-2000	T-H	A80x74 DIN 5482	85	85	—	108	90.5	—	10.5	30.5	40001847
RE 2520-3000	H	A100x94 DIN 5482	105	105	—	136	110	—	12	33	40001850
RE 3510-4800	H	N120x3x9H DIN 5480	124	130	—	175	150	—	28	29	02631054
RE 6000	H	N120x3x9H DIN 5480	120	120	—	160	124.5	—	10.5	31	02631082
RE 6000	H6	N150x5x9H DIN 5480	151	151	—	220	150	—	11	33	02631092
RE 8000	H	N150x5x9H DIN 5480	151	151	—	220	150	—	11	33	02631092
GB 12010-16000	H	N170x5x9H DIN 5480	170	175	—	235	163	—	14	42	02631026
GB 21000	H	N220x5x9H DIN 5480	220	230	—	295	205	—	16	51.5	02631027

On demand for different size

EP

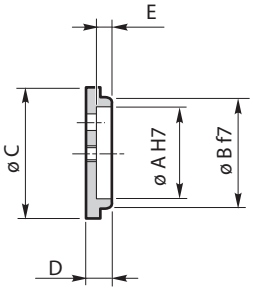

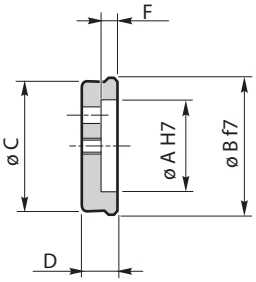

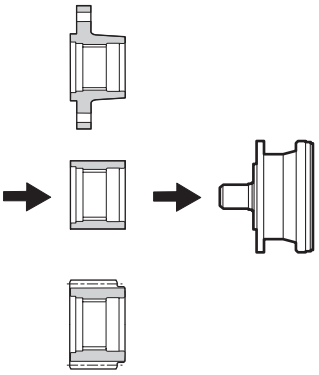

	VERSION	ø A	ø B	ø C	D	E	F	CODE
RE 110-210	N-P	35	42	50	9.5	4.5	—	40000609
RE 110-210	T-TR	35	52	50	14	—	6.8	40000614
RE 240	T-TR	50	60	70	13	5.5	—	40000613
RE 310-510	N-P	50	60	70	13	5.5	—	40000613
RE 310-510-610	T-TL	50	72	—	18	—	9	40000616
RE 810	N-P-T	62	72	80	18	9.25	—	40001832
RE 1020-1520-2000	T-H	70	85	98	19.5	8.5	—	40001840
RE 2520-3000	H	85	105	114	20	10	—	40001849
RE 3510-4800	H	90	130	—	26	—	14	02551072
RE 6000	H	100	120	135	21	9.5	—	02551060
RE 6000	H6	125	151	170	25	9	—	02551077
RE 8000	H	125	151	170	25	9	—	02551077
GB 12010-16000	H	150	175	198	31	13.5	—	02551044
GB 21000	H	200	230	260	43.5	19	—	02551046

On demand for different size

P

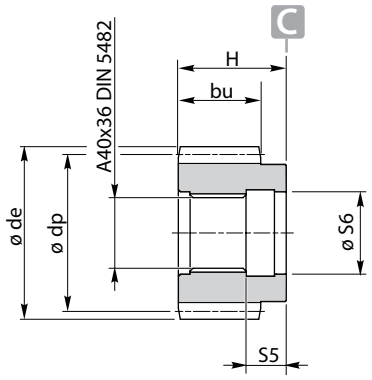

	M	z	x	ø de	ø dp	bu	H	S5	ø S6	Code
RE 110 RE 210	4	20	0	88	80	42	55	20.5	ø 42 H7	40100882
	4	24	0	104	96	45	57	20.5	ø 42 H7	40100889
	4.5	14	0.5	76.5	63	55	55	20.5	ø 42 H7	40100835
	4.5	16	0	81	72	70	80	20.5	ø 42 H7	40100802
	4.5	16	0	81	72	45	55	20.5	ø 42 H7	40100926
	4.5	16	0	81	72	45	75	20.5	ø 42 H7	40100943
	5	14	0	80	70	60	60	20.5	ø 42 H7	40100810
	5	14	0	80	70	70	80	20.5	ø 42 H7	40100812
	5	14	0.5	85	70	65	65	20.5	ø 42 H7	40100811
	5	14	0.5	85	70	60	90	20.5	ø 42 H7	40100885
	5	14	0.5	85	70	55	78	20.5	ø 42 H7	40100888
	5	14	0.5	84.5	70	47	55	20.5	ø 42 H7	02571014
	5	16	0	90	80	70	80	20.5	ø 42 H7	40100813
	5	17	0	95	85	70	80	20.5	ø 42 H7	40100815
	5	18	0	100	90	70	80	20.5	ø 42 H7	40100814
	5	20	0	109.5	100	45	74	20.5	ø 42 H7	40100918
	5	22	0	120	110	50	76	20.5	ø 42 H7	40100934
	6	12	0.5	89	72	70	80	20.5	ø 42 H7	40100825
	6	13	0	90	78	60	85	20.5	ø 42 H7	40100914
	6	13	0	90	78	50	80	20.5	ø 42 H7	40100915
	6	13	0.5	95	78	61	97	20.5	ø 42 H7	40100823
	6	14	0	96	84	50	60	20.5	ø 42 H7	40100824
	6	14	0	96	84	70	80	20.5	ø 42 H7	40100826
	6	14	0	96	84	70	100	20.5	ø 42 H7	40100827
	6	15	0	102	90	60	82.5	20.5	ø 42 H7	40100935
	6	15	0.5	108	90	40	73	20.5	ø 42 H7	40100819
	6	17	0	114	102	80	110	20.5	ø 42 H7	40100913
	6	18	0	120	108	70	80	20.5	ø 42 H7	40100830
	6	20	0	132	120	60	85	20.5	ø 42 H7	40100894
	8	12	0.5	118	96	60	65	20.5	ø 42 H7	40100841
	8	14	0.5	136	112	80	110	20.5	ø 42 H7	40100912
	8	15	0	136	120	70	80	20.5	ø 42 H7	40100846

On demand for different size

P

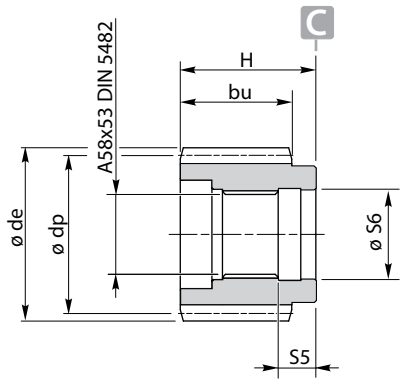

	M	z	x	ø de	ø dp	bu	H	S5	ø S6	Code
RE 240 RE 310 RE 510 RE 610	5	21	0	115	105	60	76	25	ø 60 H7	40100883
	5	22	0	120	110	50	76	25	ø 60 H7	02571051
	6	14	0.5	101.5	90	65	78	25	ø 60 H7	40100923
	6	16	0	108	96	70	80	25	ø 60 H7	40100867
	6	18	0	120	108	70	80	25	ø 60 H7	40100831
	6	20	0	132	120	75	80	25	ø 60 H7	40100873
	6	24	0	156	144	68	77.5	25	ø 60 H7	40100808
	7	14	0	112	98	78.5	78.5	25	ø 60 H7	40100874
	8	12	0.5	120	96	80	100	25	ø 60 H7	40100818
	8	13	0	120	104	68	78	25	ø 60 H7	02571111
	8	14	0	128	112	65	68	25	ø 60 H7	40100844
	8	14	0	128	112	75	85	25	ø 60 H7	40100845
	8	15	0	136	120	75	85	25	ø 60 H7	40100848
	8	16	0	144	128	75	85	25	ø 60 H7	40100849
	8	16	0.5	152	128	75	85	25	ø 60 H7	40100893
	8	17	0	149	136	78	110	25	ø 60 H7	40100937
	8	18	0	160	144	76	78	25	ø 60 H7	40100850
	8	18	0	160	144	96	98	25	ø 60 H7	40100898
	8	19	0	174	152	85	102	25	ø 60 H7	02571055
	10	11	0.5	136	110	80	96.5	25	ø 60 H7	40100807
	10	11	0.5	136	110	100	120.5	25	ø 60 H7	40100938
	10	12	0.5	149	120	80	96.5	25	ø 60 H7	40100820
	10	12	0.35	143	120	80	100	25	ø 60 H7	40100838
	10	13	0	150	130	80	80	25	ø 60 H7	40100929
	10	13	0	150	130	90	105	25	ø 60 H7	40100942
	10	14	0	160	140	80	80	25	ø 60 H7	40100866
	10	14	0	160	140	90	105	25	ø 60 H7	40100868
	10	15	0	170	150	80	80	25	ø 60 H7	40100839

	M	z	x	ø de	ø dp	bu	H	S5	ø S6	Code
RE 810	8	15	0.3	140.8	120	67	96	29	ø 72 H7	02571235
	8	17	0	152	136	80	99	29	ø 72 H7	02571121
	8	20	0	176	160	115	124	29	ø 72 H7	025710101
	8	23	0.5	208	184	86	131	29	ø 72 H7	40100853
	10	11	0.5	136	110	80	90	29	ø 72 H7	40100857
	10	12	0.5	150	120	90	90	29	ø 72 H7	02571110
	10	13	0.5	160	130	90	90	29	ø 72 H7	40100852
	10	13	0.5	160	130	99	99	29	ø 72 H7	02571000
	10	14	0	160	140	99	99	29	ø 72 H7	02571024
	10	14	0.5	170	140	67	96	29	ø 72 H7	02571236
	10	15	0	170	150	98	112	29	ø 72 H7	02571037
	10	15	0.5	180	150	98	112	29	ø 72 H7	02571183
	10	17	0.48	198	170	80	90	29	ø 72 H7	02571013
	12	11	0.5	167	132	90	120	29	ø 72 H7	40100821
	12	13	0.5	192	156	118	126	29	ø 72 H7	40100840
	12	13	0.3	187	156	75	90	29	ø 72 H7	02571019
	12	14	0.5	199	168	90	100	29	ø 72 H7	02571101
	14	12	0.3	205	168	80	110	29	ø 72 H7	02571102

On demand for different size

P

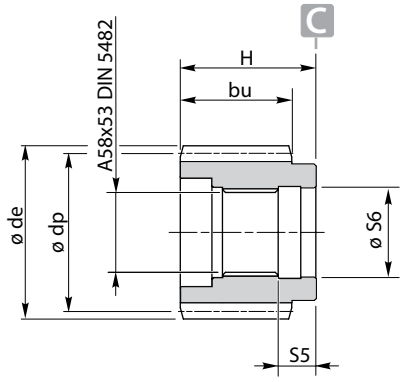

	M	z	x	ø de	ø dp	bu	H	S5	ø S6	Code
RE 1020 RE 1520 RE 2000	10	14	0.32	162.4	140	103	116	30.5	ø 85 H7	02571001
	10	15	0	170	150	90	115	30.5	ø 85 H7	40100940
	10	18	0	198	180	87	116	30.5	ø 85 H7	40100822
	12	11	0.5	167	132	100	120	30.5	ø 85 H7	02571136
	12	13	0.5	192	156	120	120	30.5	ø 85 H7	02571173
	12	14	0.5	199	168	90.5	90.5	30.5	ø 85 H7	40100856
	12	16	0	214	192	90	95	30.5	ø 85 H7	40100850
	14	11	0.5	192.36	154	97	97	30.5	ø 85 H7	025710113
	14	12	0.5	210	168	135	135	30.5	ø 85 H7	02571182
	14	14	0.5	233.8	196	105	105	30.5	ø 85 H7	02571103
	16	10	0.5	208	160	115	115	30.5	ø 85 H7	025710126
	16	19	0	336	304	120	120	30.5	ø 85 H7	02571006
	18	10	0.5	234	180	157	157	30.5	ø 85 H7	02571152
	18	13	0.5	288	234	100	100	30.5	ø 85 H7	02571208
	20	14	0.5	340	280	125	140	30.5	ø 85 H7	025710102

	M	z	x	ø de	ø dp	bu	H	S5	ø S6	Code
RE 2520 RE 3000	12	16	0.5	228.4	192	120	130	34	ø 105 H7	02571044
	14	14	0	224	196	110	110	34	ø 105 H7	02571030
	14	15	0.5	250.6	210	110	120	34	ø 105 H7	02571221
	16	13	0.5	256	208	145	145	34	ø 105 H7	02571201
	16	17	0.5	320	272	140	150	34	ø 105 H7	02571159
	16	19	0.5	352	304	140	150	34	ø 105 H7	02571167
	20	12	0.5	299	240	150	150	34	ø 105 H7	02571176

On demand for different size

VE

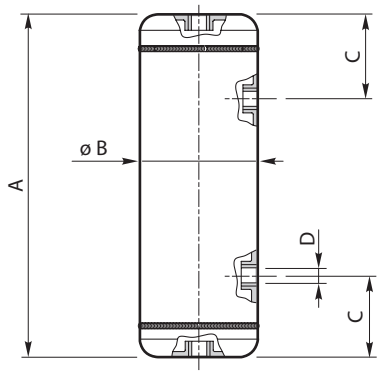

A	ø B	C	D	Capacity [Liters]	CODE
230	80	55	1/4" GAS (4)	1.0	40000712
330	130	85	1/4" GAS (4)	3.8	40000711
330	160	85	1/4" GAS (4)	5.5	40000710
510	150	85	1/4" GAS (4)	7.7	40000704
690	150	85	1/4" GAS (4)	10.7	40000706

On demand for different size

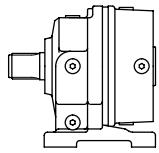	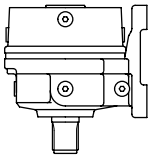	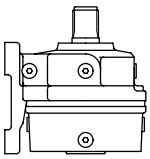	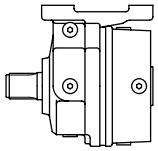
B3	**V5**	**V6**	**B8**
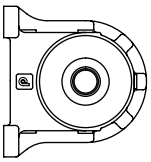	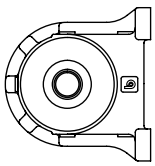	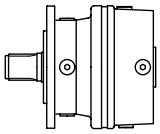	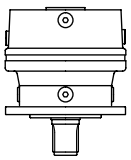
B6	**B7**	**B5**	**V1**
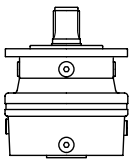			
V3			

pos. 0 = STANDARD

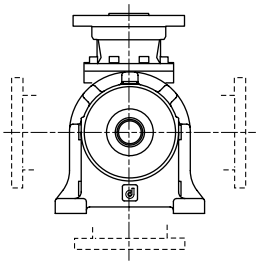

pos. 1= 90° **pos. 3= 270°**

pos. 2 = 180°

N

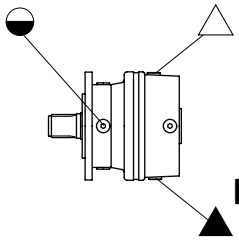
B5

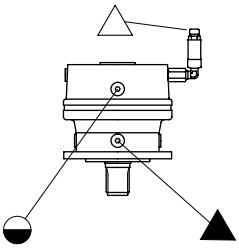
V1

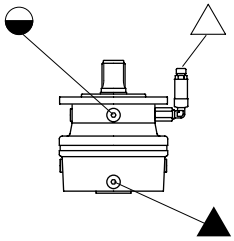
V3

110÷1520

T - TL - TR

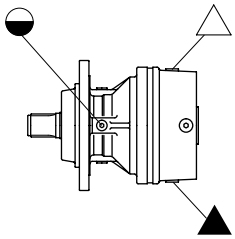
B5

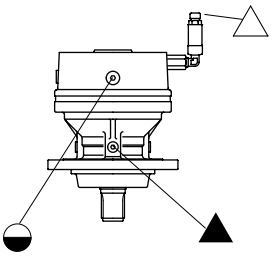
V1

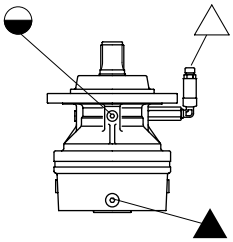
V3

110÷810

H

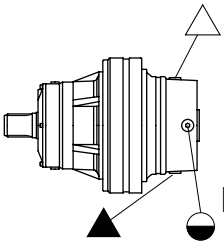
B5

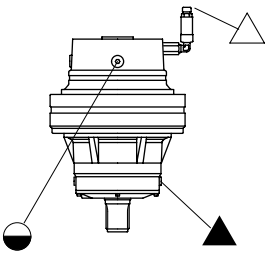
V1

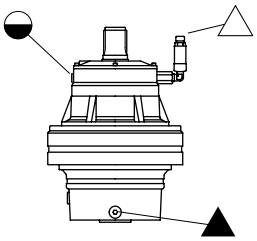
V3

1520÷130000

F

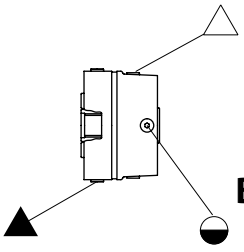
B5

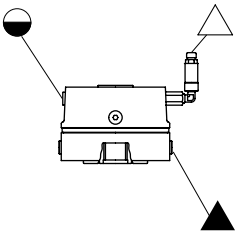
V1

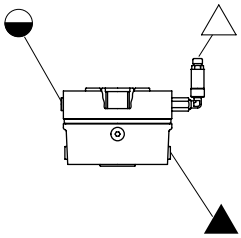
V3

110÷810

F

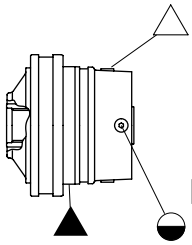
B5

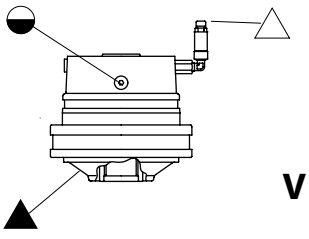
V1

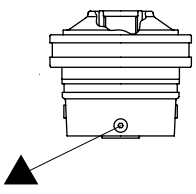
V3

1020÷1520

P

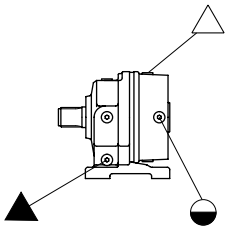

B3

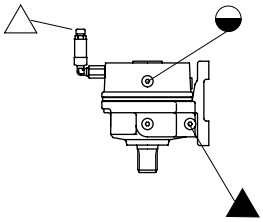

V5

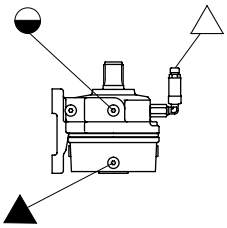

V6

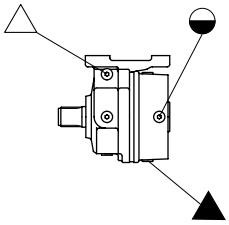

B8

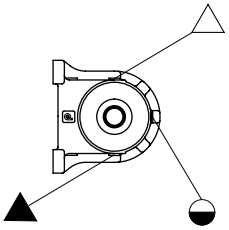

B6

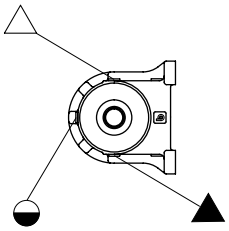

B7

110÷810

RAS

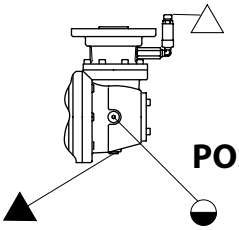

POS. 0

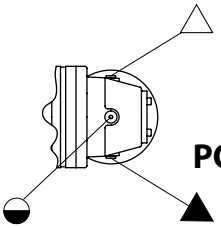

POS. 1

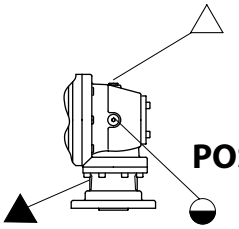

POS. 2

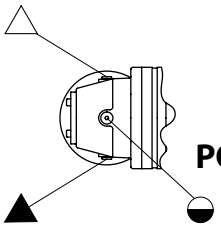

POS. 3

110÷510

RAD

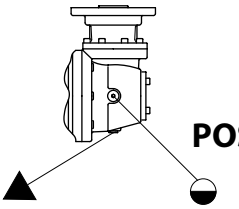

POS. 0

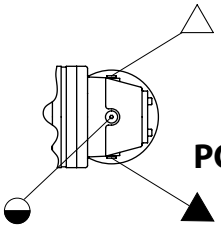

POS. 1

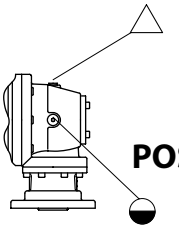

POS. 2

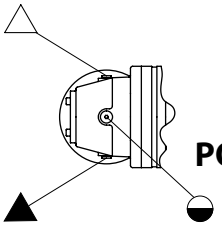

POS. 3

110÷510

dinamic oil

[Liters]	B3	V5	V6	B6	B7	B8	B5	V1	V3
		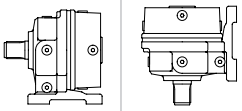	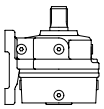	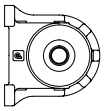	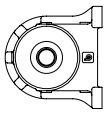	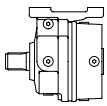	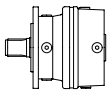	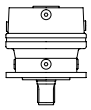	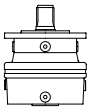
RE 111	0.7	1.4	1.4	0.7	1.4	1.4	0.4	0.8	0.8
RE 112	0.9	1.8	1.8	0.9	1.8	1.8	0.5	1	1
RE 113	1.1	2.2	2.2	1.1	2.2	2.2	0.7	1.4	1.4
RE 114	1.3	2.6	2.6	1.3	2.6	2.6	0.8	1.6	1.6
RE 211	0.8	1.6	1.6	0.8	1.6	1.6	0.5	1	1
RE 212	1	2	2	1	2	2	0.6	1.2	1.2
RE 213	1.2	2.4	2.4	1.2	2.4	2.4	0.7	1.4	1.4
RE 214	1.4	2.8	2.8	1.4	2.8	2.8	0.9	1.8	1.8
RE 241	0.8	1.6	1.6	0.8	1.6	1.6	0.5	1	1
RE 242	1	2	2	1	2	2	0.6	1.2	1.2
RE 243	1.2	2.4	2.4	1.2	2.4	2.4	0.7	1.4	1.4
RE 244	1.4	2.8	2.8	1.4	2.8	2.8	0.9	1.8	1.8
RE 311	1.4	2.8	2.8	1.4	2.8	2.8	1	2	2
RE 312	1.6	3.2	3.2	1.6	3.2	3.2	1.2	2.4	2.4
RE 313	1.7	3.4	3.4	1.7	3.4	3.4	1.3	2.6	2.6
RE 314	1.8	3.6	3.6	1.8	3.6	3.6	1.4	2.8	2.8
RE 511	1.5	3	3	1.5	3	3	1.1	2.2	2.2
RE 512	1.7	3.4	3.4	1.7	3.4	3.4	1.3	2.6	2.6
RE 513	1.8	3.6	3.6	1.8	3.6	3.6	1.5	3	3
RE 514	1.9	3.8	3.8	1.9	3.8	3.8	1.6	3.2	3.2
RE 611	1.6	3.2	3.2	1.6	3.2	3.2	1.2	2.4	2.4
RE 612	1.8	3.6	3.6	1.8	3.6	3.6	1.4	2.8	2.8
RE 613	1.9	3.8	3.8	1.9	3.8	3.8	1.6	3.2	3.2
RE 614	20	40	40	20	40	40	1.7	3.4	3.4
RE 811	1.8	3.6	3.6	1.8	3.6	3.6	1.5	3	3
RE 812	2	4	4	2	4	4	1.7	3.4	3.4
RE 813	2.2	4.4	4.4	2.2	4.4	4.4	1.9	3.8	3.8
RE 814	2.3	4.6	4.6	2.3	4.6	4.6	2	4	4
RE 1021	2.4	4.8	4.8	2.4	4.8	4.8	2.1	4.2	4.2
RE 1022	2.6	5.2	5.2	2.6	5.2	5.2	2.3	4.6	4.6
RE 1023	2.7	5.4	5.4	2.7	5.4	5.4	2.4	4.8	4.8
RE 1024	2.9	5.8	5.8	2.9	5.8	5.8	2.6	5.2	5.2

[Liters]	B5	V1	V3
	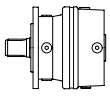	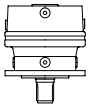	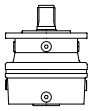
RE 1521	2.7	5.4	5.4
RE 1522	3	6	6
RE 1523	3.2	6.4	6.4
RE 1524	3.4	6.8	6.8
RE 2001	2.7	5.4	5.4
RE 2002	3	6	6
RE 2003	3.3	6.6	6.6
RE 2004	3.4	6.8	6.8
RE 2002L	3	6	6
RE 2003L	3.1	6.2	6.2
RE 2004L	3.2	6.4	6.4
RE 2521	3.9	7.7	7.7
RE 2522	4.5	9	9
RE 2523	4.7	9.4	9.4
RE 2524	5	9.9	9.9
RE 3001	3.8	7.6	7.6
RE 3002	4.6	9.1	9.1
RE 3003	4.8	9.5	9.5
RE 3004	5	10	10
RE 3511	4.9	9.8	9.8
RE 3512	5.7	11.4	11.4
RE 3513	6	12	12
RE 3514	6.2	12.4	12.4
RE 4801	4.7	9.4	9.4
RE 4802	6.8	13.6	13.6
RE 4803	7.2	14.4	14.4
RE 4804	7.4	14.8	14.8
RE 6001	7.5	15	15
RE 6002	8.5	17	17
RE 6003	9	18	18
RE 6004	9.3	18.6	18.6
RE 6002L	8.5	17	17
RE 6003L	9	18	18

[Liters]	B5	V1	V3
	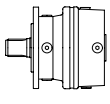	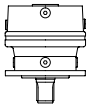	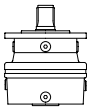
RE 6004L	9.2	18.4	18.4
RE 8001	8.3	16.6	16.6
RE 8002	10.2	20.4	20.4
RE 8003	11	22	22
RE 8004	11.5	23	23
RE 8005	11.7	23.4	23.4
RE 8002L	10.2	20.4	20.4
RE 8003L	10.8	21.6	21.6
RE 8004L	11.4	22.8	22.8
RE 8005L	11.6	23.2	23.2
GB 12011	13.5	27	27
GB 12012	15.5	31	31
GB 12013	16.5	33	33
GB 12014	16.8	33.6	33.6
GB 12015	17	34	34
GB 12012L	15.5	31	31
GB 12013L	16.3	32.6	32.6
GB 12014L	16.7	33.4	33.4
GB 12015L	17	34	34
GB 16001	14.5	29	29
GB 16002	18	36	36
GB 16003	19.2	38.4	38.4
GB 16004	19.6	39.2	39.2
GB 16005	19.8	39.6	39.6
GB 16002L	17	34	34
GB 16003L	18	36	36
GB 16004L	18.5	37	37
GB 16005L	18.7	37.4	37.4
GB 21001	20	40	40
GB 21002	23.5	47	47
GB 21003	24.5	49	49
GB 21004	25	50	50
GB 21005	25.5	51	51

dinamic oil

[Liters]	B5	V1	V3
		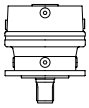	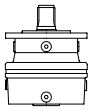
GB 26001	20	40	40
GB 26002	25.5	51	51
GB 26003	27.5	55	55
GB 26004	28.5	57	57
GB 26005	29	58	58
GB 31001	38	76	76
GB 31002	46.5	93	93
GB 31003	48.5	97	97
GB 31004	49.5	99	99
GB 31005	50	100	100
GB 40001	41	82	82
GB 40002	49	98	98
GB 40003	51	102	102
GB 40004	52	104	104
GB 40005	52	104	104
GB 45001	41	82	82
GB 45002	50	100	100
GB 45003	53.5	107	107
GB 45004	55	110	110
GB 45005	55.5	111	111
GB 53001	70	140	140
GB 53002	80	160	160
GB 53003	85	170	170
GB 53004	86.5	173	173
GB 53005	87	174	174
GB 61001	70	140	140
GB 61002	80	160	160
GB 61003	85	170	170
GB 61004	86.5	173	173
GB 61005	87	174	174
GB 85001	75	150	150
GB 85002	87.5	175	175
GB 85003	93	186	186

[Liters]	B5	V1	V3
		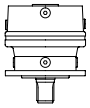	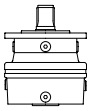
GB 85004	95	190	190
GB 85005	95.5	191	191
GB 110001	145	290	290
GB 110002	170	340	340
GB 110003	180	360	360
GB 110004	183	366	366
GB 110005	185	370	370
GB 130001	144	288	288
GB 130002	172	344	344
GB 130003	181	362	362
GB 130004	185	370	370
GB 130005	186	372	372
GB 150001	143	286	286
GB 150002	172	344	344
GB 150003	185	370	370
GB 150004	187	374	374
GB 150005	188	376	376
GB 205001	255	510	510
GB 205002	300	600	600
GB 205003	318	636	636
GB 205004	326	652	652
GB 205005	329	658	658
GB 235001	255	510	510
GB 235002	300	600	600
GB 235003	335	670	670
GB 235004	345	690	690
GB 235005	247	494	494

[Liters]

	B3-1	V5	V6	B6-1	B7	B8	B5-1	V1	V3
	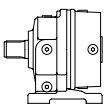	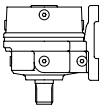	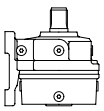	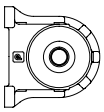	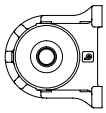	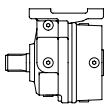	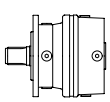	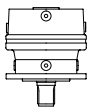	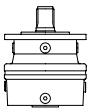
RA 112	1.5	3	3	1.5	3	3	1.2	2.4	2.4
RA 113	1.7	3.4	3.4	1.7	3.4	3.4	1.3	2.6	2.6
RA 114	1.9	3.8	3.8	1.9	3.8	3.8	1.5	3	3
RA 212	1.6	3.2	3.2	1.6	3.2	3.2	1.3	2.6	2.6
RA 213	1.8	3.6	3.6	1.8	3.6	3.6	1.4	2.8	2.8
RA 214	2	4	4	2	4	4	1.5	3	3
RA 242	1.6	3.2	3.2	1.6	3.2	3.2	1.3	2.6	2.6
RA 243	1.8	3.6	3.6	1.8	3.6	3.6	1.4	2.8	2.8
RA 244	2	4	4	2	4	4	1.5	3	3
RA 312	2.5	5	5	2.5	5	5	2.1	4.2	4.2
RA 313	2.4	4.8	4.8	2.4	4.8	4.8	2	4	4
RA 314	2.5	5	5	2.5	5	5	2.1	4.2	4.2
RA 512	2.6	5.2	5.2	2.6	5.2	5.2	2.2	4.4	4.4
RA 513	2.5	5	5	2.5	5	5	2.1	4.2	4.2
RA 514	2.6	5.2	5.2	2.6	5.2	5.2	2.3	4.6	4.6
RA 612	2.7	5.4	5.4	2.7	5.4	5.4	2.3	4.6	4.6
RA 613	2.9	5.8	5.8	2.9	5.8	5.8	2.5	5	5
RA 614	2.7	5.4	5.4	2.7	5.4	5.4	2.4	4.8	4.8
RA 812	3.8	7.6	7.6	3.8	7.6	7.6	3.5	7	7
RA 813	3.1	6.2	6.2	3.1	6.2	6.2	2.8	5.6	5.6
RA 814	3	6	6	3	6	6	2.7	5.4	5.4
RA 1022	4.4	8.8	8.8	4.4	8.8	8.8	4.1	8.2	8.2
RA 1023	3.7	7.4	7.4	3.7	7.4	7.4	3.4	6.8	6.8
RA 1024	3.5	7	7	3.5	7	7	3.2	6.4	6.4

dinamic oil

[Liters]	B5-1	V1	V3
		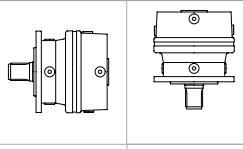	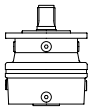
RA 1522	5.7	11.4	11.4
RA 1523	4.1	8.2	8.2
RA 1524	4	8	8
RA 2002	5.7	11.4	11.4
RA 2003	4.1	8.2	8.2
RA 2004	4.1	8.2	8.2
RA 2003L	4.1	8.2	8.2
RA 2004L	3.9	7.8	7.8
RA 2522	10.7	21.4	21.4
RA 2523	11	22	22
RA 2524	10.5	21	21
RA 3002	10.6	21.2	21.2
RA 3003	11.1	22.2	22.2
RA 3004	10.6	21.2	21.2
RA 3512	14.9	29.8	29.8
RA 3513	7.7	15.4	15.4
RA 3514	7.1	14.2	14.2
RA 4802	14.7	29.4	29.4
RA 4803	9.8	19.6	19.6
RA 4804	8.3	16.6	16.6
RA 6002	17.5	35	35
RA 6003	11.5	23	23
RA 6004	10.1	20.2	20.2
RA 6003L	11.5	23	23
RA 6004L	10.1	20.2	20.2
RA 8002	18.3	36.6	36.6
RA 8003	13.2	26.4	26.4
RA 8004	13	26	26
RA 8003L	13.2	26.4	26.4
RA 8004L	12.8	25.6	25.6
GBA 12013	18.5	37	37
GBA 12014	18.5	37	37
GBA 12015	17.9	35.8	35.8
GBA 12013L	18.5	37	37
GBA 12014L	18.3	36.6	36.6
GBA 12015L	18	36	36
GBA 16003	28	56	56
GBA 16004	22.2	44.4	44.4
GBA 16005	20.7	41.4	41.4

[Liters]	B5-1	V1	V3
	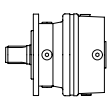	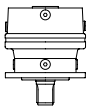	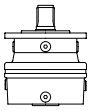
GBA 16003L	27	54	54
GBA 16004L	21	42	42
GBA 16005L	19.6	39.2	39.2
GBA 21003	33.5	67	67
GBA 21004	27.5	55	55
GBA 21005	26.1	52.2	52.2
GBA 26003	35.5	71	71
GBA 26004	30.5	61	61
GBA 26005	30.5	61	61
GBA 31004	51.5	103	103
GBA 31005	51.5	103	103
GBA 40004	54	108	108
GBA 40005	54	108	108
GBA 45004	63.5	127	127
GBA 45005	58.5	117	117
GBA 53004	96.5	193	193
GBA 53005	90	180	180
GBA 61004	95	190	190
GBA 61005	89.5	179	179
GBA 61006	88	176	176
GBA 85004	103	206	206
GBA 85005	98	196	196
GBA 85006	97	194	194
GBA 110005	186	372	372
GBA 110006	187	374	374
GBA 130005	380	760	388
GBA 130006	189	378	378

CC		
[Liters]	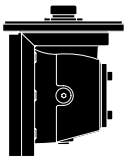	
CC30	1.6	**Complete filling**
CC120	2.2	
CC350	4	
CC600	6	
CC1000	16	

kg	P	T	TL	TR	F	N	H
	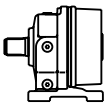	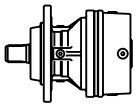	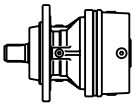	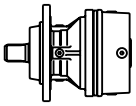	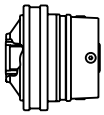	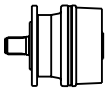	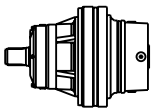
RE 111	23	20	—	20	14	17	—
RE 112	29.5	26.5	—	26.5	21	24	—
RE 113	36.5	33.5	—	33.5	27.5	30.5	—
RE 114	43	40	—	40	34	37	—
RE 211	25	22	—	22	16	19	—
RE 212	32	29	—	29	23	26	—
RE 213	38	35	—	35	30	32	—
RE 214	45	42	—	42	37	39	—
RE 241	25	—	—	22	—	—	—
RE 242	32	—	—	29	—	—	—
RE 243	38	—	—	35	—	—	—
RE 244	45	—	—	42	—	—	—
RE 311	52	47	47	—	24	35	—
RE 312	59	54	54	—	31	42	—
RE 313	66	61	61	—	38	49	—
RE 314	72	67	66	—	45	56	—
RE 511	57	52	52	—	29	40	—
RE 512	66	61	61	—	38	49	—
RE 513	73	68	68	—	45	56	—
RE 514	80	75	75	—	52	63	—
RE 611	58	53	53	—	30	41	—
RE 612	72	67	67	—	44	55	—
RE 613	79	74	74	—	51	62	—
RE 614	86	81	81	—	58	69	—
RE 811	80	70	—	—	—	67	—
RE 812	94	84	—	—	—	80	—
RE 813	100	90	—	—	—	87	—
RE 814	107	97	—	—	—	94	—
RE 1021	100	90	—	—	60	—	—
RE 1022	117	107	—	—	77	—	—

kg	P	T	TL	TR	F	N	H
	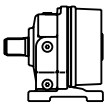	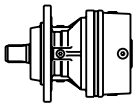	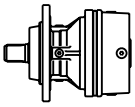	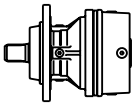	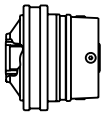	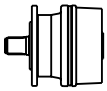	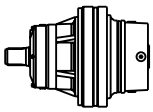
RE 1023	126	116	—	—	86	—	—
RE 1024	133	123	—	—	93	—	—
RE 1521	—	123	—	—	84	—	130
RE 1522	—	141	—	—	102	—	148
RE 1523	—	149	—	—	110	—	156
RE 1524	—	156	—	—	117	—	163
RE 2001	—	124	—	—	85	—	131
RE 2002	—	142	—	—	104	—	150
RE 2003	—	156	—	—	118	—	163
RE 2004	—	163	—	—	125	—	170
RE 2002L	—	137	—	—	99	—	145
RE 2003L	—	149	—	—	111	—	156
RE 2004L	—	153	—	—	115	—	160
RE 2521	—	—	—	—	151	—	185
RE 2522	—	—	—	—	180	—	214
RE 2523	—	—	—	—	194	—	228
RE 2524	—	—	—	—	201	—	235
RE 3001	—	—	—	—	152	—	186
RE 3002	—	—	—	—	199	—	233
RE 3003	—	—	—	—	207	—	241
RE 3004	—	—	—	—	216	—	250
RE 3511	—	—	—	—	225	—	239
RE 3512	—	—	—	—	260	—	274
RE 3513	—	—	—	—	278	—	292
RE 3514	—	—	—	—	287	—	301
RE 4801	—	—	—	—	226	—	240
RE 4802	—	—	—	—	311	—	325
RE 4803	—	—	—	—	330	—	344
RE 4804	—	—	—	—	339	—	353

kg	H 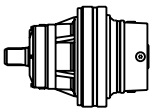	F 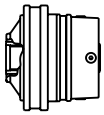
RE 6002L	365	340
RE 6003L	375	350
RE 6004L	382	357
RE 6001	315	290
RE 6002	370	345
RE 6003	390	365
RE 6004	395	370
RE 8001	410	380
RE 8002	500	470
RE 8003	540	510
RE 8004	555	525
RE 8005	560	530
RE 8002L	485	455
RE 8003L	520	490
RE 8004L	530	500
RE 8005L	535	505
GB 12011	650	615
GB 12012	750	715
GB 12013	785	750
GB 12014	800	765
GB 12015	810	775
GB 12012L	700	665
GB 12013L	745	710
GB 12014L	750	715
GB 12015L	757	722
GB 16001	690	655
GB 16002	860	825
GB 16003	915	880
GB 16004	935	900
GB 16005	940	905
GB 16002L	860	825
GB 16003L	865	830
GB 16004L	885	850
GB 16005L	890	855
GB 21001	930	880
GB 21002	1115	1065
GB 21003	1165	1115
GB 21004	1190	1140
GB 21005	1205	1155
GB 26001	980	920
GB 26002	1230	1170
GB 26003	1330	1270
GB 26004	1360	1300
GB 26005	1380	1320
GB 31001	1900	1750
GB 31002	2280	2130
GB 31003	2375	2225
GB 31004	2410	2260
GB 31005	2425	2275
GB 40001	2030	1880

kg	H 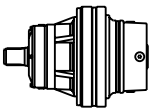	F 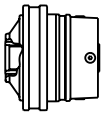
GB 40002	2400	2250
GB 40003	2500	2350
GB 40004	2530	2380
GB 40005	2540	2390
GB 45001	2030	1880
GB 45002	2435	2285
GB 45003	2610	2460
GB 45004	2665	2515
GB 45005	2682	2532
GB 53001	3550	3200
GB 53002	4060	3710
GB 53003	4250	3900
GB 53004	4350	4000
GB 53005	4370	4020
GB 61001	3550	3200
GB 61002	4060	3710
GB 61003	4250	3900
GB 61004	4350	4000
GB 61005	4370	4020
GB 85001	3850	3450
GB 85002	4410	4010
GB 85003	4650	4250
GB 85004	4750	4350
GB 85005	4785	4385
GB 110001	7520	6620
GB 110002	8780	7880
GB 110003	9155	8255
GB 110004	9250	8350
GB 110005	9285	8385
GB 130001	7535	6635
GB 130002	8800	7900
GB 130003	9210	8310
GB 130004	9380	8480
GB 130005	9430	8530
GB 150001	7550	6650
GB 150002	8795	7895
GB 150003	9280	8380
GB 150004	9460	8560
GB 150005	9500	8600
GB 205001	12240	11790
GB 205002	14330	13880
GB 205003	15040	14590
GB 205004	15410	14960
GB 205005	15500	15050
GB 235001	12250	11800
GB 235002	14580	14130
GB 235003	15830	15380
GB 235004	16200	15750
GB 235005	16300	15850

kg	P	T	TL	TR	F	N	H
	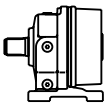	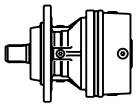	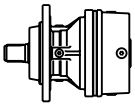	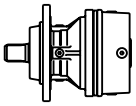	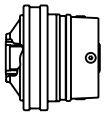	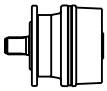	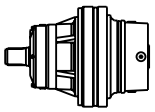
RA 112	43	40	—	40	34	37	—
RA 113	49.5	46.5	—	46.5	41	44	—
RA 114	56.5	53.5	—	53.5	47.5	50.5	—
RA 212	45	42	—	42	36	39	—
RA 213	52	49	—	49	43	46	—
RA 214	58	55	—	55	50	52	—
RA 242	45	—	—	42	—	—	—
RA 243	52	—	—	49	—	—	—
RA 244	58	—	—	55	—	—	—
RA 312	102	97	97	—	74	85	—
RA 313		74	74	—	51	62	—
RA 314	86	81	81	—	58	69	—
RA 512	107	102	102	—	79	90	—
RA 513	86	81	81	—	58	69	—
RA 514	93	88	88	—	65	76	—
RA 612	108	103	103	—	80	91	—
RA 613	122	117	117	—	94	105	—
RA 614	99	94	94	—	71	82	—
RA 812	170	160	—	—	—	157	—
RA 813	144	134	—	—	—	130	—
RA 814	120	110	—	—	—	107	—
RA 1022	190	180	—	—	150	—	—
RA 1023	167	157	—	—	127	—	—
RA 1024	146	136	—	—	106	—	—
RA 1522	—	258	—	—	219	—	265
RA 1523	—	191	—	—	152	—	198
RA 1524	—	169	—	—	130	—	176
RA 2002	—	259	—	—	220	—	266
RA 2003	—	192	—	—	154	—	200
RA 2004	—	176	—	—	138	—	183
RA 2003L	—	187	—	—	149	—	195
RA 2004L	—	169	—	—	131	—	176
RA 2522	—	—	—	—	286	—	320
RA 2523	—	—	—	—	270	—	304
RA 2524	—	—	—	—	214	—	248
RA 3002	—	—	—	—	287	—	321
RA 3003	—	—	—	—	289	—	323
RA 3004	—	—	—	—	257	—	291
RA 3512	—	—	—	—	575	—	589
RA 3513	—	—	—	—	350	—	364
RA 3514	—	—	—	—	398	—	412
RA 4802	—	—	—	—	576	—	590
RA 4803	—	—	—	—	446	—	460
RA 4804	—	—	—	—	380	—	394

	H	F
kg	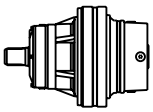	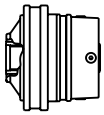
RA 6002	665	640
RA 6003	505	480
RA 6004	440	415
RA 6003L	500	475
RA 6004L	425	400
RA 8002	760	730
RA 8003	635	605
RA 8004	630	600
RA 8003L	620	590
RA 8004L	610	580
GBA 12013	885	850
GBA 12014	875	840
GBA 12015	850	815
GBA 12013L	835	800
GBA 12014L	835	800
GBA 12015L	800	765
GBA 16003	1210	1175
GBA 16004	1050	1015
GBA 16005	985	950
GBA 16003L	1210	1175
GBA 16004L	1000	965
GBA 16005L	935	900
GBA 21003	1465	1415
GBA 21004	1300	1250
GBA 21005	1240	1190
GBA 26003	1580	1520
GBA 26004	1465	1405
GBA 26005	1450	1390
GBA 31004	2510	2360
GBA 31005	2500	2350
GBA 40004	2635	2485
GBA 40005	2620	2470
GBA 45004	2960	2810
GBA 45005	2800	2650
GBA 53004	4600	4250
GBA 53005	4485	4135
GBA 61004	4600	4250
GBA 61005	4485	4135
GBA 61006	4420	4070
GBA 85004	5000	4600
GBA 85005	4885	4485
GBA 85006	4875	4475
GBA 110005	9385	8485
GBA 110006	9375	8475
GBA 130005	9730	8830
GBA 130006	9365	8665

	CC
kg	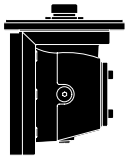
CC30	35
CC120	50
CC350	90
CC600	135
CC1000	350

RE 310

dinamic oil

		n_1= **750** RPM			n_1= **900** RPM			n_1= **1450** RPM			n_1= **2900** RPM				
	ie	**n_2** [RPM]	**P_1** [kW]	**T_2** [Nm]	**n_2** [RPM]	**P_1** [kW]	**T_2** [Nm]	**n_2** [RPM]	**P_1** [kW]	**T_2** [Nm]	**n_2** [RPM]	**P_1** [kW]	**T_2** [Nm]	**T_{2max}** [Nm]	**P_t** [kW]
RE 311	**3.60**	208	***43.9***	1960	250	***49.9***	1860	403	***70***	1610	806	***113***	1310	4320	18 (N) 22 (T) 13 (F) 36 (P)
	4.25	176	***38.5***	2030	212	***43.8***	1920	341	***61***	1670	682	***99***	1350	5630	
	5.33	141	***25.3***	1680	169	***30.1***	1660	272	***47.1***	1610	544	***82***	1410	4610	
	6.20	121	***18.4***	1410	145	***21.8***	1400	234	***34.2***	1360	468	***66***	1310	3900	
	7.50	100	***11.9***	1110	120	***14.2***	1100	193	***22.2***	1070	387	***42.7***	1030	3070	
RE 312	**12.53**	60	***14.9***	2260	72	***17.3***	2180	116	***24.1***	1890	231	***39.2***	1540	4320	10 (N) 12 (T) 8 (F) 21 (P)
	14.79	51	***12.3***	2200	61	***14.6***	2180	98	***22.9***	2120	196	***39.2***	1810	5630	
	15.35	48.9	***12.3***	2280	59	***14.6***	2260	94	***20.6***	1980	189	***33.5***	1610	4320	
	18.12	41.4	***10.2***	2230	49.7	***12.1***	2210	80	***18.9***	2150	160	***33.5***	1900	5630	
	20.77	36.1	***6.8***	1720	43.3	***8.1***	1700	70	***12.7***	1650	140	***24.5***	1590	4320	
	22.74	33.0	***6.6***	1820	39.6	***7.9***	1800	64	***12.3***	1750	128	***23.7***	1690	4610	
	24.52	30.6	***6.8***	2030	36.7	***8.1***	2010	59	***12.7***	1950	118	***24.5***	1880	5960	
	26.43	28.4	***4.8***	1540	34.1	***5.7***	1520	55	***8.9***	1480	110	***17.2***	1420	3900	
	30.77	24.4	***5.0***	1850	29.3	***5.9***	1830	47.1	***9.3***	1780	94	***17.8***	1720	4610	
	35.77	21.0	***3.6***	1560	25.2	***4.3***	1550	40.5	***6.7***	1510	81	***12.9***	1450	3900	
	38.40	19.5	***3.9***	1830	23.4	***4.7***	1810	37.8	***7.3***	1760	76	***14.1***	1690	4610	
	44.64	16.8	***2.9***	1580	20.2	***3.5***	1570	32.5	***5.5***	1520	65	***10.5***	1470	3900	
	54.00	13.9	***1.9***	1240	16.7	***2.3***	1230	26.9	***3.5***	1200	54	***6.8***	1150	3070	
RE 313	**43.60**	17.2	***4.7***	2420	20.6	***5.6***	2400	33.3	***8.8***	2330	67	***16.8***	2230	4320	8 (N) 9 (T) 6 (F) 15 (P)
	51.47	14.6	***3.9***	2370	17.5	***4.6***	2340	28.2	***7.3***	2280	56	***13.9***	2190	5630	
	53.41	14.0	***3.9***	2450	16.9	***4.6***	2430	27.1	***7.2***	2360	54	***13.9***	2270	4320	
	63.05	11.9	***3.2***	2390	14.3	***3.8***	2370	23.0	***6.0***	2310	46.0	***11.5***	2220	5630	
	72.28	10.4	***2.9***	2500	12.5	***3.5***	2470	20.1	***5.4***	2400	40.1	***10.5***	2310	4320	
	77.24	9.7	***2.7***	2420	11.7	***3.2***	2400	18.8	***4.9***	2330	37.5	***9.5***	2240	5630	
	85.33	8.8	***2.4***	2440	10.5	***2.9***	2410	17.0	***4.5***	2350	34.0	***8.7***	2250	5630	
	104.53	7.2	***2.0***	2510	8.6	***2.4***	2440	13.9	***3.7***	2370	27.7	***7.2***	2280	5630	
	106.49	7.0	***2.0***	2510	8.5	***2.3***	2440	13.6	***3.7***	2380	27.2	***7.0***	2280	5630	
	130.45	5.7	***1.7***	2590	6.9	***2.0***	2520	11.1	***3.0***	2400	22.2	***5.8***	2310	5630	
	141.46	5.3	***1.3***	2240	6.4	***1.6***	2220	10.3	***2.5***	2160	20.5	***4.8***	2080	5960	
	163.71	4.6	***1.1***	2100	5.5	***1.3***	2050	8.9	***2.0***	1960	17.7	***3.8***	1890	4610	
	176.54	4.2	***1.1***	2270	5.1	***1.3***	2250	8.2	***2.0***	2190	16.4	***3.9***	2100	5960	
	190.31	3.9	***0.79***	1770	4.7	***0.92***	1720	7.6	***1.4***	1660	15.2	***2.7***	1590	3900	
	221.54	3.4	***0.84***	2200	4.1	***0.98***	2140	6.5	***1.5***	2000	13.1	***2.8***	1920	4610	
	257.54	2.9	***0.61***	1850	3.5	***0.71***	1800	5.6	***1.1***	1680	11.3	***2.1***	1620	3900	
	276.48	2.7	***0.63***	2040	3.3	***0.74***	2020	5.2	***1.2***	1970	10.5	***2.2***	1890	4610	
	321.41	2.3	***0.50***	1920	2.8	***0.59***	1860	4.5	***0.88***	1730	9.0	***1.7***	1640	3900	
RE 314	**219.42**	3.4	***1.1***	2800	4.1	***1.30***	2730	6.6	***1.9***	2540	13.2	***3.6***	2380	5630	6 (N) 7 (T) 5 (F) 12 (P)
	268.80	2.8	***0.93***	2890	3.3	***1.09***	2810	5.4	***1.6***	2620	10.8	***3.0***	2410	5630	
	296.94	2.5	***0.86***	2930	3.0	***1.00***	2850	4.9	***1.5***	2660	9.8	***2.7***	2420	5630	
	329.29	2.3	***0.79***	2980	2.7	***0.92***	2900	4.4	***1.4***	2700	8.8	***2.5***	2440	5630	
	363.76	2.1	***0.72***	3030	2.5	***0.84***	2940	4.0	***1.3***	2740	8.0	***2.3***	2470	5630	
	416.98	1.8	***0.61***	2930	2.2	***0.71***	2850	3.5	***1.1***	2680	7.0	***2.1***	2580	4320	
	453.98	1.7	***0.60***	3130	2.0	***0.70***	3040	3.2	***1.0***	2830	6.4	***1.9***	2550	5630	
	492.27	1.5	***0.56***	3170	1.8	***0.65***	3080	2.9	***0.98***	2870	5.9	***1.8***	2580	5630	
	556.14	1.3	***0.50***	3230	1.6	***0.59***	3140	2.6	***0.88***	2920	5.2	***1.6***	2630	5630	
	614.35	1.2	***0.46***	3280	1.5	***0.54***	3190	2.4	***0.81***	2960	4.7	***1.5***	2670	5630	
	766.71	0.98	***0.38***	3390	1.2	***0.45***	3290	1.9	***0.67***	3070	3.8	***1.2***	2760	5630	
	795.61	0.94	***0.35***	3190	1.1	***0.41***	3100	1.8	***0.61***	2880	3.6	***1.1***	2700	4320	
	939.26	0.80	***0.32***	3490	0.96	***0.38***	3400	1.5	***0.57***	3160	3.1	***1.0***	2850	5630	
	1018.49	0.74	***0.23***	2660	0.88	***0.27***	2590	1.4	***0.40***	2420	2.8	***0.77***	2320	5960	
	1178.68	0.64	***0.21***	2840	0.76	***0.24***	2760	1.2	***0.37***	2570	2.5	***0.66***	2310	4610	
	1271.08	0.59	***0.19***	2750	0.71	***0.22***	2680	1.1	***0.33***	2490	2.3	***0.62***	2350	5960	
	1595.08	0.47	***0.16***	2970	0.56	***0.19***	2890	0.91	***0.28***	2690	1.8	***0.51***	2420	4610	
	1990.66	0.38	***0.11***	2470	0.45	***0.13***	2400	0.73	***0.19***	2230	1.5	***0.36***	2120	4610	

		n_1= **750** RPM			n_1= **900** RPM			n_1= **1450** RPM			n_1= **2900** RPM				
	ie	**n_2** [RPM]	**P_1** [kW]	**T_2** [Nm]	**n_2** [RPM]	**P_1** [kW]	**T_2** [Nm]	**n_2** [RPM]	**P_1** [kW]	**T_2** [Nm]	**n_2** [RPM]	**P_1** [kW]	**T_2** [Nm]	**T_{2max}** [Nm]	**P_t** [kW]
RA 312	**10.03**	75	***18.6***	2230	90	***22.1***	2200	145	***34.7***	2150	289	***58***	1780	4320	10 (N) 12 (T) 8 (F) 17 (P)
	11.84	63	***15.4***	2180	76	***18.3***	2150	122	***28.7***	2100	245	***50***	1840	5630	
	14.40	52	***13.3***	2270	63	***15.7***	2250	101	***24.7***	2190	201	***44.7***	1980	4320	
	17.00	44.1	***11.0***	2220	53	***13.0***	2200	85	***20.4***	2140	171	***39.2***	2050	5630	
	21.33	35.2	***7.1***	1810	42.2	***8.5***	1800	68	***13.3***	1750	136	***25.5***	1680	4610	
	24.80	30.2	***5.2***	1530	36.3	***6.1***	1510	58	***9.6***	1470	117	***18.5***	1420	3900	
	30.00	25.0	***3.4***	1200	30.0	***4.0***	1190	48.3	***6.3***	1160	97	***12.0***	1110	3070	
RA 313	**40.09**	18.7	***5.2***	2410	22.4	***6.1***	2390	36.2	***9.6***	2320	72	***18.1***	2180	4320	6 (N) 7 (T) 5 (F) 11 (P)
	47.33	15.8	***4.3***	2360	19.0	***5.1***	2330	30.6	***8.0***	2270	61	***15.3***	2180	5630	
	49.11	15.3	***4.3***	2440	18.3	***5.1***	2410	29.5	***8.0***	2350	59	***15.3***	2260	4320	
	57.98	12.9	***3.5***	2380	15.5	***4.2***	2360	25.0	***6.6***	2290	50	***12.7***	2210	5630	
	66.46	11.3	***2.4***	1840	13.5	***2.8***	1820	21.8	***4.4***	1770	43.6	***8.5***	1700	4730	
	72.76	10.3	***2.3***	1950	12.4	***2.7***	1930	19.9	***4.3***	1870	39.9	***8.2***	1800	4610	
	78.46	9.6	***2.4***	2170	11.5	***2.8***	2150	18.5	***4.4***	2090	37.0	***8.5***	2010	5590	
	84.58	8.9	***1.7***	1640	10.6	***2.0***	1620	17.1	***3.1***	1580	34.3	***6.0***	1520	3900	
	98.46	7.6	***1.7***	1980	9.1	***2.1***	1960	14.7	***3.2***	1910	29.5	***6.2***	1830	4610	
	114.46	6.6	***1.3***	1670	7.9	***1.5***	1650	12.7	***2.3***	1610	25.3	***4.5***	1550	3900	
	122.88	6.1	***1.4***	1950	7.3	***1.6***	1930	11.8	***2.5***	1880	23.6	***4.9***	1810	4610	
	142.85	5.3	***1.0***	1690	6.3	***1.2***	1670	10.2	***1.9***	1630	20.3	***3.6***	1570	3900	
	172.80	4.3	***0.66***	1330	5.2	***0.79***	1320	8.4	***1.23***	1280	16.8	***2.37***	1230	3070	
RA 314	**139.51**	5.4	***1.7***	2620	6.5	***2.0***	2590	10.4	***3.1***	2500	20.8	***5.9***	2400	4320	5 (N) 6 (T) 4 (F) 10 (P)
	164.70	4.6	***1.4***	2680	5.5	***1.7***	2610	8.8	***2.5***	2440	17.6	***4.9***	2340	5630	
	170.91	4.4	***1.4***	2680	5.3	***1.6***	2650	8.5	***2.6***	2580	17.0	***4.8***	2430	4320	
	201.77	3.7	***1.2***	2770	4.5	***1.4***	2690	7.2	***2.1***	2500	14.4	***4.0***	2370	5630	
	231.29	3.2	***1.0***	2690	3.9	***1.2***	2670	6.3	***1.9***	2590	13.9	***3.6***	2470	4320	
	247.17	3.0	***1.0***	2850	3.6	***1.2***	2780	5.9	***1.8***	2580	11.7	***3.3***	2400	5630	
	273.05	2.7	***0.94***	2900	3.3	***1.1***	2820	5.3	***1.6***	2620	10.6	***3.0***	2410	5630	
	310.18	2.4	***0.66***	2320	2.9	***0.77***	2250	4.7	***1.15***	2100	9.3	***2.15***	1960	4610	
	340.76	2.2	***0.78***	3000	2.6	***0.91***	2910	4.3	***1.36***	2710	8.5	***2.45***	2440	5630	
	417.45	1.8	***0.65***	3090	2.2	***0.76***	3010	3.5	***1.14***	2800	6.9	***2.06***	2520	5630	
	452.66	1.7	***0.47***	2400	2.0	***0.55***	2370	3.2	***0.87***	2310	6.4	***1.67***	2220	5590	
	497.11	1.5	***0.36***	2050	1.8	***0.42***	1990	2.9	***0.64***	1850	5.8	***1.15***	1680	3900	
	564.92	1.3	***0.38***	2430	1.6	***0.45***	2400	2.6	***0.71***	2340	5.1	***1.36***	2250	5590	
	608.98	1.2	***0.31***	2110	1.5	***0.36***	2050	2.4	***0.54***	1910	4.8	***0.96***	1720	3900	
	708.92	1.1	***0.33***	2630	1.3	***0.38***	2560	2.0	***0.57***	2380	4.1	***1.03***	2140	4610	
	824.12	0.91	***0.24***	2210	1.1	***0.28***	2150	1.8	***0.41***	2000	3.5	***0.75***	1800	3900	
	884.74	0.85	***0.22***	2190	1.0	***0.26***	2160	1.6	***0.41***	2100	3.3	***0.78***	2020	4610	
	1028.51	0.73	***0.20***	2280	0.88	***0.23***	2220	1.4	***0.34***	2070	2.8	***0.62***	1860	3900	
	1244.16	0.60	***0.13***	1790	0.72	***0.15***	1740	1.2	***0.22***	1620	2.3	***0.40***	1460	3070	

RE 510

dinamic oil

		n_1= **750** RPM			n_1= **900** RPM			n_1= **1450** RPM			n_1= **2900** RPM				
	ie	**n_2** [RPM]	**P_1** [kW]	**T_2** [Nm]	**n_2** [RPM]	**P_1** [kW]	**T_2** [Nm]	**n_2** [RPM]	**P_1** [kW]	**T_2** [Nm]	**n_2** [RPM]	**P_1** [kW]	**T_2** [Nm]	**T_{2max}** [Nm]	**P_t** [kW]
RE 511	**3.60**	208	***76***	3400	250	***86***	3220	403	***121***	2790	806	***196***	2260	11600	19 (N) 24 (T) 14 (F) 37 (P)
	4.25	176	***67***	3520	212	***76***	3330	341	***106***	2890	682	***172***	2340	11600	
	5.33	141	***52***	3450	169	***62***	3420	272	***88***	3010	544	***143***	2440	9500	
	6.20	121	***37.9***	2920	145	***45.1***	2890	234	***71***	2810	468	***127***	2530	8050	
	7.50	100	***24.6***	2290	120	***29.2***	2260	193	***45.8***	2200	387	***88***	2120	6320	
RE 512	**12.53**	60	***27.2***	4120	72	***30.9***	3900	116	***43.1***	3380	231	***70***	2750	11600	11 (N) 13 (T) 8 (F) 21 (P)
	14.79	51	***25.4***	4540	61	***30.1***	4500	98	***43.1***	3990	196	***70***	3240	11600	
	15.35	48.9	***23.2***	4320	59	***26.4***	4090	94	***36.9***	3540	189	***60***	2880	11600	
	18.12	41.4	***21.0***	4600	49.7	***24.9***	4550	80	***36.9***	4180	160	***60***	3400	11600	
	20.77	36.1	***13.8***	3470	43.3	***16.4***	3430	70	***25.7***	3340	140	***46.9***	3050	9540	
	22.74	33.0	***13.6***	3750	39.6	***16.2***	3710	64	***25.4***	3610	128	***48.8***	3470	9500	
	24.52	30.6	***13.8***	4090	36.7	***16.4***	4050	59	***25.7***	3940	118	***46.9***	3600	11300	
	26.43	28.4	***9.9***	3170	34.1	***11.8***	3140	55	***18.5***	3060	110	***35.5***	2940	8050	
	30.77	24.4	***10.2***	3820	29.3	***12.2***	3780	47.1	***19.1***	3680	94	***36.7***	3530	9500	
	35.77	21.0	***7.5***	3230	25.2	***8.9***	3190	40.5	***13.9***	3110	81	***26.7***	2990	8050	
	38.40	19.5	***8.0***	3700	23.4	***9.4***	3660	37.8	***14.8***	3560	76	***28.5***	3420	9500	
	44.64	16.8	***6.0***	3270	20.2	***7.2***	3230	32.5	***11.3***	3150	65	***21.7***	3030	8050	
	54.00	13.9	***3.9***	2560	16.7	***4.7***	2530	26.9	***7.3***	2470	54	***14.0***	2370	6320	
RE 513	**43.60**	17.2	***9.5***	4870	20.6	***11.2***	4820	33.3	***17.6***	4690	67	***30.0***	3990	11600	8 (N) 10 (T) 6 (F) 15 (P)
	51.47	14.6	***8.0***	4880	17.5	***9.5***	4830	28.2	***15.0***	4700	56	***28.7***	4520	11600	
	53.41	14.0	***7.8***	4920	16.9	***9.3***	4870	27.1	***14.5***	4740	54	***25.7***	4180	11600	
	63.05	11.9	***6.6***	4940	14.3	***7.9***	4880	23.0	***12.3***	4750	46.0	***23.7***	4570	11600	
	72.28	10.4	***5.9***	5020	12.5	***7.0***	4960	20.1	***10.9***	4820	40.1	***21.0***	4640	11600	
	77.24	9.7	***5.5***	4990	11.7	***6.5***	4940	18.8	***10.2***	4810	37.5	***19.6***	4620	11600	
	85.33	8.8	***5.0***	5020	10.5	***5.9***	4970	17.0	***9.3***	4840	34.0	***17.8***	4650	11600	
	104.53	7.2	***4.2***	5160	8.6	***4.9***	5030	13.9	***7.7***	4890	27.7	***14.7***	4700	11600	
	110.50	6.8	***4.0***	5220	8.1	***4.8***	5170	13.1	***7.3***	4940	26.2	***14.1***	4750	11600	
	130.45	5.7	***3.5***	5340	6.9	***4.0***	5200	11.1	***6.2***	4960	22.2	***12.0***	4760	11600	
	141.46	5.3	***2.7***	4520	6.4	***3.2***	4480	10.3	***5.0***	4360	20.5	***9.7***	4190	11300	
	163.71	4.6	***2.2***	4330	5.5	***2.6***	4220	8.9	***4.0***	4040	17.7	***7.8***	3890	9500	
	176.54	4.2	***2.2***	4580	5.1	***2.6***	4530	8.2	***4.1***	4410	16.4	***7.9***	4240	11300	
	190.31	3.9	***1.6***	3650	4.7	***1.9***	3550	7.6	***2.9***	3420	15.2	***5.7***	3290	8050	
	221.54	3.4	***1.7***	4540	4.1	***2.0***	4410	6.5	***3.0***	4120	13.1	***5.8***	3960	9500	
	257.54	2.9	***1.3***	3830	3.5	***1.5***	3720	5.6	***2.2***	3480	11.3	***4.3***	3340	8050	
	276.48	2.7	***1.3***	4140	3.3	***1.5***	4100	5.2	***2.4***	3990	10.5	***4.5***	3830	9500	
	321.41	2.3	***1.0***	3960	2.8	***1.2***	3850	4.5	***1.8***	3580	9.0	***3.5***	3390	8050	
RE 514	**219.42**	3.4	***2.3***	5780	4.1	***2.7***	5620	6.6	***4.0***	5230	13.2	***7.5***	4910	11600	7 (N) 8 (T) 5 (F) 12 (P)
	268.80	2.8	***1.9***	5960	3.3	***2.2***	5800	5.4	***3.4***	5390	10.8	***6.2***	4960	11600	
	296.94	2.5	***1.8***	6050	3.0	***2.1***	5880	4.9	***3.1***	5470	9.8	***5.6***	4990	11600	
	329.29	2.3	***1.6***	6140	2.7	***1.9***	5980	4.4	***2.8***	5560	8.8	***5.1***	5020	11600	
	363.76	2.1	***1.5***	6240	2.5	***1.7***	6070	4.0	***2.6***	5650	8.0	***4.7***	5080	11600	
	416.98	1.8	***1.3***	6100	2.2	***1.5***	5940	3.5	***2.2***	5580	7.0	***4.3***	5340	11600	
	453.98	1.7	***1.2***	6450	2.0	***1.4***	6270	3.2	***2.2***	5840	6.4	***3.9***	5260	11600	
	492.27	1.5	***1.2***	6530	1.8	***1.3***	6350	2.9	***2.0***	5910	5.9	***3.6***	5320	11600	
	556.14	1.3	***1.0***	6650	1.6	***1.2***	6470	2.6	***1.8***	6020	5.2	***3.3***	5420	11600	
	614.35	1.2	***0.96***	6750	1.5	***1.1***	6570	2.4	***1.7***	6110	4.7	***3.0***	5500	11600	
	766.71	0.98	***0.64***	5670	1.2	***0.76***	5610	1.9	***1.2***	5460	3.8	***2.3***	5250	11600	
	939.26	0.80	***0.64***	6950	0.96	***0.76***	6880	1.5	***1.2***	6520	3.1	***2.1***	5870	11600	
	1018.49	0.74	***0.46***	5370	0.88	***0.53***	5220	1.4	***0.80***	4880	2.8	***1.5***	4690	11300	
	1178.68	0.64	***0.43***	5840	0.76	***0.50***	5680	1.2	***0.75***	5290	2.5	***1.4***	4760	9500	
	1271.08	0.59	***0.38***	5550	0.71	***0.44***	5400	1.1	***0.66***	5030	2.3	***1.3***	4750	11300	
	1595.08	0.47	***0.33***	6120	0.56	***0.39***	5950	0.91	***0.58***	5540	1.8	***1.1***	4990	9500	
	1854.28	0.40	***0.24***	5160	0.49	***0.28***	5020	0.78	***0.42***	4670	1.6	***0.76***	4200	8050	
	1990.66	0.38	***0.22***	5000	0.45	***0.25***	4860	0.73	***0.38***	4520	1.5	***0.72***	4290	9500	

RA 510

		n_1= **750** RPM			n_1= **900** RPM			n_1= **1450** RPM			n_1= **2900** RPM				
	ie	**n_2** [RPM]	**P_1** [kW]	**T_2** [Nm]	**n_2** [RPM]	**P_1** [kW]	**T_2** [Nm]	**n_2** [RPM]	**P_1** [kW]	**T_2** [Nm]	**n_2** [RPM]	**P_1** [kW]	**T_2** [Nm]	**T_{2max}** [Nm]	**P_t** [kW]
RA 512	**10.03**	75	***27.1***	3240	90	***30.8***	3070	145	***43.0***	2660	289	***70***	2160	11600	10 (N) 12 (T) 9 (F) 17 (P)
	11.84	63	***27.1***	3820	76	***30.8***	3620	122	***43.0***	3140	245	***70***	2550	11600	
	14.40	52	***20.0***	3440	63	***22.8***	3260	101	***31.8***	2820	201	***51.7***	2290	10000	
	17.00	44.1	***20.0***	4060	53	***22.8***	3840	85	***31.8***	3330	171	***51.7***	2710	11600	
	20.89	35.9	***9.7***	2430	43.1	***11.6***	2400	69	***18.1***	2340	139	***34.9***	2250	6320	
	21.33	35.2	***14.7***	3740	42.2	***17.5***	3700	68	***27.4***	3600	136	***51.7***	3400	9500	
	24.80	30.2	***10.7***	3160	36.3	***12.7***	3130	58	***19.9***	3040	117	***38.3***	2930	8050	
	30.00	25.0	***6.9***	2480	30.0	***8.2***	2450	48.3	***12.9***	2390	97	***24.8***	2290	6320	
RA 513	**40.09**	18.7	***7.3***	3390	22.4	***8.6***	3350	36.2	***12.7***	3070	72	***20.7***	2490	8660	7 (N) 9 (T) 5 (F) 12 (P)
	47.33	15.8	***7.3***	4000	19.0	***8.6***	3960	30.6	***12.7***	3630	61	***20.7***	2950	10300	
	49.11	15.3	***7.3***	4150	18.3	***8.6***	4110	29.5	***12.7***	3760	59	***20.7***	3060	10700	
	57.98	12.9	***7.3***	4900	15.5	***8.6***	4850	25.0	***12.7***	4440	50	***20.7***	3610	11600	
	66.46	11.3	***4.8***	3710	13.5	***5.7***	3670	21.8	***8.9***	3570	43.6	***17.2***	3430	9540	
	72.76	10.3	***4.7***	4010	12.4	***5.6***	3970	19.9	***8.8***	3860	39.9	***17.0***	3710	9500	
	78.46	9.6	***4.8***	4370	11.5	***5.7***	4330	18.5	***8.9***	4210	37.0	***17.2***	4050	11300	
	84.58	8.9	***3.4***	3390	10.6	***4.1***	3360	17.1	***6.4***	3270	34.3	***12.3***	3140	8050	
	98.46	7.6	***3.6***	4080	9.1	***4.2***	4040	14.7	***6.6***	3930	29.5	***12.8***	3780	9500	
	114.46	6.6	***2.6***	3450	7.9	***3.1***	3410	12.7	***4.8***	3320	25.3	***9.3***	3190	8050	
	122.88	6.1	***2.8***	3950	7.3	***3.3***	3910	11.8	***5.2***	3810	23.6	***9.9***	3660	9500	
	142.85	5.3	***2.1***	3500	6.3	***2.5***	3460	10.2	***3.9***	3360	20.3	***7.5***	3230	8050	
	172.80	4.3	***1.4***	2740	5.2	***1.6***	2710	8.4	***2.5***	2640	16.8	***4.9***	2530	6320	
RA 514	**139.51**	5.4	***3.4***	5440	6.5	***4.1***	5390	10.4	***6.1***	5020	20.8	***11.8***	4810	11600	6 (N) 7 (T) 5 (F) 11 (P)
	164.70	4.6	***3.0***	5530	5.5	***3.5***	5380	8.8	***5.2***	5020	17.6	***10.0***	4830	11600	
	170.91	4.4	***2.8***	5350	5.3	***3.3***	5300	8.5	***5.1***	5150	17.0	***9.7***	4870	11600	
	201.77	3.7	***2.5***	5710	4.5	***2.9***	5550	7.2	***4.4***	5160	14.4	***8.3***	4880	11600	
	231.29	3.2	***2.1***	5600	3.9	***2.5***	5540	6.3	***4.0***	5400	12.5	***7.3***	4950	11600	
	247.17	3.0	***2.1***	5880	3.6	***2.5***	5720	5.9	***3.7***	5320	11.7	***6.8***	4940	11600	
	273.05	2.7	***1.9***	5970	3.3	***2.3***	5810	5.3	***3.4***	5410	10.6	***6.2***	4970	11600	
	310.18	2.4	***1.4***	4770	2.9	***1.6***	4640	4.7	***2.4***	4320	9.3	***4.4***	4030	9500	
	340.76	2.2	***1.4***	5410	2.6	***1.7***	5360	4.3	***2.6***	5210	8.5	***5.0***	5010	11600	
	417.45	1.8	***1.3***	6370	2.2	***1.6***	6200	3.5	***2.4***	5760	6.9	***4.2***	5190	11600	
	452.66	1.7	***0.94***	4830	2.0	***1.1***	4780	3.2	***1.8***	4660	6.4	***3.4***	4480	11300	
	497.11	1.5	***0.75***	4230	1.8	***0.88***	4110	2.9	***1.3***	3820	5.8	***2.4***	3470	8050	
	564.92	1.3	***0.77***	4910	1.6	***0.91***	4850	2.6	***1.4***	4720	5.1	***2.7***	4530	11300	
	608.98	1.2	***0.63***	4360	1.5	***0.74***	4240	2.4	***1.1***	3940	4.8	***2.0***	3550	8050	
	708.92	1.1	***0.67***	5410	1.3	***0.79***	5260	2.0	***1.2***	4900	4.1	***2.1***	4410	9500	
	824.12	0.91	***0.49***	4560	1.1	***0.57***	4440	1.8	***0.85***	4130	3.5	***1.5***	3720	8050	
	884.74	0.85	***0.44***	4420	1.0	***0.52***	4380	1.6	***0.82***	4260	3.3	***1.6***	4100	9500	
	1028.51	0.73	***0.40***	4720	0.88	***0.47***	4590	1.4	***0.71***	4270	2.8	***1.3***	3840	8050	
	1244.16	0.60	***0.26***	3680	0.72	***0.31***	3580	1.2	***0.46***	3340	2.3	***0.82***	3000	6320	

RE 610

		n_1= **750** RPM			n_1= **900** RPM			n_1= **1450** RPM			n_1= **2900** RPM				
	ie	**n_2** [RPM]	**P_1** [kW]	**T_2** [Nm]	**n_2** [RPM]	**P_1** [kW]	**T_2** [Nm]	**n_2** [RPM]	**P_1** [kW]	**T_2** [Nm]	**n_2** [RPM]	**P_1** [kW]	**T_2** [Nm]	**T_{2max}** [Nm]	**P_t** [kW]
RE 611	**4.00**	188	***93***	4630	225	***106***	4380	363	***148***	3800	725	***240***	3080	14900	20 (N) 24 (T)
	4.55	165	***84***	4730	198	***95***	4480	319	***133***	3880	638	***216***	3160	12860	14 (F) 37 (P)
RE 612	**14.40**	52	***34.3***	5970	63	***40.7***	5910	101	***62***	5580	201	***100***	4530	14900	
	16.36	45.8	***26.8***	5320	55	***31.9***	5260	89	***50***	5120	177	***90***	4630	12860	
	17.00	44.1	***29.3***	6030	53	***34.8***	5970	85	***55***	5810	171	***89***	4760	14900	
	19.32	38.8	***23.0***	5370	46.6	***27.3***	5310	75	***42.7***	5170	150	***81***	4870	12860	15 (N)
	21.33	35.2	***23.6***	6110	42.2	***28.1***	6040	68	***44.0***	5880	136	***76***	5100	14900	14 (T) 9 (F)
	24.24	30.9	***18.5***	5440	37.1	***22.0***	5380	60	***34.5***	5240	120	***66***	5030	12860	22 (P)
	28.18	26.6	***16.1***	5490	31.9	***19.1***	5430	51	***29.9***	5280	103	***58***	5080	12860	
	30.00	25.0	***12.2***	4440	30.0	***14.5***	4400	48.3	***22.8***	4280	97	***43.8***	4110	12300	
	34.09	22.0	***12.2***	5050	26.4	***14.5***	5000	42.5	***22.8***	4860	85	***43.8***	4670	12860	
RE 613	**50.11**	15.0	***10.8***	6410	18.0	***12.9***	6350	28.9	***20.2***	6180	58	***38.8***	5940	14900	
	56.95	13.2	***8.5***	5710	15.8	***10.1***	5650	25.5	***15.8***	5500	51	***30.4***	5290	12860	
	61.39	12.2	***9.0***	6490	14.7	***10.6***	6420	23.6	***16.7***	6250	47.2	***32.0***	6000	14900	
	69.76	10.8	***7.0***	5780	12.9	***8.3***	5720	20.8	***13.1***	5560	41.6	***25.1***	5350	12860	
	82.36	9.1	***6.0***	5830	10.9	***7.1***	5770	17.6	***11.2***	5620	35.2	***21.5***	5400	12860	
	90.95	8.2	***6.2***	6630	9.9	***7.3***	6570	15.9	***11.5***	6390	31.9	***22.1***	6140	14900	9 (N)
	98.08	7.6	***5.8***	6660	9.2	***6.8***	6590	14.8	***10.7***	6420	29.6	***20.6***	6170	14900	10 (T) 7 (F)
	111.45	6.7	***4.5***	5930	8.1	***5.4***	5870	13.0	***8.4***	5710	26.0	***16.1***	5490	12860	17 (P)
	123.08	6.1	***4.7***	6830	7.3	***5.5***	6680	11.8	***8.7***	6500	23.6	***16.6***	6250	14900	
	139.86	5.4	***3.7***	6060	6.4	***4.3***	5950	10.4	***6.8***	5790	20.7	***13.0***	5560	12860	
	153.60	4.9	***3.9***	7070	5.9	***4.6***	6870	9.4	***7.0***	6580	18.9	***13.5***	6330	14900	
	174.55	4.3	***3.0***	6270	5.2	***3.6***	6100	8.3	***5.5***	5860	16.6	***10.6***	5640	12860	
	202.91	3.7	***2.7***	6410	4.4	***3.1***	6240	7.1	***4.8***	5910	14.3	***9.2***	5680	12860	
RE 614	**174.39**	4.3	***3.6***	7200	5.2	***4.2***	7010	8.3	***6.4***	6630	16.6	***12.3***	6370	14900	
	205.88	3.6	***3.1***	7390	4.4	***3.6***	7190	7.0	***5.5***	6690	14.1	***10.5***	6430	14900	
	233.95	3.2	***2.4***	6550	3.8	***2.8***	6380	6.2	***4.3***	5960	12.4	***8.2***	5730	12860	
	252.21	3.0	***2.6***	7620	3.6	***3.1***	7410	5.7	***4.6***	6890	11.5	***8.7***	6510	14900	
	286.60	2.6	***2.0***	6760	3.1	***2.4***	6570	5.1	***3.6***	6120	10.1	***6.8***	5800	12860	
	316.50	2.4	***2.1***	7820	2.8	***2.5***	7670	4.6	***3.8***	7140	9.2	***7.0***	6590	14900	
	354.17	2.1	***2.0***	8020	2.5	***2.3***	7800	4.1	***3.4***	7260	8.2	***6.3***	6640	14900	
	402.47	1.9	***1.5***	7110	2.2	***1.8***	6920	3.6	***2.7***	6440	7.2	***4.9***	5910	12860	
	450.73	1.7	***1.3***	6680	2.0	***1.5***	6610	3.2	***2.4***	6430	6.4	***4.6***	6180	14900	7 (N)
	502.28	1.5	***1.3***	7360	1.8	***1.5***	7160	2.9	***2.2***	6660	5.8	***4.0***	6000	12860	9 (T) 6 (F)
	565.83	1.3	***1.3***	8610	1.6	***1.5***	8370	2.6	***2.3***	7790	5.1	***4.2***	7020	14900	13 (P)
	642.99	1.2	***1.0***	7640	1.4	***1.2***	7430	2.3	***1.8***	6910	4.5	***3.3***	6220	12860	
	706.15	1.1	***1.1***	8900	1.3	***1.3***	8660	2.1	***1.9***	8060	4.1	***3.5***	7250	14900	
	802.45	0.93	***0.86***	7900	1.1	***1.0***	7680	1.8	***1.5***	7150	3.6	***2.7***	6440	12860	
	886.15	0.85	***0.86***	8810	1.0	***1.0***	8570	1.6	***1.5***	7990	3.3	***2.8***	7510	14900	
	1006.99	0.74	***0.71***	8170	0.89	***0.82***	7950	1.4	***1.2***	7400	2.9	***2.2***	6660	12860	
	1105.92	0.68	***0.64***	8180	0.81	***0.76***	8100	1.3	***1.2***	7880	2.6	***2.3***	7570	14900	
	1256.73	0.60	***0.58***	8450	0.72	***0.68***	8220	1.2	***1.0***	7650	2.3	***1.8***	6890	12860	
	1416.08	0.53	***0.40***	6590	0.64	***0.47***	6410	1.0	***0.71***	6020	2.0	***1.4***	5780	12860	

		n_1= **750** RPM			n_1= **900** RPM			n_1= **1450** RPM			n_1= **2900** RPM				
	ie	**n_2** [RPM]	**P_1** [kW]	**T_2** [Nm]	**n_2** [RPM]	**P_1** [kW]	**T_2** [Nm]	**n_2** [RPM]	**P_1** [kW]	**T_2** [Nm]	**n_2** [RPM]	**P_1** [kW]	**T_2** [Nm]	**T_{2max}** [Nm]	**P_t** [kW]
RA 612	**11.14**	67	***27.1***	3600	81	***30.8***	3410	130	***43.0***	2950	260	***70***	2400	14900	11 (N) 12 (T) 9 (F) 16 (P)
	12.66	59	***27.1***	4090	71	***30.8***	3870	115	***43.0***	3350	229	***70***	2720	12800	
	16.00	46.9	***20.0***	3820	56	***22.8***	3620	91	***31.8***	3140	181	***51.7***	2550	11100	
	18.18	41.3	***20.0***	4340	49.5	***22.8***	4110	80	***31.8***	3560	160	***51.7***	2890	12800	
RA 613	**40.11**	18.7	***13.6***	6330	22.4	***16.1***	6270	36.1	***25.3***	6100	72	***48.6***	5860	14900	9 (N) 10 (T) 8 (F) 14 (P)
	45.58	16.5	***10.6***	5640	19.7	***12.6***	5580	31.8	***19.8***	5430	64	***38.1***	5220	12800	
	47.36	15.8	***11.6***	6390	19.0	***13.8***	6330	30.6	***21.6***	6160	61	***41.6***	5920	14900	
	57.60	13.0	***9.7***	6460	15.6	***11.5***	6400	25.2	***18.0***	6220	50	***34.6***	5980	14900	
	65.45	11.5	***7.6***	5760	13.8	***9.0***	5700	22.2	***14.1***	5540	44.3	***27.1***	5330	12800	
	68.00	11.0	***8.3***	6530	13.2	***9.8***	6460	21.3	***15.4***	6280	42.6	***29.6***	6040	14900	
	78.51	9.6	***6.4***	5820	11.5	***7.6***	5760	18.5	***11.9***	5600	36.9	***22.8***	5380	12800	
	85.33	8.8	***6.7***	6610	10.5	***7.9***	6540	17.0	***12.4***	6370	34.0	***23.9***	6120	14900	
	96.97	7.7	***5.2***	5890	9.3	***6.2***	5830	15.0	***9.7***	5670	29.9	***18.7***	5450	12800	
	112.73	6.7	***4.5***	5940	8.0	***5.4***	5880	12.9	***8.4***	5720	25.7	***16.2***	5500	12800	
RA 614	**160.36**	4.7	***3.9***	7110	5.6	***4.6***	6920	9.0	***7.0***	6600	18.1	***13.5***	6340	14900	6 (N) 7 (T) 5 (F) 11 (P)
	182.23	4.1	***3.1***	6310	4.9	***3.6***	6140	8.0	***5.5***	5880	15.9	***10.6***	5650	12800	
	196.45	3.8	***3.3***	7330	4.6	***3.8***	7140	7.4	***5.8***	6680	14.8	***11.1***	6420	14900	
	231.92	3.2	***2.9***	7520	3.9	***3.3***	7320	6.3	***5.0***	6810	12.5	***9.5***	6480	14900	
	263.54	2.8	***2.2***	6670	3.4	***2.6***	6490	5.5	***3.9***	6040	11.0	***7.5***	5770	12800	
	291.03	2.6	***2.4***	7780	3.1	***2.8***	7570	5.0	***4.1***	7050	10.0	***7.7***	6560	14900	
	313.85	2.4	***2.2***	7870	2.9	***2.6***	7660	4.6	***3.9***	7130	9.2	***7.2***	6590	14900	
	356.64	2.1	***1.7***	6990	2.5	***2.0***	6800	4.1	***3.0***	6320	8.1	***5.6***	5870	12800	
	393.85	1.9	***1.8***	7920	2.3	***2.1***	7840	3.7	***3.2***	7380	7.4	***5.8***	6680	14900	
	447.55	1.7	***1.4***	7230	2.0	***1.7***	7030	3.2	***2.5***	6540	6.5	***4.5***	5950	12800	
	491.52	1.5	***1.4***	7810	1.8	***1.7***	7730	3.0	***2.6***	7520	5.9	***4.8***	6870	14900	
	558.55	1.3	***1.2***	7480	1.6	***1.4***	7270	2.6	***2.1***	6770	5.2	***3.7***	6090	12800	
	629.37	1.2	***0.84***	5960	1.4	***0.99***	5900	2.3	***1.6***	5740	4.6	***3.0***	5520	12800	

N (110-210-310-510-810) - P (110-210-310-510-610)

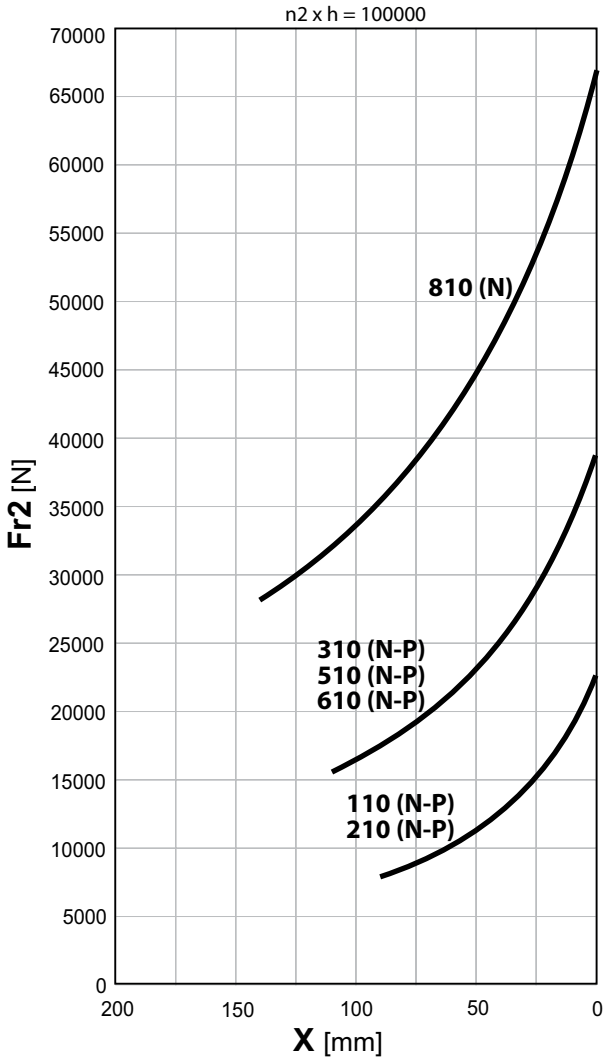

T (240-310-510-810-1020-1520-2000) - TL (310-510) - P (810-1020)

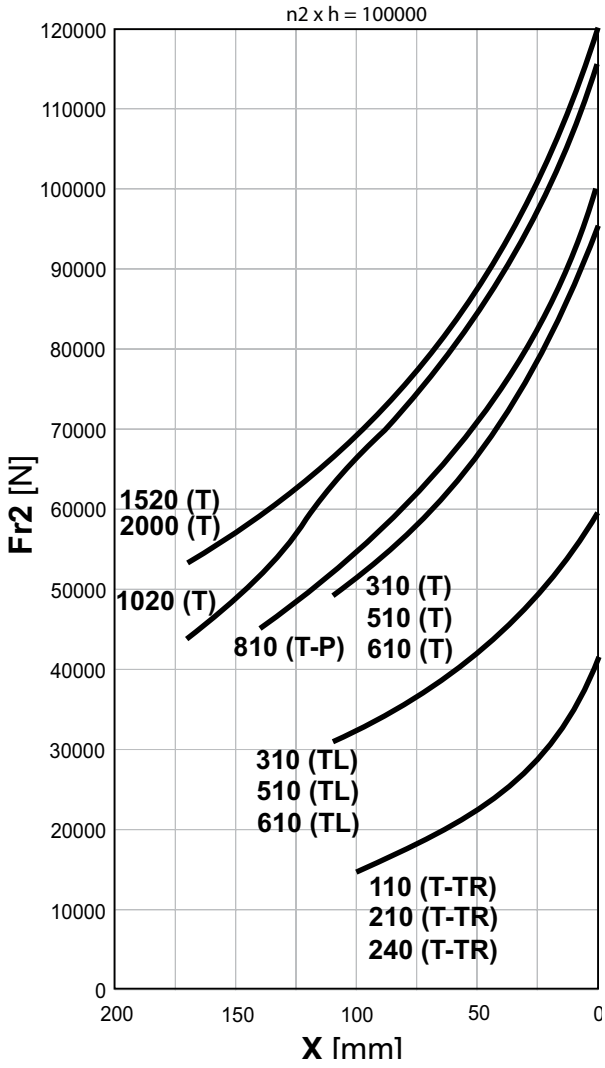

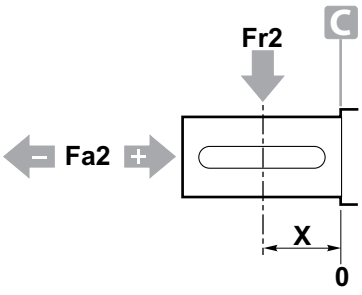

n2 x h = 100000

Fa2 [N]

RE-RA	FS		N		P		T		TL	
	Fa2 (-)	Fa2 (+)	Fa2 (-)	Fa2 (+)	Fa2 (-)	Fa2 (+)	Fa2 (-)	Fa2 (+)	Fa2 (-)	Fa2 (+)
110	6800	6800	19250	19250	19250	19250	22500	35500	—	—
210	6800	6800	19250	19250	19250	19250	22500	35500	—	—
240	7350	7350	—	—	—	—	25700	34400	—	—
310	10500	10500	39500	39500	58400	58400	57500	78500	48500	48500
510	10500	10500	39500	39500	58400	58400	57500	78500	48500	48500
610	10500	10500	39500	39500	58400	58400	57500	78500	48500	48500
810	21500	21500	58400	58400	58400	88500	58400	88500	—	—
1020	19000	19000	—	—	58400	88000	60500	104500	—	—
1520	27000	27000	—	—	—	—	73400	104500	—	—
2000	27000	27000	—	—	—	—	73400	104500	—	—

	n_2 x h						
	20000	40000	60000	80000	100000	200000	400000
K_f	1.7	1.3	1.15	1.06	1	0.8	0.63

Order code

RA	21	3	P	S	78.7	

OUTPUT VERSION

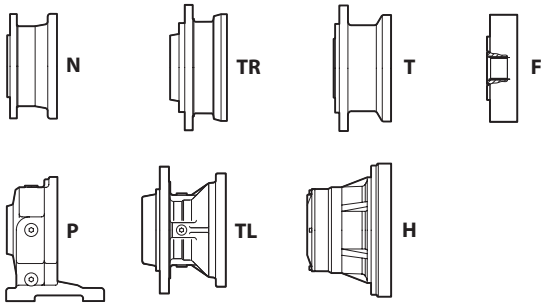

OUTPUT SHAFT

S = Male spline
F = Female spline
C = Cylindrical shaft
K = Extended cylindrical shaft
E = Hexagonal shaft
Q = Hollow female shaft
FS = Female spline
FC = Female cylindrical shaft
U = Female cylindrical shaft

NUMBER OF STAGES

1 - 2 - 3 - 4 - 5 - 6

GEARBOX FRAME SIZE

RE - RA	RE - RA	GB - GBA	GB - GBA
110	**1520**	**12010**	**61000**
210	**2000**	**16000**	**85000**
240	**2520**	**21000**	**110000**
310	**3000**	**26000**	**130000**
510	**3510**	**31000**	GB
610	**4800**	**40000**	**150000**
810	**6000**	**45000**	**205000**
1020	**8000**	**53000**	**235000**

REDUCTION RATIO

Please write the exact ratio as shown on the selection table

EXECUTION

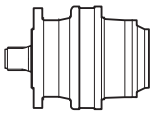

RE - GB = Linear

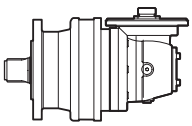

RA - GBA = Angular

COMPOSITION

/ = Standard
L = Light
R = Reinforced
S = Special

ST	BB	B3	0	BS

OUTPUT ACCESSOIRES

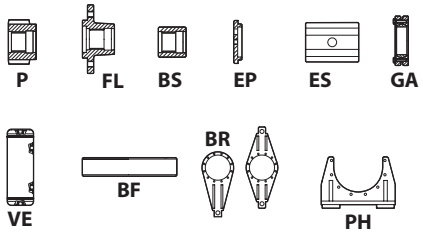

P = Pinion
FL = Flange
BS = Splined bushing
EP = End plate
ES = Hexagonal bushing
GA = Shrink disc
VE = Expansion tank
BF = Splined bar
BR = Torque arm
PH = Foot support

RIGHT ANGLE POSITIONING

MOUNTING POSITION

MOTOR ADAPTER CONFIGURATION

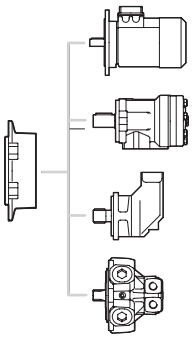

Electric motor

Orbit motor

Axial piston motor

Radial piston motor

DIRECT INPUTS

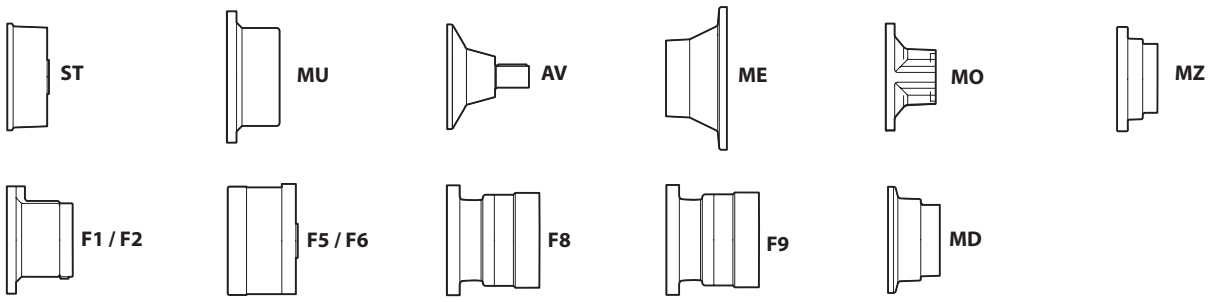

The example shows the ordering code for a right angle planetery gearbox frame 210, with 3 reduction stages a foot mounted output support and a male splined shaft, and 78.7 reduction ratio, with a "ST" input and "SAE B", 16/32 15 teeth motor adapter flange. Horizontal mounting position and standard right angle positioning, and a splined bushing output accessory.

Codice d'ordinazione

RA	21	3	P	S	78.7	

VERSIONE USCITA

G-2

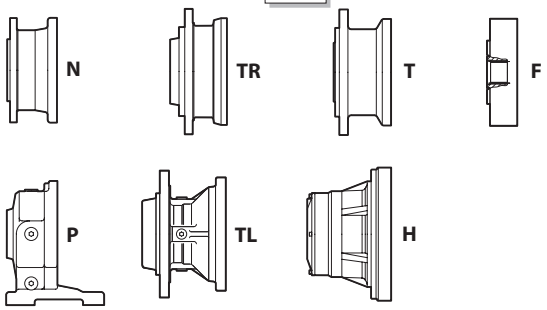

ALBERO IN USCITA

S = Scanalato maschio
F = Scanalato femmina
C = Cilindrico
K = Cilindrico lungo
E = Esagonale
Q = Giunto di attrito
FS = Femmina scanalato
FC = Femmina cilindrico
U = Femmina cilindrico

NUMERO STADI DI RIDUZIONE

1 - 2 - 3 - 4 - 5 - 6

GRANDEZZA RIDUTTORE

RE - RA	RE - RA	GB - GBA	GB - GBA
110	**1520**	**12010**	**61000**
210	**2000**	**16000**	**85000**
240	**2520**	**21000**	**110000**
310	**3000**	**26000**	**130000**
510	**3510**	**31000**	GB
610	**4800**	**40000**	**150000**
810	**6000**	**45000**	**205000**
1020	**8000**	**53000**	**235000**

RAPPORTO DI RIDUZIONE

Indicare il valore del rapporto (compreso virgola e decimale) riportato sulle pagine dei dati tecnici relative ad ogni grandezza

ESECUZIONE

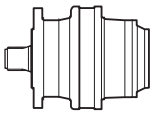

RE - GB = Lineare

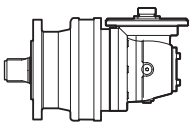

RA - GBA = Angolare

COMPOSIZIONE

/ = Standard
L = Light
R = Rinforzato
S = Speciale

ST	BB	B3	0	BS

ACCESSORI IN USCITA

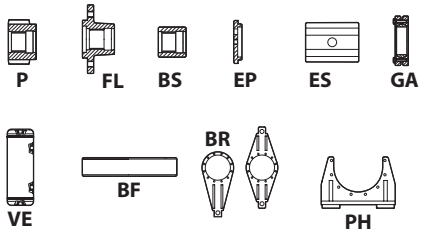

P = Pignone
FL = Flangia
BS = Boccola scanalata
EP = Fondello
ES = Manicotto esagonale
GA = Giunto di attrito
VE = Vaso di espansione
BF = Barra scanalata
BR = Braccio di reazione
PH = Piede

ORIENTAMENTO RIDUTTORE ANGOLARE

POSIZIONE DI MONTAGGIO

PREDISPOSIZIONE MOTORE

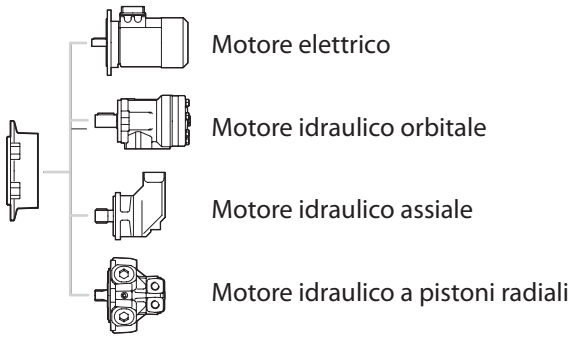

Motore elettrico
Motore idraulico orbitale
Motore idraulico assiale
Motore idraulico a pistoni radiali

ENTRATE DIRETTE

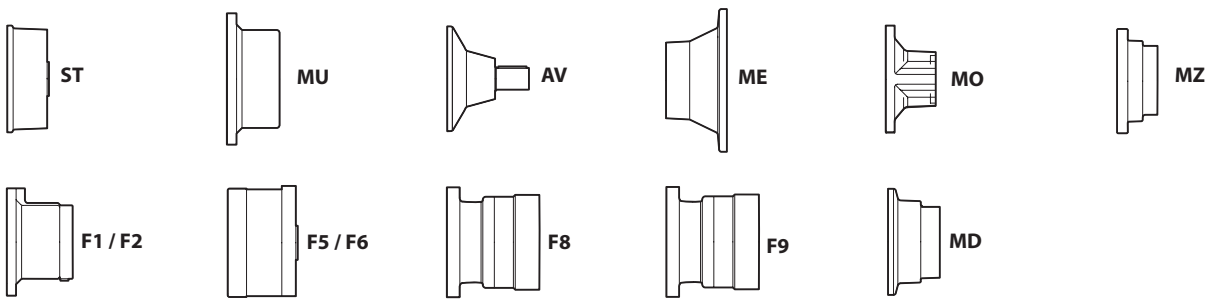

Nell'esempio è illustrato il codice di ordinazione di un riduttore planetario angolare, grandezza 210, tre stadi di riduzione, versione in uscita con i piedi e albero scanalato, rapporto di riduzione 78.7, entrata standard, predisposizione per motore "SAE B" albero 16/32 z=15, posizione di montaggio del riduttore in uscita orizzontale, orientamento del riduttore angolare standard, boccola scanalata in uscita

LEGAL NOTES

All information in this catalogue has been checked; in case of possible mistakes, we decline all responsibility.

Dinamic Oil reserves the right to amend the technical data of this catalogue without prior notice.

For all further information please contact Dinamic Oil S.p.A. Commercial Department.

NOTE LEGALI

Tutti i contenuti riportati nel presente catalogo sono stati controllati; in caso di eventuali errori viene comunque declinata ogni responsabilità.

Dinamic Oil si riserva la facoltà di modificare senza preavviso i dati tecnici riportati.

Per ulteriori informazioni contattare il servizio tecnico commerciale Dinamic Oil S.p.A.

dinamic oil

DINAMIC OIL S.p.A.
Via Togliatti,15 - 41030 - Bomporto - Modena - Italy
Phone: +39 059 812611 / Fax: +39 059 812600
E-mail: sales@dinamicoil.it - www.dinamicoil.com

DINAMIC OIL FRANCE
ZI Montbertrand BP 3612 - 38236 Charvieu Cedex - France
Phone: +33 (0) 472-46-23-18 / Fax: +33 (0) 472-46-23-27

DINAMIC OIL DEUTSCHLAND GmbH
Frankfurter Straße 151 b - D - 63303 Dreieich-Sprendlingen
Phone: +491736927478

DINAMIC OIL NORWAY A/S
Lindebergveien, 3 - 2016 Frogner
Office: +47 63825040 - Fax: +47 63825041 - Norway

DINAMIC OIL NORTH AMERICA INC.
511 Eagleton Downs Drive - Charlotte - NC - 28134 - USA
Phone: +1-704-587-4600 / Fax: +1-980-939-6297

DINAMIC OIL INDIA PVT LIMITED
Plot N°1295 a MIE Industrial Area Part B Bahadurgarh - Haryana 124507 - India
Phone: 0091 1276 267294 / 0091 1276 267295 - Fax: 0091 1276 267295 / 0091 1125 287537

DINAMIC OIL (Shanghai) Machinery Co.Ltd.
Building 2 No.128 Lane 168 Dieqiao Rd. Kangqiao Industry Park - Pudong - Shanghai – China
Zip Code: 201319 Phone 0086 21 68187100 Fax 0086 21 68187107

DINAMIC OIL ASIA PACIFIC Pte LTD
47L Tuas South Avenue 1 - Singapore 637249
Phone: +65-67910802 - Fax: +65-67912661