Jenaer Antriebstechnik GmbH

EtherCAT®

PROFIBUS®

CANopen®

Installation and Operating Instructions

ECOVARIO® 114 / 214 / 414

Published editions:

Edition	Comment
July 2005	First English edition
May 2008	Revised version, new hardware ECOVARIO® 114, Ethernet interface
July 2008	Revised version, EtherCAT® interface
March 2009	Revised version, ECO Studio, ECOVARIO® 114 UL
April 2009	Revised version: leakage current, threshold values ballast circuit, mounting dimensions in the cabinet
June 2010	Revised version: description of the safety function „STO“ according to EN 61800-5-2
Nov. 2011	Revised version: safety function „STO“ function in ECOVARIO® 114
Feb. 2012	Revised version: safety function „STO“ function in ECOVARIO® 114
June 2012	Revised version: EtherCAT® interface and marking
January 2013	Revised version: remarks of UL file review
May 2013	Revised version: Error messages D14, D15
Nov. 2013	Revision of the safety instructions
Nov. 2014	Revised version: CAN interface supply

Jenaer Antriebstechnik GmbH
Buchaer Straße 1
07745 Jena

The content of this document has been worked out and checked carefully. Nevertheless differences from the real state of the hard and software can never be fully excluded. Necessary corrections will be carried out in the next edition.

Inhalt

1 About this manual 7

2 Safety instructions / Consignes de sécurité 7
2.1 Signal words and symbols / ***Mots d'avertissement et symboles*** *7*
2.2 General notes / ***Indications générales*** *8*
2.3 Dangerous voltages / ***Danger dus à des tensions dangereuses*** *8*
2.4 Danger by hot surfaces / ***Dangers dus à des surfaces chaudes*** *9*
2.5 Danger by unintentional mechanical movements / ***Dangers dus à des mouvements involontaires*** *9*
2.6 Prescribed use / ***Utilisation conforme*** *9*

3 Legal notes 11
3.1 Terms of delivery 11
3.2 Liability 11
3.3 Standards and directives 11
3.3.1 UL/CSA conformity according to UL 508C / ***Conformité UL/CSA d'après UL 508C*** *11*
3.3.2 CE conformity 12

4 Technical Data 14
4.1 Rated data of the power stage 14
4.2 General technical data 15
4.3 Order key 17
4.4 Suitable types of motors 18
4.4.1 ECOSPEED motors 18
4.4.2 ECOSTEP® motors 18
4.4.3 Direct linear motors 19
4.4.4 DC servo motors 19

5 Installation 20
5.1 Mounting 20
5.1.1 Important notes / ***Informations importantes*** *20*
5.1.2 Dimensions 20
5.1.3 Assembly 22
5.2 Electrical installation 23
5.2.1 Important notes 23
5.2.2 EMC compliant installation 24
5.2.3 Connection diagram 24
5.2.4 Types of lines 26
5.2.5 Operation with residual current devices 28

6 Interfaces 29
6.1 Overview 29
6.2 Control signals 31
6.2.1 X1: Digital inputs and outputs, 24 V 31
6.2.2 X2: Digital Inputs 32
6.2.3 X3: Analog inputs and outputs (ECOVARIO® 214/414 only) 34
6.3 Power interfaces 35
6.3.1 X4: DC link voltage and ballast resistor 35
6.3.2 X5: Motor 37
6.3.3 X6: Power connection 38
6.3.3.1 ECOVARIO® 214/414 38

6.3.3.2 ECOVARIO® 114 ... 39
6.3.4 X7: Brake ... 40
6.4 Safety functions ... 41
6.4.1 Restart lock / Safe torque off (STO) ... 41
6.4.1.1 ECOVARIO 214/414 ... 41
6.4.1.2 ECOVARIO 114 ... 45
6.5 Encoders ... 48
6.5.1 X11: Encoder A ... 48
6.5.2 X12: Encoder B ... 50
6.6 Serial interfaces ... 52
6.6.1 X13: RS485/RS232 interface (at ECOVARIO® 214/414 with 2 capture inputs) ... 52
6.6.2 X14: Parameterizing USB interface ... 55
6.7 X21: CAN interface ... 56
6.8 Optional interfaces ... 57
6.8.1 X22: Designs with encoder emulation ... 57
6.8.2 X22: Designs with PROFIBUS DP-V0 interface ... 58
6.8.3 X22: Designs with Ethernet interface ... 60
6.8.4 X22: Designs with EtherCAT® interface ... 63

7 Commissioning ... 65
7.1 Notes before commissioning ... 65
7.2 Control and display elements ... 65
7.3 Work schedule commissioning ... 66
7.3.1 State display ... 67
7.3.2 Error messages ... 68
7.3.3 Key operation ... 71

8 Parameter setting ... 72
8.1 User interface ECO Studio ... 72

9 Accessories ... 73
9.1 Supplementary parts ... 74
9.1.1 Heat sink ... 74
9.1.2 Shield set ... 74
9.2 Parameterizing accessories for ECOVARIO® 214/414 ... 76
9.2.1 VARIOSWITCH ... 76
9.2.2 Starter kit ECOVARIO®, USB version ... 77
9.2.3 Starter kit ECOVARIO®, CAN version ... 77
9.3 Ballast resistors ... 78
9.3.1 Ballast resistors 100 W (250 W cooled) ... 78
9.3.2 Ballast resistors 200 W (500 W cooled) ... 80
9.4 Mating connector set ECOVARIO® ... 81
9.5 Cables ... 82

10 Appendix ... 83
10.1 Glossary ... 83
10.2 Index of formulae ... 85
10.3 Index of standards and directives ... 85

1 About this manual

This original instructions describe the servo amplifier range ECOVARIO® 114 / 214 / 414 (single-axis). It concerns to all persons who project, install and commission ECOVARIO® drives.
Note: The 2-axis servo amplifier ECOVARIO® 114 D is described in a separate manual.

Further information:

- Software commissioning: „ECO Studio Operation Manual ECOVARIO®, ECOSTEP®, ECOMPACT®“
- Programming: manual „Object Dictionary ECOVARIO® and ECOSTEP®“, software tool ECO Studio
- Application Notes ECOVARIO® and ECOSTEP®
- Motor data: Product catalogue „ECOSTEP®/ECOVARIO®/ECOLIN® Drives“.

This manual makes the following demands on qualified personnel:
Transport: Personnel trained in handling electrostatic sensitive devices
Installation: Electrotechnically qualified personnel who know the security directives of electrical engineering and automation
Setup/Commissioning: Qualified personnel with a broad knowlege of the fields of electrical engineering, automation and drives.
Knowledge of machine safety legislation is compulsory.

2 Safety instructions / *Consignes de sécurité*

2.1 Signal words and symbols / *Mots d'avertissement et symboles*

Table 2.1: Signal words and possible symbols / Mots d'avertissement et symboles

	Description	*Description*
DANGER 	**Warning about a dangerous situation. Disregarding this warning will lead to death or serious, irreversible injuries.** Left symbol: General danger Right symbol: Dangerous electrical voltages	***Indique une situation dangereuse. Le non-respect de l'indication de danger mènera à la mort ou à des blessures graves ou irréversibles.*** *Pictogramme de gauche : indication générale de danger* *Pictogramme de droite : Danger du au courant électrique*
WARNING / *AVERTISSEMENT* 	**Warning about a dangerous situation. Disregarding this warning may lead to death or serious, irreversible injuries** Left symbol: General danger Right symbol: Dangerous electrical voltages	***Indique une situation dangereuse. Le non-respect de l'indication de danger peut mener à la mort ou à des blessures graves ou irréversibles.*** *Pictogramme de gauche : indication générale de danger* *Pictogramme de droite : Danger du au courant électrique*
CAUTION / *ATTENTION* 	**Warning about a dangerous situation. Disregarding this warning may lead to minor injuries** Left symbol: General Right symbol: Hot surfaces	***Indique une situation dangereuse. Le non-respect de l'indication de danger peut mener à des blessures légères.*** *Pictogramme de gauche : indication générale* *Pictogramme de droite : Attention aux surfaces chaudes*
NOTICE / *PRUDENCE*	**Disregarding this note may lead to damages of things.**	***Indique une situation qui, si elle n'est pas évitée, peut mener à la détérioration de matériel.***
INFO / *INDICATION* ☞	**Not a safety instruction. However: Important information on the use of the servo amplifier.**	***N'indique pas de situation de danger, mais une information importante par rapport à l'utilisation de l'amplificateur de servomoteur.***

2.2 General notes / *Indications générales*

CAUTION / ***ATTENTION***	**Improper handling of the servo amplifier may lead lead to injuries and material damage.** Read this documentation carefully before you install and commission the device. The technical data and the information on connection requirements (nameplate and documentation) have to be adhered to. Only properly qualified personnel are permitted to perform activities such as transport, installation, setup and maintenance of the servo amplifier ECOVARIO®.	***L'utilisation non conforme des amplificateurs de servomoteurs peut entrainer des blessures et des dégâts matériels.*** *Veuillez lire la documentation avant d'installer et de mettre en route l'appareil. Les données techniques ainsi que les informations concernant le raccordement (Plaque constructeur et documentation) doivent absolument être respectées.* *Le transport, l'installation, la mise en service de l'amplificateur de servomoteurs ECOVARIO® ne doivent être réalisés que par du personnel autorisé et qualifié.*
CAUTION / ***ATTENTION***	**The manufacturer of the machine must generate a hazard analysis for the machine and take appropriate measures to ensure that unforeseen movements cannot cause injury or damage to any person or property.** In case of modifications or retrofits with components of manufacturers other than Jenaer Antriebstechnik, please contact us to clarify that those components are suitable to be assembled with our devices.	***Le fabricant d'une machine ou d'une installation doit réaliser une analyse des risques et en tirer les conséquences qui assurent une utilisation en toute sécurité de l'ensemble de l'installation.*** *Lors de modification ou intégration de matériels d'autres fabricants, merci de nous contacter pour que nous puissions vérifier la compatibilité de ces éléments avec nos composants d'entrainement.*

2.3 Dangerous voltages / *Danger dus à des tensions dangereuses*

DANGER	**Never open the units during operation. There is danger of life or a risk of serious health and material damage.** Covers and cabinet doors have to be kept closed during operation. With the opening of the device all warranty and liability claims against Jenaer Antriebstechnik GmbH are void.	***Ne pas ouvrir l'appareil pendant l'utilisation. Il y a danger de mort ou danger de graves dommages à la santé et au matériel.*** *Les capots et portes d'armoires électriques doivent restés fermés pendant l'utilisation. L'ouverture de l'appareil entraine la perte de toute garantie et responsabilité de Jenaer Antriebstechnik GmbH.*
WARNING / ***AVERTISSEMENT***	**The protective earth conductor has to be properly applied before applying a voltage.** If the protective earth conductor is not connected, in case of a failure e.g. the housing of the servo amplifier can be at hazardous voltage level.	***Un raccordement à la terre réglementaire doit obligatoirement être raccordé avant la mise sous tension de l'appareil.*** *Si cette mise à la terre n'est pas raccordée, le boitier de l'amplificateur de servomoteur peut, en cas de problèmes, mener de dangereuses tensions.*
WARNING / ***AVERTISSEMENT***	**Never undo electrical connections while they are live! There is a risk of arcing. Arcs can cause injury and damage contacts.** During operation logic and power connectors are live.	***Ne pas effectuer de débranchements sous tension. Il y a danger d'arc électrique qui peut blesser des personnes et endommager des contacts.*** *Pendant l'utilisation les conducteurs de pilotage et de puissance conduisent des tensions dangereuses.*
WARNING / ***AVERTISSEMENT***	**Directly after disconnecting the servo amplifier from the power supply never touch parts of the device which potentially could be live (e.g. contacts).** Wait at least six minutes. Capacitors can still have dangerous voltages present. To be sure measure the DC link circuit and wait till it has fallen below 40 V.	***Ne touchez pas de pièces de l'amplificateur de servomoteurs directement après l'avoir débranché de l'alimentation électrique qui peuvent être potentiellement conducteur de tension (par exemple des contacts).*** *Attendez au moins 6 minutes. Les condensateurs peuvent rester chargés aussi longtemps de tension dangereuse. Mesurez par sécurité les tensions entre circuits jusqu'à qu'elles soient inférieurs à 40V.*

2.4 Danger by hot surfaces / *Dangers dus à des surfaces chaudes*

CAUTION / *ATTENTION* 	**Hot surfaces may cause burns to the skin.** As the housing of the ECOVARIO serves also as heat sink during operation the surface temperature may rise to more than 70°C.	***Des surfaces chaudes peuvent entrainer des brulures.*** *Le boiter de l'ECOVARIO sert également de radiateur, ceci entraine qu'il peut atteindre des températures de plus de 70°C pendant l'utilisation.*

2.5 Danger by unintentional mechanical movements / *Dangers dus à des mouvements involontaires*

DANGER 	**Unintentional movements of motors, tools or axes may lead to death or serious injuries.** ECOVARIO® drives can produce strong mecanical powers and high accelerations. Avoid staying in the danger zone of the machine. Never switch off safety equipment! Emergency-off equipment must be workable in all operation modes, especially during setup and maintenance. Malfunctions should be repaired by qualified personnel immediately.	***Des mouvements involontaires de moteurs, d'axes ou d'outillages entrainent un danger de mort ou de blessures.*** *Les entrainements ECOVARIO® peuvent engendrer de très fortes accélérations mécaniques ainsi que des forces très élevées. Il faut éviter de se trouver dans la zone de danger de la machine. Des équipements de sécurité ne doivent jamais être mis hors service. Des équipements d'arrêt d'urgence doivent rester opérationnels dans tous les modes de fonctionnement, aussi pendant la mise en service ainsi qu'en mode maintenance. Des dérangements doivent être résorbés sans délai par du personnel qualifié.*

2.6 Prescribed use / *Utilisation conforme*

The servo amplifiers ECOVARIO® are components which are built into electrical equipment or machines and can only be used as integral components of such equipment. The leakage current of ECOVARIO® is higher than 3.5 mA. All notes about technical data and ambient conditions have to be observed.
Using the unit in hazardous locations and in ambients containing oil, gas, vapours, dusts, radiations etc. is prohibited if it is not explicitly allowed.
The manufacturer of the machine must generate a hazard analysis for the machine and take appropriate measures to ensure that unforeseen movements cannot cause injury or damage to any person or property.

L'amplificateur de servomoteurs ECOVARIO® est un composant de systèmes d'entrainement, il doit être installé en monte fixe dans une armoire électrique prévue à cet effet. Le courant de terre de l'ECOVARIO® est supérieur à 3,5 mA.
Toutes les indications de donnée techniques et conditions d'implantation doivent absolument être respectées.
L'utilisation de l'appareil est interdite dans des environnements aux risques explosifs, environnements huileux, acide, gazeux, vaporeux, poussiéreux, radiants, etc… s'il n'est pas expressément autorisé pour ces milieux.
Le fabricant de la machine ou de l'installation doit établir une analyse des risques et en tirer les conséquences qui garantissent une utilisation en toute sécurité.

WARNING / *AVERTISSEMENT*	**ECOVARIO may <u>not</u> be connected to the 3 phase 400 V mains power supply!** Observe the maximum power supply voltages of the various ECOVARIO types according to data sheet and name plate.	***ECOVARIO ne doit pas être connecté directement à l'alimentation 400 V 3 phases!*** *Notez les tensions d'alimentation maximales des types ECOVARIO individuelles précisés sur la feuille de données et la plaque signalétique.*

If one or more servo amplifiers ECOVARIO® are built into machines or plants the intended operation of the servo amplifier is forbidden until it has been established that the machine or plant fulfills the requirements of the EC Machinery Directive 2006/42/EC and the EMC Directive 2004/108/EC. Further EN 60204 and EN ISO 12100 parts 1 and 2 have to be observed.

La mise en service d'une installation ou une machine où sont intégrés un ou plusieurs ECOVARIO® est interdite jusqu'à ce qu'il ait été établi que toutes les dispositions des directives européennes et des règles de sécurité de protection contre les accidents spécifiques au pays d'implantation soient remplies. En particuliers, il s'agit en premier ordre de la Directive Machines 2006/42/CE et de la Directive CEM 2004/108/CE. Puis DIN EN 60204 et DIN EN ISO 12100, parties 1 et 2.

Safety function „Safe Torque Off", STO (cf. chapter 6.4.1) / *Fonction de sécurité „Safe Torque Off", STO, chapitre 6.4.1*

The safety function STO must be integrated into a safety circuit that meets the demands of the safety standards of EN 60204, EN ISO 12100-1 and -2 and EN ISO 13849-1. It must only be activated when the motor is not longer rotating. Drives with a suspended load must have an additional safe mechanical blocking.

La fonction de sécurité STO doit être intégrée dans un circuit de sécurité, les exigences des directives DIN EN 60204, DIN EN ISO 12100-1 et -2 et EN ISO 13849-1 sont suffisantes.
Elle ne doit être activée que si le moteur est arrêté et isolé de toute force s'exerçant sur lui (par exemple des charges suspendues) qui doivent être bloquées avec un dispositif mécanique complémentaire.

2.7 Foreseeable misuse of the safety function STO / *Mauvaises utilisation prévisibles de la fonction de sécurité STO*

The safety function STO must **not** be used if the drive is to be made inactive for the following reasons:

- cleaning, maintenance and repair operations
- long inoperative periods

In such cases the entire system should be disconnected from the supply by the personnel, and secured (main switch).

- in emergency-stop situations

In emergency-stop situations the main contactor is switched off (by the emergency-stop button or the BTB-contact in the safety circuit).

La fonction de sécurité STO ***ne doit pas être utilisée***

- *pendant la mise à l'arrêt pour travaux de nettoyage, de maintenance, de réparation ainsi que pour de longues interruptions d'utilisation : Dans ces cas, l'installation doit être mise hors tension par le sectionneur principal*
- *dans une situation d'arrêt d'urgence : dans ce cas, un relais d'arrêt d'urgence doit mettre l'installation hors tension.*

3 Legal notes

3.1 Terms of delivery

Our terms of delivery are based on the „The General Terms of Delivery for Products and Services of the Electrical Industry“ (German: ALB ZVEI) of the Central Association of the Electrical and Electronics Industry (ZVEI e.V.) in their current version.

3.2 Liability

The circuits and procedures in this manual are proposals. Every user has to check the suitability for every special case. Jenaer Antriebstechnik GmbH is not responsible for suitability. Especially Jenaer Antriebstechnik is not responsible for the following damage causes:

- disregarding the instructions of this manual or other documents concerning ECOVARIO®
- unauthorized modifications of drive, motor or accessories
- operating or dimensioning faults
- Improper use of the ECOVARIO® components

3.3 Standards and directives

ECOVARIO® are components intended to be built into machines or plants for industrial purpose.

the units meet the following standards:
DIN EN 61800-5-1: Adjustable speed electrical power drive systems – Part 5-1: Safety requirements; Electrical, thermal and energy

DIN EN 61800-3: Adjustable speed electrical power drive systems – Part 3: EMC requirements and specific test methods

DIN EN 60 204: Safety of machinery - electrical equipment of machines - Part 1: General requirements.

3.3.1 UL/CSA conformity according to UL 508C / *Conformité UL/CSA d'après UL 508C*

If ECOVARIO® servo amplifiers are to be used in countries where UL (Underwriters Laboratories Inc.) or cUL conformity resp. is required the appropriate type has to be selected (cf. chapter 4.3 „Order key“).
For further information see UL file number E244038 at www.ul.com.
Si les amplificateurs de servomoteur ECOVARIO® sont installés dans des pays où l' UL ou une conformité cUL est requise, le type exact qui est requis doit être précisé lors de la commande on choisissant le type exacte (voir chapitre 4.3 clé du type). Vous trouverez des informations complémentaires sous le numéro de fichier UL - E244038 sur la page web www.ul.com.

The UL(cUL) certification (UL 840 and UL 508C in this case) is related exclusively to the mechanical and electrical design of the device. UL(cUL) certified servo amplifiers are in accordance with the respective american and canadian fire regulations.
La certification UL(cUL) (Dans ce cas UL 840 et UL 508C) se rapporte exclusivement aux caractéristiques de constructions mécaniques et électriques de l'appareil. Les directives UL(cUL) fixent entre autres les exigences techniques minimales pour appareils électriques pour prévenir les risques d'incendie qui émanent d'appareils électriques.

The installation and safety precautions in this documentation have to be observed.
Les indications d'installation et de sécurité de ce document doivent être respectées.

3.3.2 CE conformity

ECOVARIO® servo amplifiers are components that are intended to be built into electrical plant and machines for industrial use. The manufacturer of the machine is responsible that the machine or plant fulfills the requirements of the EMC directive.
The servo amplifiers have been tested by an authorized testing laboratory in a defined configuration with the system components which are described in this documentation.
Any divergence from the configuration and installation described in this manual means that you will be responsible for carrying out new measurements to ensure that the regulatory requirements are fulfilled. For servo amplifiers with integrated safety function the conformity assessment is carried out according to the EC machine directive 2006/42/EC.

Jenaer Antriebstechnik GmbH

Jenaer Antriebstechnik GmbH • Buchaer Straße 1 • 07745 Jena
Tel.: +49 (0) 3641/63376-0 • Fax: +49 (0) 3641/63376-99 Internet: www.jat-gmbh.de • E-mail: info@jat-gmbh.de

EG – Konformitätserklärung
EC – Declaration of Conformity

Hiermit erklären wir / Herewith we

Jenaer Antriebstechnik GmbH, Buchaer Str. 1, 07745 Jena, Deutschland

in alleiniger Verantwortung, dass das gelieferte Modell / declare under our own responsibility that the supplied model of

Servoverstärker mit Sicherheitsfunktion ECOVARIO® 214 xR-xx-xxx-xxx
Servo amplifier with safety function
Servoverstärker mit Sicherheitsfunktion ECOVARIO® 414 xR-xx-xxx-xxx
Servo amplifier with safety function

den Anforderungen der	complies with
EG-Maschinenrichtlinie 2006/42/EC Anhang IX und VIII entspricht.	**EC Machinery Directive 2006/42/EC Annex IX and VIII**

Hierfür wurden die folgenden harmonisierten Normen angewendet / For this, the following harmonized standards were applied:

EN 60204-1:2006, EN ISO 13849-1:2008
EN 61800-5-2:2007, EN 61800-5-1 / VDE160
EN 61800-3:2004

Konformitätsbewertung / Conformity assessment:

Benannte Stelle / notified body:	TÜV Rheinland Industrie Service GmbH, Am Grauen Stein 51105 Köln
Zertifikat Nr. / Certificate No.:	01/205/5018/10
Gültig bis / Date of expiry:	30.06.2015

Das Produkt ist nach Artikel 2, Buchstabe c der Richtlinie 2006/42/EG als Sicherheitsbauteil definiert. Es ist ausschließlich für den Einbau in eine Maschine bestimmt. Die Inbetriebnahme ist so lange untersagt, bis die Gesamtmaschine, in die das Produkt eingebaut werden soll, den Bestimmungen der Richtlinie 2006/42/EG entspricht.
Die Sicherheitshinweise der Betriebsanleitung sind zu beachten.

The products are defined as safety components according to directive 2006/42/EC. They are exclusively intended for installation in machines. Operation is prohibited until it has been determined that the machines in which these products are to be installed, conform to the directive 2006/42/EC.

The safety instructions of the manual are to be considered.

Ort, Datum der Ausstellung (Place and date of issue)	Geschäftsführer (General Manager)	Dokumentationsverantwortlicher (Responsible for documentation)
Jena, 07.07.2010	Dipl.-Ing. (FH) Stephan Preuß	Dipl.-Ing. (FH) Oliver Trapp

Jenaer Antriebstechnik GmbH

Buchaer Straße 1 · 07745 Jena · Germany
Tel. +49 (0) 3641 60 88 90
Fax. +49 (0) 3641 608901

Declaration of Conformity

We

Jenaer Antriebstechnik GmbH
Buchaer Straße 1
07745 Jena
Germany

declare that the product

Product Group:	Servo Drive
Type:	ECOVARIO®114XX-XX-XXX-XXX ECOVARIO®214X**N** XX-XXX-XXX ECOVARIO®414X**N** XX-XXX-XXX

is in conformity with the

EU Directive 89/336/EWG	(EMC Directive)
Applied harmonised standards:	EN 61800-3 (EMI Disturbance) EN 61800-3 (EMI Immunity)
EU Directive 73/23/EWG:	(Low Voltage Directive)
Applied harmonised standards:	EN 61800-5-1 EN 60204

and with the following international standards (selected types)

Power Conversion Equipment (USA):	UL 508C File No.: E244038
Industrial Control Equipment (Canada):	CSA C22.2 No. 14-M05

Issued by:	Jenaer Antriebstechnik GmbH Dipl.-Ing. Udo Penndorf
Location, Date:	Jena, 17.03.2008
Signature:	

4 Technical Data

4.1 Rated data of the power stage

Table 4.1: Rated data of the power stage, AC supply

Symb.	Rated data MAC2 – 2-phase AC servo motor MAC3 – 3-phase AC servo motor	Unit	ECOVARIO®					
			114		2 14		4 14	
			MAC2	MAC3	MAC2	MAC3	MAC2	MAC3
1-phase AC supply								
U_{Netz}	Rated supply voltage at AC input connector X6	V_{AC}	48 (20 ... 48)		105 (20 ... 120)		230 (20 ... 265)	
f_N	Line frequency	Hz	50 – 60		50 – 60		50 – 60	
S_N	Rated installed load[3)]	kVA	0.48		1.0		2.2	
P_{VN}	Rated losses[2)]	W	40		62		70	
U_O	Rated output voltage[1)]	V_{AC}	42		85		190	
I_{ON}	Rated output current[6)]	A_{RMS}	5.3	7.1	2.7	3.5	2.7	3.5
P_{ON}	Rated output power[1)]	W	223	298	460	515	1 025	1 150
Losses if diverging from nominal load: $P_V = P_{V0} + P_{VI} + P_{VD}$								
P_{V0}	Basic losses	W	10		20		20	
P_{VI}/I_O	Current-dependent losses per A	W/A	2.7	2.0	7.9	5.9	13.7	10.3
P_{VD}/P_O	Output power-dependent losses per 100 W	W/100 W	5.0		2.3		1.0	
3-phase AC supply								
U_{Netz}	Rated supply voltage at AC input connector X6	V_{AC}	no 3-phase supply		105 V		230 V	
f_N	Line frequency	Hz			50 – 60		50 – 60	
S_N	Rated installed load[3)]	kVA			1.4		3.5	
P_{VN}	Rated losses[2)]	W			89		106	
U_O	Rated output voltage[1)]	V_{AC}			95		205	
I_{ON}	Rated output current[6)]	A_{RMS}			5.3	7.1	5.3	7.1
P_{ON}	Rated output power[1)]	W			1 010	1 150	2 173	2 480
Losses if diverging from nominal load: $P_V = P_{V0} + P_{VI} + P_{VD}$								
P_{V0}	Basic losses	W	no 3-phase supply		20		20	
P_{VI}/I_O	Current-dependent losses per A	W/A			7.9	5.9	13.7	10.3
P_{VD}/P_O	Output power-dependent losses per 100 W	W/100 W			1.37		0.46	
1 or 3 phase AC supply								
I_{OP}	Peak output current[2)]	A_{RMS}	14	14	14	14	14	14
U_{BUSN}	Rated DC link voltage	V_{DC}	60		150		325	
U_{BUSP}	Max. DC link voltage	V_{DC}	70		180		380	
U_P	Overvoltage trip	V_{DC}	90		200		400	
C_L	DC link capacity	µF	1760		2000		660	
E_{N-P}	Regenerated capacity	Ws	2.8		10		13	
R_B	Ballast resistor	Ω	10		10		22	
P_{BP}	Impulse power	kW	0.81		3.2		6.6	

Table 4.2: Rated data of the power stage, DC supply

Symb.	Rated data MAC2 – 2-phase AC servo motor MAC3 – 3-phase AC servo motor	Unit	ECOVARIO					
			114		2 14		4 14	
			MAC2	MAC3	MAC2	MAC3	MAC2	MAC3
DC supply[4)]								
U_{NDC}	Rated supply voltage at DC input connector X4	V_{DC}	70 (24 ... 70)		150 (24 ... 170)		325 (48 ... 360)	
P_N	Rated installed load	W	700		1500		3250	
P_{VN}	Rated losses[5)]	W	50		75		92	
2: $P_V = P_{V0} + P_{VI}$								
P_{V0}	Basic losses	W	10		20		20	
$P_{VI/IO}$	Current-dependent losses per A	W/A	2.7	2.0	7.9	5.9	13.7	10.3
U_O	Rated output voltage[1)]	V	50		100		225	
I_{ON}	Rated output current[6)]	A_{RMS}	5.3	7.1	5.3	7.1	5.3	7.1
P_{ON}	Rated output power[1)]	W	530	615	1060	1212	2385	2720
I_{OP}	Peak output current[2)]	A_{RMS}	14		14		14	
U_{BUSN}	Rated DC link voltage	V_{DC}	60		150		325	
U_{BUSP}	max. DC link voltage	V_{DC}	70		180		380	
U_P	Overvoltage trip	V_{DC}	90		200		400	
C_L	DC link capacity	µF	1760		1000		330	
E_{N-P}	Regenerable capacity	Ws	2.8		5		6.5	

4.2 General technical data

Table 4.3: General technical data, control signals

No.		Control signal	Unit	
114	214/414			
1		24 V supply (current draw without outputs)	V	24 ±10 %
			A	0.8
6		Digital control signal inputs	V	LOW 0 – 7, HIGH 12 – 36
			mA	10 (at 24 V)
3		Digital control signal outputs	V	24
			A	0.5
1	2	Analog inputs		-10 V – +10 V, 10 Bit resolution[8)]
-	2	Analog outputs		10 Bit resolution

Table 4.4: General technical data, external fuses

	ECOVARIO®		
	114	2 14	4 14
AC supply	10 A (slow)	10 A (slow)	10 A (slow)
DC supply	10 A (slow) [4)]	10 A (slow) [4)]	10 A (slow) [4)]
Note: When the device is used in an UL environment the overcurrent protection equipment has to comply to UL Class RK5 or UL489!			
24 V supply	max. 10 A (fast)	max. 10 A (fast)	
External ballast resistance (not accessory resistors DPRxx-xxx)[7)]	10 A (fast) [4)]	10 A (fast) [4)]	10 A (fast) [4)]

Table 4.5: General technical data, ambient conditions

Ambient conditions			
ECOVARIO® is designed for ambient conditions of class 3K3 following EN 50178.			
Symb.	Condition	Unit	
T_A	Ambient temperature during operation with nominal load	°C	5 – 40
	Degree of humidity (not condensing)	% R. H.	5 – 85
p	Air pressure	mbar	860 – 1 060
	Cooling		the closed cubicle has to be sufficiently ventilated.
h	Installation altitude	m	up to 1 000 without restriction of power
	Installation position		The technical data refer to a vertical position.
	Protection class		IP20

Table 4.6: General technical data, dimensions and weight

Dimensions and weight	Unit	ECOVARIO® 114	ECOVARIO® 214/414
Dimensions w x h x d	mm	42 x 279 x 167	62 x 279 x 167
Weight of unit	kg	1.35	2.1
Weight with shield set	kg	1.45	2.2
Weight with shield set and heat sink DPX10	kg	-	3.5

Footnotes to tables 4.1 to 4.6

1)	The data refer only to the internal data of the servo amplifier. Modifications of the input voltage due to line supply fluctuations are not taken into consideration. That means that with 15 % less input voltage the output data (U_O, P_O) on X5 have to be reduced by 15 %.
2)	At a heat sink temperature of more than 70 °C a linear reduction of the peak output current of 0.25 A/K is carried out. Working with high continuous current an additional heat sink is necessary. If the heat sink temperature rises over 90 °C or if the ambient temperature passes the upper limit the servo amplifier is switched off.
3)	The apparent powers of the AC input (X6) refer to the maximum DC output power. Depending on the application the continuous loading capability can be reduced. In any case it must be made sure that the inrush current to charge the DC link (charging resistance 5 – 10 Ω) does not trigger a fuse of the supply. Therefore always a 10 A-fuse with time-lag has to be used.
4)	The DC link connection (X4) has no inrush-current limiting. Therefore appropriate circuits have to be integrated in the central power supply. The power supply also has to be resistant against regenerated energy. It must regulate the DC link voltage during dynamic operation under the limit U_P. If the regenerating energy higher than the energy consumed by all units connected to the DC bus, the power supply must have a load circuit. The units with AC supply need a regen resistor (R_B) X4. For selecting components, the pulse power has to be regarded (P_{BP}). The continuous power depends on the application.
5)	The losses P_{VN} refer to nominal operation with I_{ONenn} and the maximum output power P_{DC}
6)	Rated continuous current for dimensioning. The effective value of the motor current must not exceed this value because otherwise some components will not reach their rated lifetime. This maximum value is part of the firmware and cannot be changed (Ixt limit). If the motor has a lower rated current, this value should be reduced. The maximum time constant of the necessary filters depends on the unit, its range is 1 – 10 s. Also this value cannot be increased but lowered to protect the motor. These two parameters define indirectly the allowed time of the peak current.
7)	The accessory ECOVARIO® resistors DPRxx-xxx are intrinsically safe and therefore do not have to be fused.
8)	At ECOVARIO® 114: Input voltage range: 0 ... + 10 V

4.3 Order key

Table 4.7: Order key ECOVARIO®

ECOVARIO®	x	xx	x	x	-	x	x	-	xxx	xxx
										No. of parameter set (three digits)
										No. of firmware (three digits)
								Approvals		
								A: CE, standard design		
								B - I: CE, special design		
								J: CE, UL, standard design		
								K - Z: CE, UL, special design		
							Type of field bus			
							A: CAN + RS485 + encoder emulation			
							F: CAN + RS485 + PROFIBUS DP-V0			
							K: CAN + Ethernet + RS485			
							B: CAN + RS232 + encoder emulation			
							G: CAN + RS232 + PROFIBUS DP-V0			
							L: CAN + Ethernet + RSS232			
							P: CAN + EtherCAT® + RS485			
							Q: CAN + EtherCAT® + RS232			
					Options					
					R: Safety function „Safe Torque Off“ (STO)					
					N: no option					
				Supply						
				A: 1 or 3-phase AC or DC (ECOVARIO 214, 414 only)						
				B: DC (ECOVARIO 214, 414 only)						
				R: 1-phase AC or DC + internal ballast resistor (ECOVARIO 114 only)						
			Current rating (rms for 5 s)							
			14: max. 14 A							
		Voltage rating (DC-Bus)								
		1: max. 100 V								
		2: max. 200 V								
		4: max. 400 V								
	Name of the unit									

Example ECOVARIO® 414 AR-AA-000-000:
ECOVARIO® servo amplifier with:

- max. 400 V_{DC} DC link voltage
- max. 14 A output current
- AC supply
- Safety function „STO“
- CAN interface + RS485 interface + encoder emulation
- CE approval, standard design

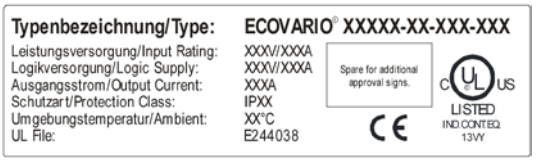

Fig. 4.1: Name plate ECOVARIO®, dimensions 70 x 20 mm

4.4 Suitable types of motors

With ECOVARO® servo amplifiers various types of motors can be operated. Rotative and linear 2-phase motors of the motor ranges ECOSTEP®, ECOLIN® and ECOSPEED as well as 3-phase and DC motors can be driven. The motors must be equipped with encoders for position and speed control. Incremental encoders, SINCOS encoders and absolute encoders can be evaluated.
It is **not** possible to drive motors with resolvers as measuring system.

The techical data in this manual refer exclusively to the encoder commutated synchronous motors mentioned in chap. 4.4.1 to 4.4.3.
If you want to drive DC motors with ECOVARIO® please contact our technical support (see http://www.jat-gmbh.de/engl/service/service.html).

4.4.1 ECOSPEED motors

Fig. 4.2: Motor ranges 80B and 110B

The motor ranges 80B and 110B contain rotative 2-phase, encoder-commutated low-pole synchronous motors with holding torques between 0.5 and 11 Nm.
For technical data and accessories for the motors see our product catalogue „ECOVARIO®-/ECOMPACT®-/ECOSTEP® Drives“ or our web site www.jat-gmbh.de

3-phase permanent magnet synchronous motors, e.g. the ECOSPEED series 60C, 80C and 110C can also be driven by ECOVARIO® servo amplifiers.

4.4.2 ECOSTEP® motors

Fig. 4.3: Motor ranges 34S and 42S

The motor ranges 23S, 34S, und 42S contain rotative 2-phase, encoder commutated, high-pole synchronous motors with holding torques between 0.2 and 15 Nm.
For series 17H and 23S the ECOVARIO® 114 is the appropriate servo amplifier.
The operation of series 34S and 42 motors with ECOVARIO® 214 with transformator is restricted by their dielectrical strength.
For technical data and accessories of the motors see the product catalogue „ECOVARIO®-/ECOMPACT®-/ECOSTEP® Drives“ or our web site www.jat-gmbh.de.

4.4.3 Direct linear motors

Fig. 4.4: Direct linear motor range SLM-080

Series SLM-025, SLM-040 and SLM-080 contains iron core, 2-phase, encoder commutated synchronous linear motors from 220 N to 1450 N peak force.
Series SLME provides ironless direct linear motors from 150 N to 400 N peak force.
For technical data and accessories of the motors see our product catalogue "ECOVARIO®-/ECOMPACT®-/ECOSTEP® Drives" or our web site www.jat-gmbh.de.

4.4.4 DC servo motors

DC motors are not part of the delivery range of the Jenaer Antriebstechnik GmbH but can be operated with ECOVARIO® amplifiers. In this case we recommend strongly to contact our technical service.
The ECOVARIO® supports DC motors with brushes as well as brushless DC servo motors in conjunction with RS422 compatible standard encoders.

5 Installation

5.1 Mounting

5.1.1 Important notes / *Informations importantes*

- Make sure that transport and storage did no damage to the units. /
  Veillez à ce que le matériel n'a pas subi de dommages lors du transport ou du stockage.
- The ambient air must not be polluted by dust, greases, aggressive gas etc. Eventually appropriate countermeasures have to be taken (installation of filters, frequent cleaning). /
  L'air de ventilation ne doit pas être souillé (Poussière, graisses, gaz agressifs, etc.). Le cas échéant prendre les mesures nécessaires intégration de filtres, nettoyage régulier)
- The ECOVARIO with STO function has to be mounted in a cabinet which conforms to protection class IP54 (or in a comparable environment) /
  L'ECOVARIO avec fonction STO doit être monté dans une armoire électrique ou un environnement équivalent qui présente un degré de protection minimum IP54.
- Depending on the power losses an appropriate ventilation should be provided /
  Il faut prévoir une ventilation suffisante pour compenser les pertes par échauffement.
- Observe the mounting spaces. / *Les espaces libres doivent être respectés.*
- Use 60/75°C copper wire only. The accessory cables provided by Jenaer Antriebstechnik fulfill these requirements. /
  N'utiliser que des câbles à âme cuivre qui résistent à une température de 60/75°C. Les câbles proposés par Jenaer Antriebstechnik dans son programme d'accessoires, respectent ces exigences.
- At installation locations with permanent vibrations or shocks damping measures should be taken into consideration. /
  Dans des implantions exposées à des vibrations continues ou des chocs, il faut vérifier si des mesure de réduction des phénomènes vibratoires doivent être prises.

5.1.2 Dimensions

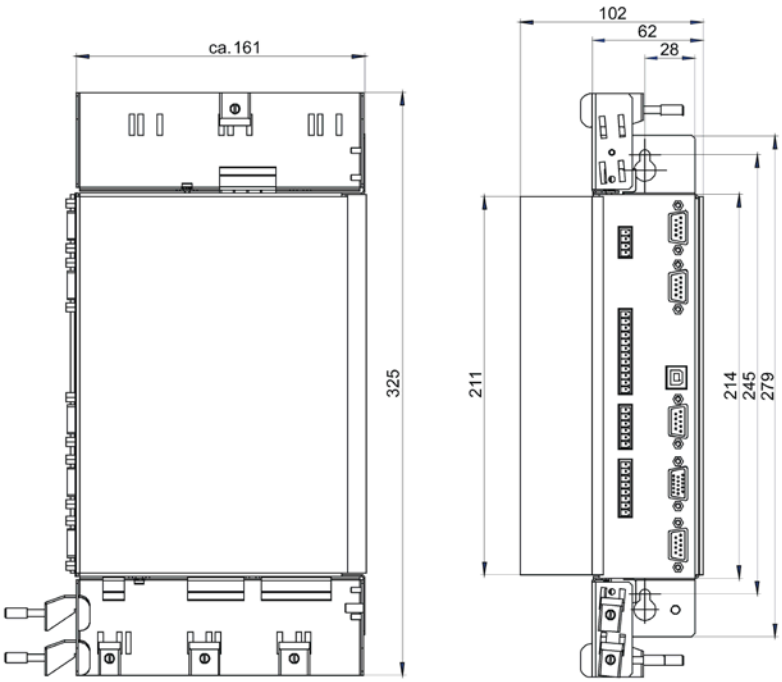

Fig. 5.1: Dimensions of ECOVARIO® 214 + 414 [mm], upper shield optional

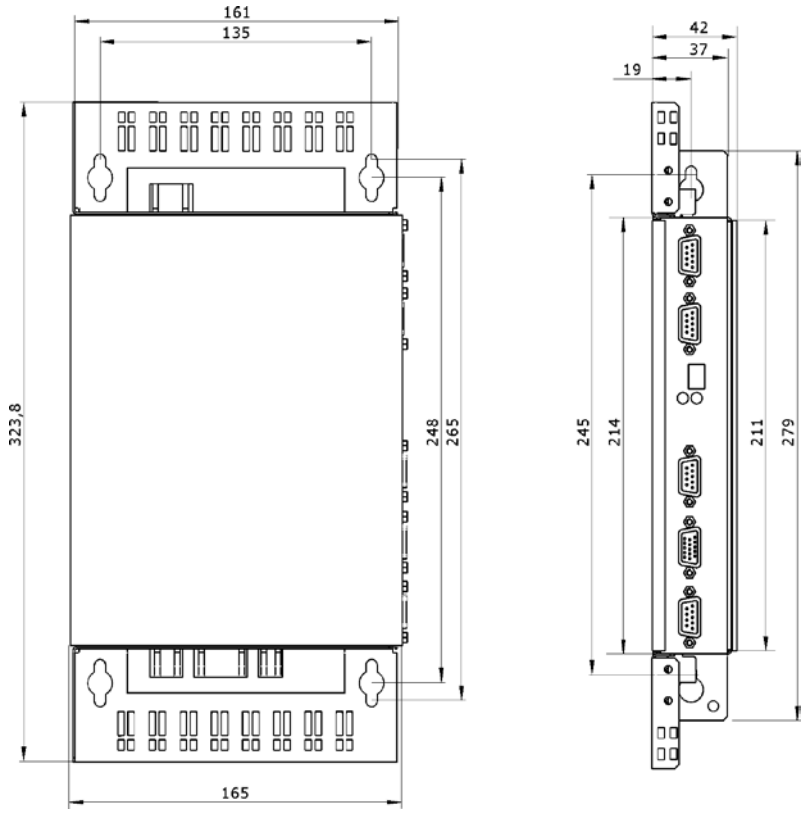

Fig. 5.2: Dimensions of ECOVARIO® 114 [mm], upper shield optional

5.1.3 Assembly

Basically, ECOVARIO® is intended for **vertical** mounting (motor connector X5 on the bottom). In this mounting position devices can be operated with natural convection at ambient temperatures of up to 40°C. If high output power is required an additional heat sink might be necessary (cf. chapter 9.1.1). The ECOVARIO with STO function has to be mounted in a cabinet which conforms to protection class IP54 (or in a comparable environment).
Cable clamps and side metal sheets assure that the connecting cables are laid EMC conform by connecting the cable shield extensively to chassis earth.
The shields with cable clamps shown in fig. 5.3 are available as accessories (see table 9.1). The lower shield is mandatory, the upper shield normally is only necassary if a ballast circuit is connected. It is important that the air flow is not disturbed by components above or below the servo amplifiers. The distance between the servo amplifers has to be at least 3 mm. For ECOVARIO 114, the distance can be increased in order to achieve a good access to the connectors at the bottom of the device.
If a heat sink is used for ECOVARIO® 214 or ECOVARIO® 414, the mounting space will increase by 40 mm.
The surface of the mounting plate has to be conductive (e.g. zinc plated). Varnished mounting plates must not be used.

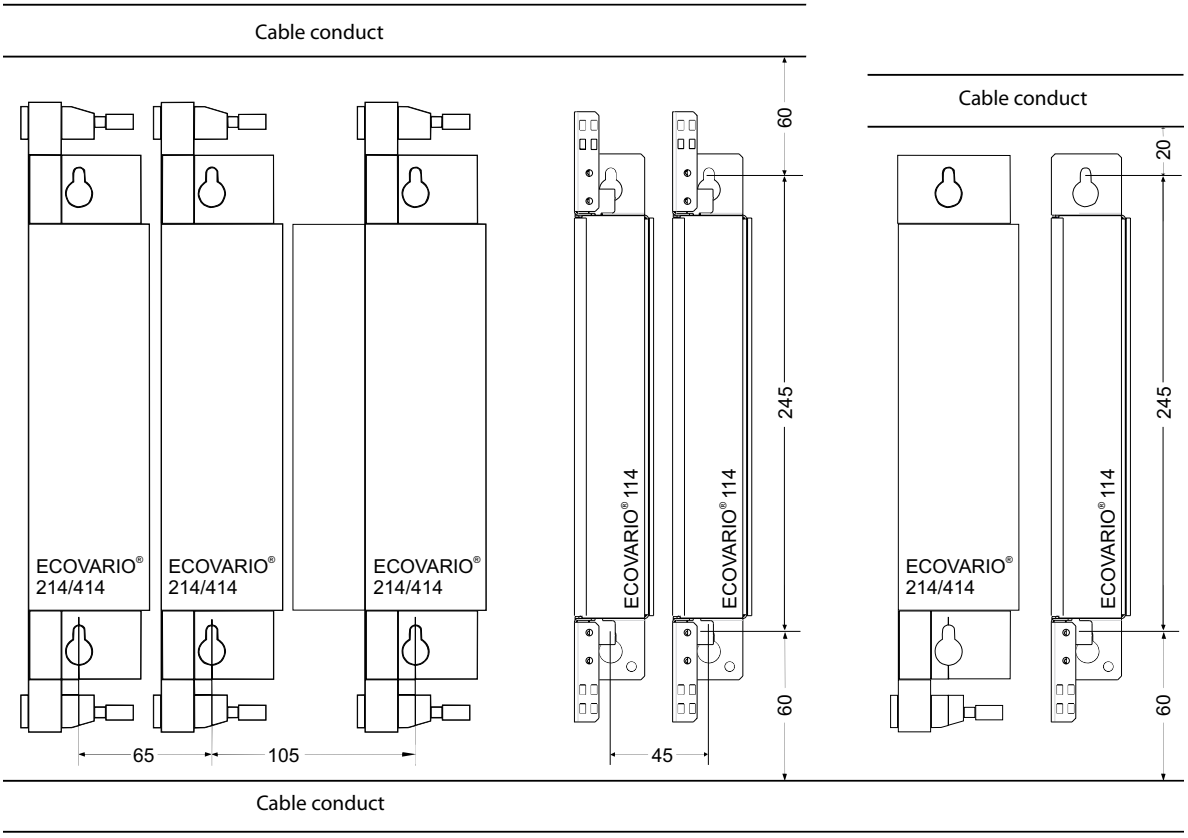

Fig. 5.3: Mounting dimensions cabinet, width, minimum spacing [mm]

To calculate the minimal mounting depth (fig. 5.4, dim A) the form of the connectors (cable outlet direction) and the minimum bending radii of the connecting cables at the sub-D connectors have to be regarded.

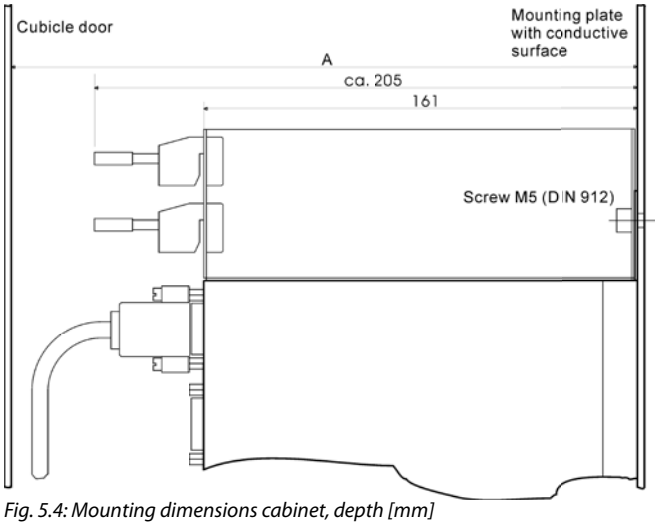

Fig. 5.4: Mounting dimensions cabinet, depth [mm]

5.2 Electrical installation

5.2.1 Important notes

All installation work may only be carried out if the machine or plant is not live and protected against restart.

Never exceed the maximum rated voltage at the X6 connector!
ECOVARIO® 114 A x-xx-xxx xxx: U_{Netz} max. 48 V_{AC} (+10 %)
ECOVARIO® 214 A x-xx-xxx xxx: U_{Netz} max. 105 V_{AC} (+10 %)
ECOVARIO® 414 A x-xx-xxx xxx : U_{Netz} max. 230 V_{AC} (+10 %)

The guarding of the DC or AC supply and the 24 V logic voltage should be carried out by the user.
Servo amplifier and motor have to be properly grounded. The protective earth conductor must have at least the same diameter as the supply cables. The servo amplifier should be mounted onto a conductive (not varnished) metal mounting plate.

When the device is used in an UL environment: ECOVARIO 114 Ax-xJ-xxx xxx is suitable for use on a circuit capable of delivering not more than 5 kA_{RMS} symmetrical amperes,
70 V_{DC} maximum when protected by (DIVQ / 7) listed circuit breaker, max. 10 A
48 V_{AC} maximum when protected by (DIVQ / 7) listed circuit breaker, max. 10 A
70 V_{DC} maximum when protected by (JDDZ / 7) listed fuse, max. 10 A.
48 V_{AC} maximum when protected by (JDDZ / 7) listed fuse, max. 10 A

When the device is used in an UL environment: ECOVARIO 214 Ax-xJ-xxx xxx is suitable for use on a circuit capable of delivering not more than 5 kA_{RMS} symmetrical amperes, 105 V_{AC} maximum when protected by (DIQV) listed circuit breaker rated 105 V_{AC} and 10 A maximum.

When the device is used in an UL environment: ECOVARIO 414 Ax-xJ-xxx xxx is suitable for use on a circuit capable of delivering not more than 5 kA_{RMS} symmetrical amperes, 240 V_{AC} maximum when protected by (DIQV) listed circuit breaker rated 240 V_{AC} and 10 A maximum.

5.2.2 EMC compliant installation

The supply connection of the machine should be equipped with an appropriate RFI suppression filter. Always use shielded cables. To connect the shield as effective as possible to earth use the original ECOVARIO® shield set (s. table 9.1 „Original accessories ECOVARIO®“).
Metal parts in the cabinet have to be interconnected extensively and and be conductive regarding HF. Used relays, contactors, solenoids etc. have to be protected against overvoltage. Supply cables and motor cables must be laid in a proper distance of control cables.

5.2.3 Connection diagram

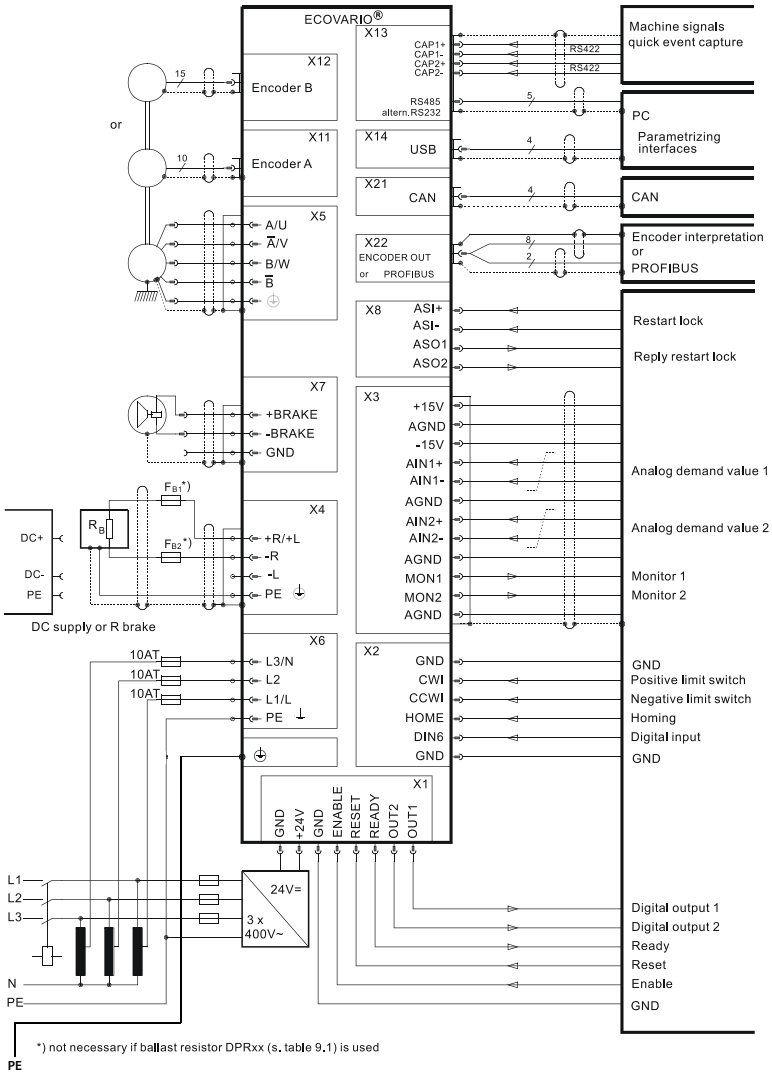

Fig. 5.5a: Connection diagram ECOVARIO® 414

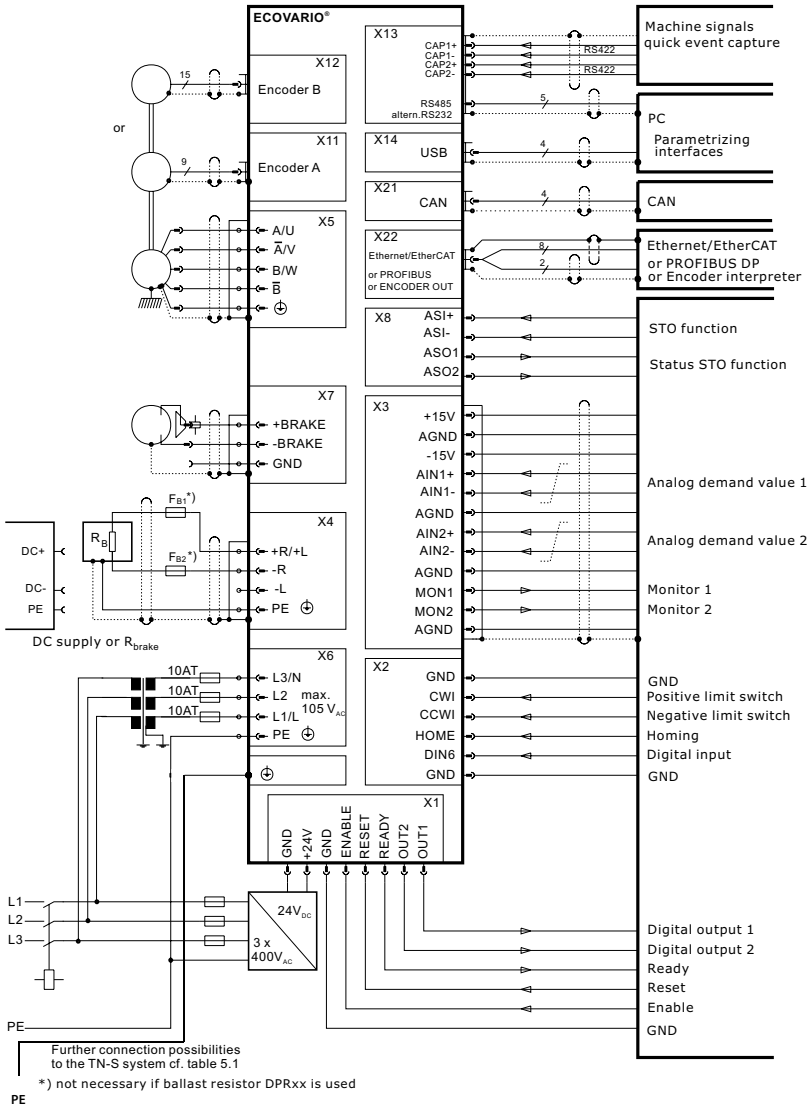

Fig. 5.5b: Connection diagram ECOVARIO® 214

Note: The protective earth connection (PE) of the ECOVARIO® can be implemented in two different ways and thus complies to EN 60204-1, Chap. 8.2.8:

- ➲ via the stud at the bottom of the housing with a wire gauge of min. 10mm²
- ➲ via two PE wires independent of each other with the power connection wire gauge of the device (1 at the supply, connector X6, the other at the stud at the bottom of the housing)

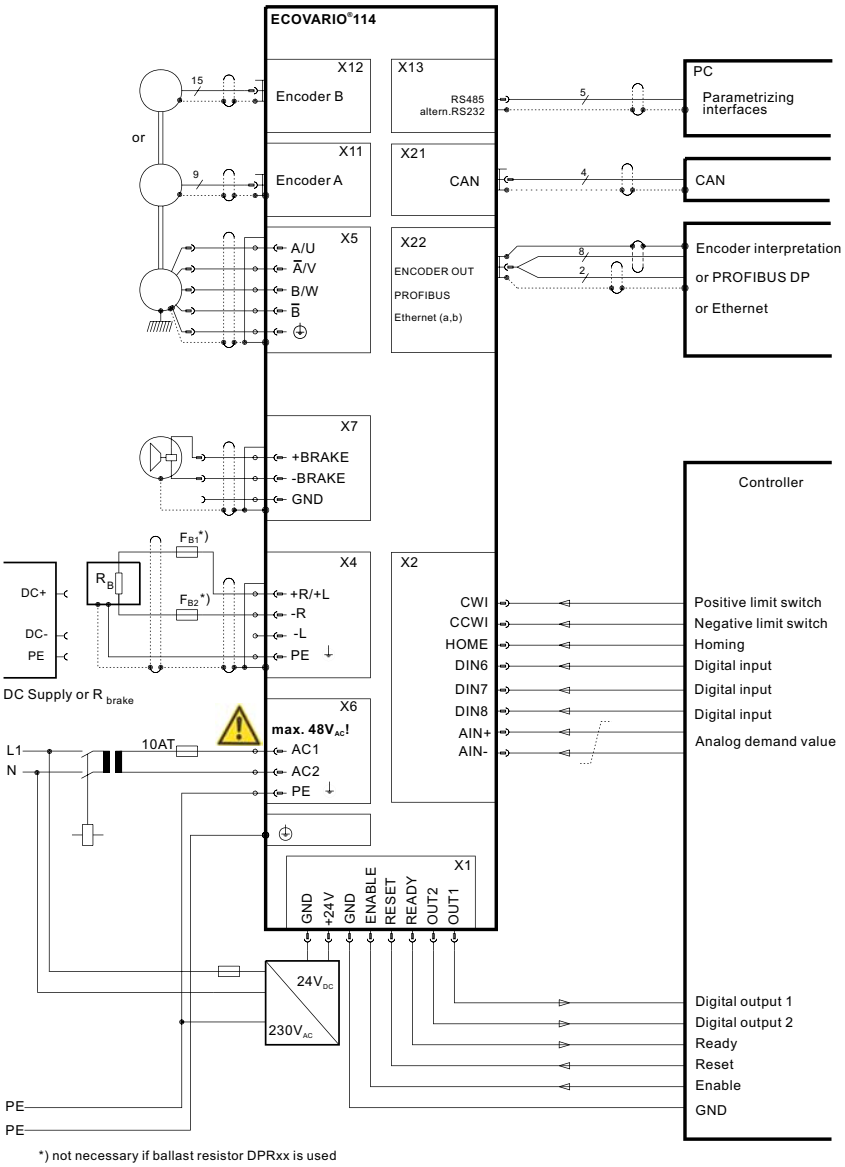

Fig. 5.6: Connection diagram ECOVARIO® 114

5.2.4 Types of lines

NOTICE / *PRUDENCE*	The servo amplifiers must only be connected to supply voltages according to their data sheet. Higher voltages may destroy the units.	*Il faut respecter les tensions d'alimentation maxi des différents types d'ECOVARIO® détaillées dans les fiches techniques.*

The servo amplifiers must only be connected to supply voltages according to the data sheet. Higher voltages may destroy the units.
ECOVARIO® 414 servo amplifiers can be connected 1-phase directly to TN or TT systems with 230 V_{AC} voltage between phase and neutral conductor.
The unit can be connected to 400 V_{AC} TN or TT systems with earthed neutral via autotransformers. For

other systems (asymmetrically grounded or not grounded) it is necessary to use an isolation transformer. Using isolation transformers isolation we strongly recommend to ground the negative pole of the DC link. Using autotransformers it is important that all components of the drive system such as rectifier and ballast circuits, motors etc. meet the requirements of the insulation.

Table 5.1: Possibilities of connecting ECOVARIO® to the TN-S system

ECOVARIO® type	Circuit diagrams (without contactors, fuses and filters)
ECOVARIO® 414 A x-xx-xxx xxx 1-phase supply directly at 200 V_{AC} system	
ECOVARIO® 414 A x-xx-xxx xxx 3-phase supply via isolation transformer or autotransformer	
ECOVARIO® 414 B x-xx-xxx xxx DC supply via 1-phase suppliedrectifier module with ballast circuit	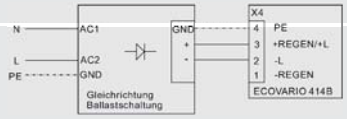
ECOVARIO® 414 B x-xx-xxx xxx DC supply via 3-phase supplied rectifier module with ballast circuit	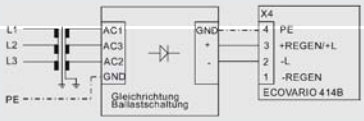
ECOVARIO® 114/214 A x-xx-xxx xxx 1-phase supply via isolation transformer (Using an autotransformer the motor must have an appropriate insulation class.)	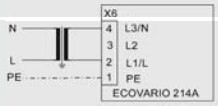
ECOVARIO® 214 A x-xx-xxx xxx 3-phase supply via isolation transformer (Using an autotransformer the motor must have an appropriate insulation class.)	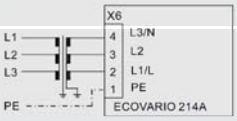
ECOVARIO® 114/214 B x-xx-xxx xxx DC supply via 1-phase supplied rectifier module with ballast circuit (Connect ECOBRAX 200-BA-xxx only via isolation transformers.)	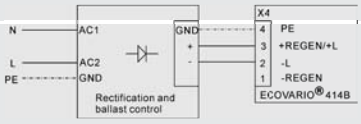
ECOVARIO® 114/214 B x-xx-xxx xxx DC supply via 3-phase supplied rectifier module with ballast circuit (Connect ECOBRAX only via isolation transformers.)	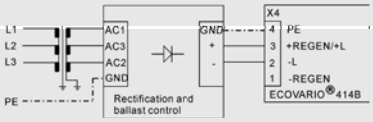
Connecting an ECOVARIO® with DC supply to te DC link of an ECOVARIO® with AC supply it is important to take care that the total amount of supply power does not exceed the maximum rated input power at the ECOVARIO® xxxAx-xx-xxx xxx.	
ECOVARIO® 214/414 Ax-xx-xxx xxx and ECOVARIO® xxx Bx-xx-xxx xxx DC supply via the DC link of a system supplied ECOVARIO®	

5.2.5 Operation with residual current devices

In case of a fault to frame over the internal rectifier of a multi-phase driven servo amplifier the residual current may block the protective function of an AC sensitive or pulse current sensitive earth-leakage circuit breaker. Residual currents cause a pre-magnetization of the transformer core and thus increase the the tolerance for residual currents.

To meet the requirements of EN 61800-5-1 we recommend therefore the use of the following earth-leakage circuit breakers depending on the application:

- universal RCDs (type B) in plant with 3-phase power system connection of the servo amplifiers (L1/L2/L3)
- pulsating RCDs (type A) in plant with 1-phase power system connection of the servo amplifier (L/N)

If the leakage current is too high it may lead to unintentional activation of the RCD even in faultless operation. High leakage currents may be caused by:

- capacitative compensating currents over the cable shields if the motor cables are very long
- simultaneous switch in of several servo amplifiers
- use of interference filters with high leakage current

Note: The leakage current of ECOVARIO® is higher than 3.5 mA.

Measures to reduce high leakage currents:

- use of EMC filters with low leakage current
- use of a 4 conductor filter in systems where there is a neutral
- avoidance of asymmetrical load of the phases; several 1 phase operated units should be shared equally between the three phases
- shielded motor cables should be as short as possible
- In plant with several servo amplifiers a sinusoidal filter should be used instead of single EMC filters.
- In plant with several servo amplifiers not all units should be switched on at the same time.

6 Interfaces

6.1 Overview

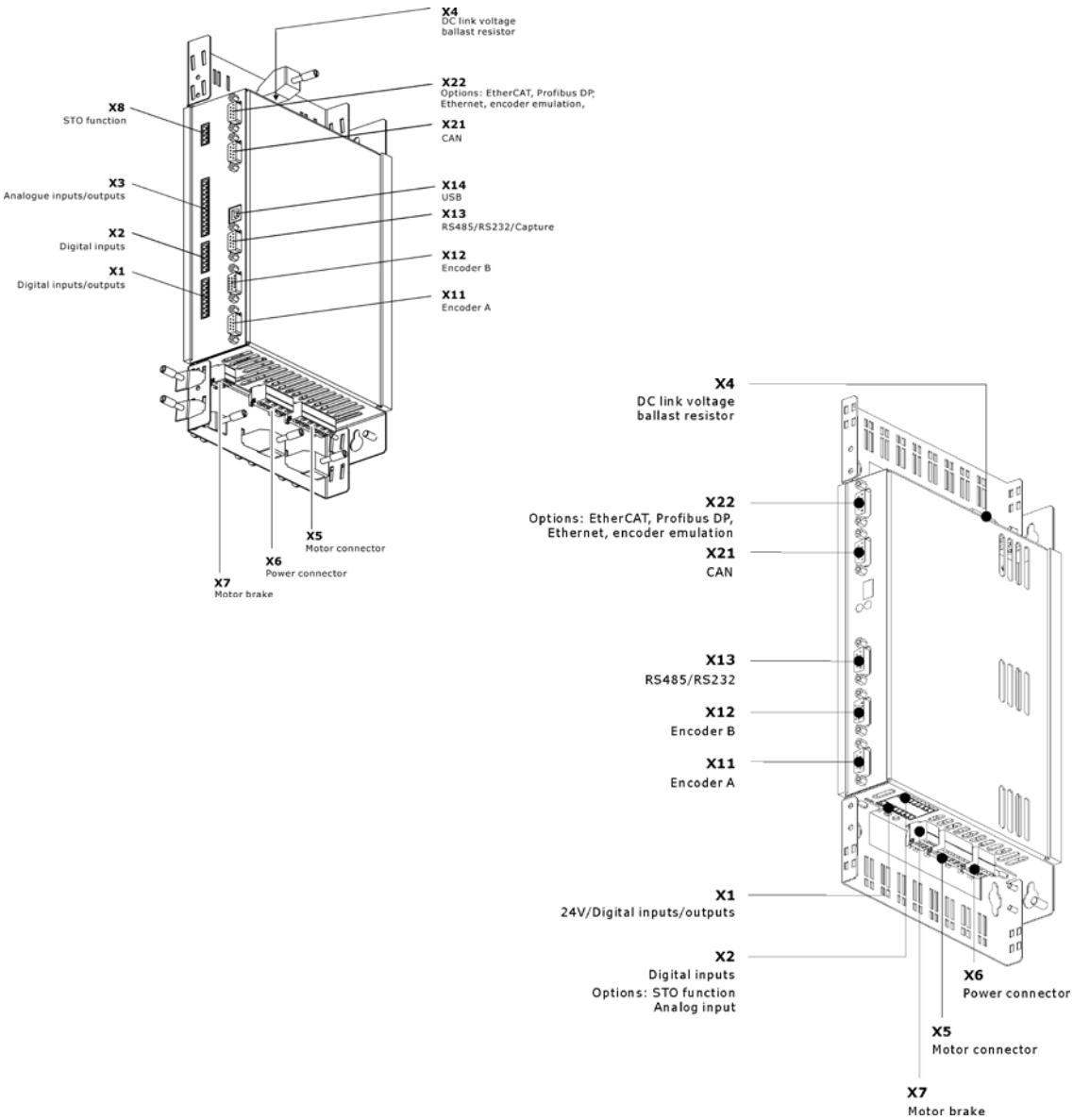

Fig. 6.1: Order of the interfaces of ECOVARIO® 214/414 (top) and ECOVARIO® 114 (bottom)

On the next page, the available interfaces for all ECOVARIO® types are shown in an overview table. Subsequently, detailed descriptions of each interface with pin assignment and block diagram are provided.

For the interfaces X1 to X8 a mating connector set is available (see table 9.1 „Original accessories ECOVARIO®“). To simplify the handling all mating connectors are labelled.

Table 6.1: Overview of interfaces ECOVARIO 114, ECOVARIO 214, ECOVARIO 414

*) analog input only Order designation	CAN	EtherCAT®	Ethernet	Profibus DP	RS485	RS232	USB	Safety function STO	Encoder input A (incr.)	Encoder input B	Encoder output	Digital inputs/ outputs	Analog inputs /outputs	Motor connect.	Holding brake	AC power supply	DC power supply
ECOVARIO®114RN-AJ-000-000	X21				X13				X11	X12	X22	X1, X2	X2*	X5	X7	X6	X4
ECOVARIO®114RN-BJ-000-000	X21					X13			X11	X12	X22	X1, X2	X2*	X5	X7	X6	X4
ECOVARIO®114RR-AJ-000-000	X21				X13			X2	X11	X12	X22	X1, X2		X5	X7	X6	X4
ECOVARIO®114RR-BJ-000-000	X21					X13		X2	X11	X12	X22	X1, X2		X5	X7	X6	X4
ECOVARIO®114RN-FJ-000-000	X21			X22	X13				X11	X12		X1, X2	X2*	X5	X7	X6	X4
ECOVARIO®114RN-GJ-000-000	X21			X22		X13			X11	X12		X1, X2	X2*	X5	X7	X6	X4
ECOVARIO®114RR-FJ-000-000	X21			X22	X13			X2	X11	X12		X1, X2		X5	X7	X6	X4
ECOVARIO®114RR-GJ-000-000	X21			X22		X13		X2	X11	X12		X1, X2		X5	X7	X6	X4
ECOVARIO®114RN-KJ-000-000	X21		X22		X13				X11	X12		X1, X2	X2*	X5	X7	X6	X4
ECOVARIO®114RN-LJ-000-000	X21		X22			X13			X11	X12		X1, X2	X2*	X5	X7	X6	X4
ECOVARIO®114RR-KJ-000-000	X21		X22		X13			X2	X11	X12		X1, X2		X5	X7	X6	X4
ECOVARIO®114RR-LJ-000-000	X21		X22			X13		X2	X11	X12		X1, X2		X5	X7	X6	X4
ECOVARIO®114RN-PJ-000-000	X21	X22			X13				X11	X12		X1, X2	X2*	X5	X7	X6	X4
ECOVARIO®114RN-QJ-000-000	X21	X22				X13			X11	X12		X1, X2	X2*	X5	X7	X6	X4
ECOVARIO®114RR-PJ-000-000	X21	X22			X13			X2	X11	X12		X1, X2		X5	X7	X6	X4
ECOVARIO®114RR-QJ-000-000	X21	X22				X13		X2	X11	X12		X1, X2		X5	X7	X6	X4
ECOVARIO®214AN-AJ-000-000	X21				X13		X14		X11	X12	X22	X1, X2	X3	X5	X7	X6	X4
ECOVARIO®214AN-BJ-000-000	X21					X13	X14		X11	X12	X22	X1, X2	X3	X5	X7	X6	X4
ECOVARIO®214AR-AJ-000-000	X21				X13		X14	X8	X11	X12	X22	X1, X2	X3	X5	X7	X6	X4
ECOVARIO®214AR-BJ-000-000	X21					X13	X14	X8	X11	X12	X22	X1, X2	X3	X5	X7	X6	X4
ECOVARIO®214AN-FJ-000-000	X21			X22	X13		X14		X11	X12		X1, X2	X3	X5	X7	X6	X4
ECOVARIO®214AN-GJ-000-000	X21			X22		X13	X14		X11	X12		X1, X2	X3	X5	X7	X6	X4
ECOVARIO®214AR-FJ-000-000	X21			X22	X13		X14	X8	X11	X12		X1, X2	X3	X5	X7	X6	X4
ECOVARIO®214AR-GJ-000-000	X21			X22		X13	X14	X8	X11	X12		X1, X2	X3	X5	X7	X6	X4
ECOVARIO®214AN-KJ-000-000	X21		X22		X13		X14		X11	X12		X1, X2	X3	X5	X7	X6	X4
ECOVARIO®214AN-LJ-000-000	X21		X22			X13	X14		X11	X12		X1, X2	X3	X5	X7	X6	X4
ECOVARIO®214AR-KJ-000-000	X21		X22		X13		X14	X8	X11	X12		X1, X2	X3	X5	X7	X6	X4
ECOVARIO®214AR-LJ-000-000	X21		X22			X13	X14	X8	X11	X12		X1, X2	X3	X5	X7	X6	X4
ECOVARIO®214AN-PJ-000-000	X21	X22			X13		X14		X11	X12		X1, X2	X3	X5	X7	X6	X4
ECOVARIO®214AN-QJ-000-000	X21	X22				X13	X14		X11	X12		X1, X2	X3	X5	X7	X6	X4
ECOVARIO®214AR-PJ-000-000	X21	X22			X13		X14	X8	X11	X12		X1, X2	X3	X5	X7	X6	X4
ECOVARIO®214AR-QJ-000-000	X21	X22				X13	X14	X8	X11	X12		X1, X2	X3	X5	X7	X6	X4
ECOVARIO®414AN-AJ-000-000	X21				X13		X14		X11	X12	X22	X1, X2	X3	X5	X7	X6	X4
ECOVARIO®414AN-BJ-000-000	X21					X13	X14		X11	X12	X22	X1, X2	X3	X5	X7	X6	X4
ECOVARIO®414AR-AJ-000-000	X21				X13		X14	X8	X11	X12	X22	X1, X2	X3	X5	X7	X6	X4
ECOVARIO®414AR-BJ-000-000	X21					X13	X14	X8	X11	X12	X22	X1, X2	X3	X5	X7	X6	X4
ECOVARIO®414AN-FJ-000-000	X21			X22	X13		X14		X11	X12		X1, X2	X3	X5	X7	X6	X4
ECOVARIO®414AN-GJ-000-000	X21			X22		X13	X14		X11	X12		X1, X2	X3	X5	X7	X6	X4
ECOVARIO®414AR-FJ-000-000	X21			X22	X13		X14	X8	X11	X12		X1, X2	X3	X5	X7	X6	X4
ECOVARIO®414AR-GJ-000-000	X21			X22		X13	X14	X8	X11	X12		X1, X2	X3	X5	X7	X6	X4
ECOVARIO®414AN-KJ-000-000	X21		X22		X13		X14		X11	X12		X1, X2	X3	X5	X7	X6	X4
ECOVARIO®414AN-LJ-000-000	X21		X22			X13	X14		X11	X12		X1, X2	X3	X5	X7	X6	X4
ECOVARIO®414AR-KJ-000-000	X21		X22		X13		X14	X8	X11	X12		X1, X2	X3	X5	X7	X6	X4
ECOVARIO®414AR-LJ-000-000	X21		X22			X13	X14	X8	X11	X12		X1, X2	X3	X5	X7	X6	X4
ECOVARIO®414AN-PJ-000-000	X21	X22			X13		X14		X11	X12		X1, X2	X3	X5	X7	X6	X4
ECOVARIO®414AN-QJ-000-000	X21	X22				X13	X14		X11	X12		X1, X2	X3	X5	X7	X6	X4
ECOVARIO®414AR-PJ-000-000	X21	X22			X13		X14	X8	X11	X12		X1, X2	X3	X5	X7	X6	X4
ECOVARIO®414AR-QJ-000-000	X21	X22				X13	X14	X8	X11	X12		X1, X2	X3	X5	X7	X6	X4

6.2 Control signals

The control signals are programmable (cf. manual „Object Dictionary ECOVARIO® + ECOSTEP®“).

6.2.1 X1: Digital inputs and outputs, 24 V

Table 6.1: Pin assignment connector X1

Signal	Pin	Description	
OUT1	1	Digital output 1 $I_{O\,max}$ = 0,5 A	I_{Ototal} = max. 1 A
OUT2	2	Digital output 2 I_{Omax} = 0,5 A	
READY (OUT3)	3	Ready/Digital output 3 I_{Omax} = 0,5 A	
RESET (DIN1)	4	Reset/Digital input 1	
ENABLE (DIN2)	5	Enable/Digital input 2	
GND	6	24 V ground	
+24V	7	24 V supply	
GND	8	24 V ground	

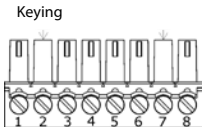

Fig. 6.2: Mating connector X1: (all ECOVARIO® types) MC 1,5/8-ST-3,81 CN2,7 BDNZX1, 1755402 Phoenix

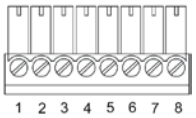

Fig. 6.3: Mating connector X1: (ECOVARIO® 214/414 only) MC 1,5/8-ST-3,81, 1803633 Phoenix

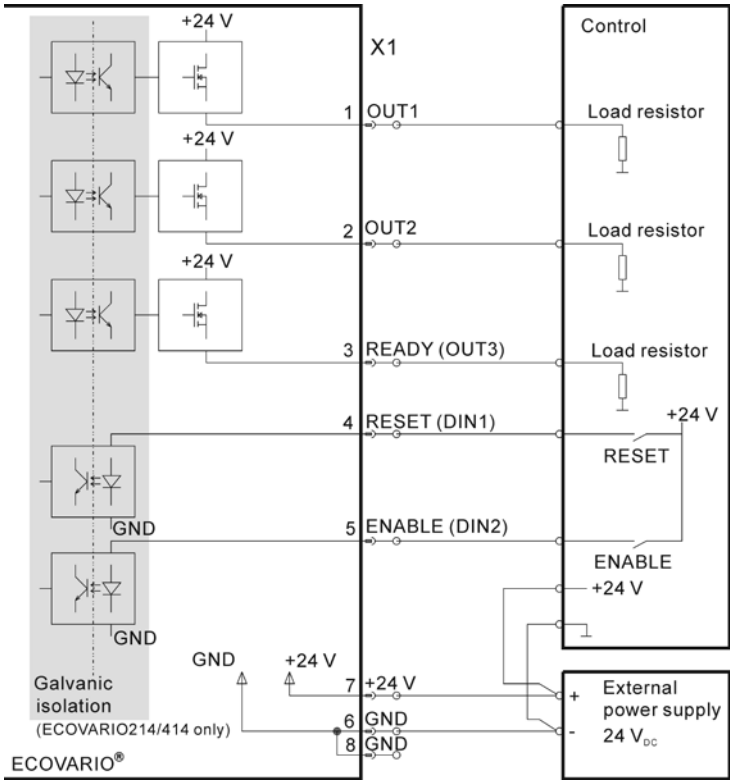

Fig. 6.4: Connector X1: Circuit of the digital inputs and outputs

6.2.2 X2: Digital Inputs

6.2.2.1 ECOVARIO® 214/414

Table 6.2: Pin assignment connector X2 of ECOVARIO® 214/414

Signal	Pin	Description
GND	1	24 V ground
CWI (DIN3)	2	Positive limit switch
CCWI (DIN4)	3	Negative limit switch
HOME (DIN5)	4	Homing switch
DIN6	5	Digital input 6
GND	6	24 V ground

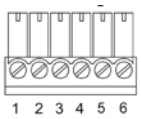

Fig. 6.5: Mating connector X2: (ECOVARIO® 214/414) MC 1,5/6-ST-3,81, 1803617 Phoenix

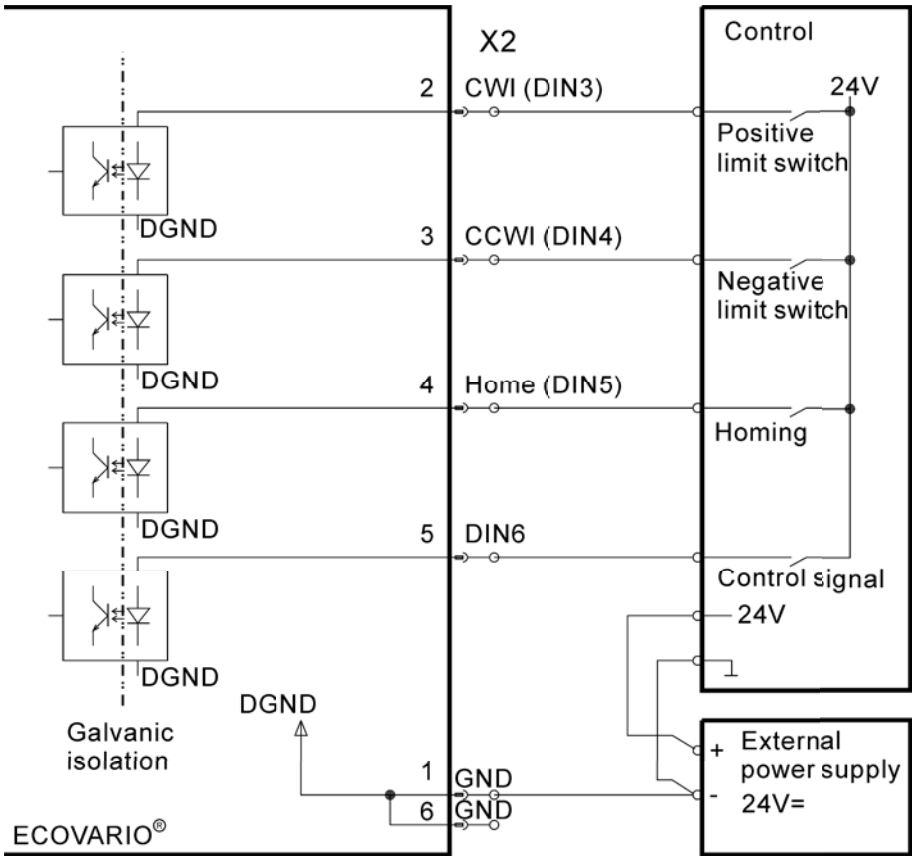

Fig. 6.6: Connector X2: Circuit of the digital inputs of ECOVARIO® 214/414

6.2.2.2 ECOVARIO® 114

Table 6.3: Pin assignment connector X2 of ECOVARIO® 114

Signal	Pin	Description	ECOVARIO 114 xR
CWI (DIN3)	1	Positive limit switch	
CCWI (DIN4)	2	Negative limit switch	
HOME (DIN5)	3	Homing switch	
DIN6 / ASI	4	Digital input 6	Input contact for STO function
DIN7	5	Digital input 7	
DIN8	6	Digital input 8	
AIN+ / ASO1	7	differential analog input	Output contact for STO function (max. 200 mA)
AIN- / ASO2	8		

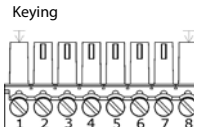

Bild 6.7: Mating connector X2 (ECOVARIO® 114): MC 1,5/8-ST-3,81 CN1,8 BDNZX2, 17 55 41 5 Phoenix

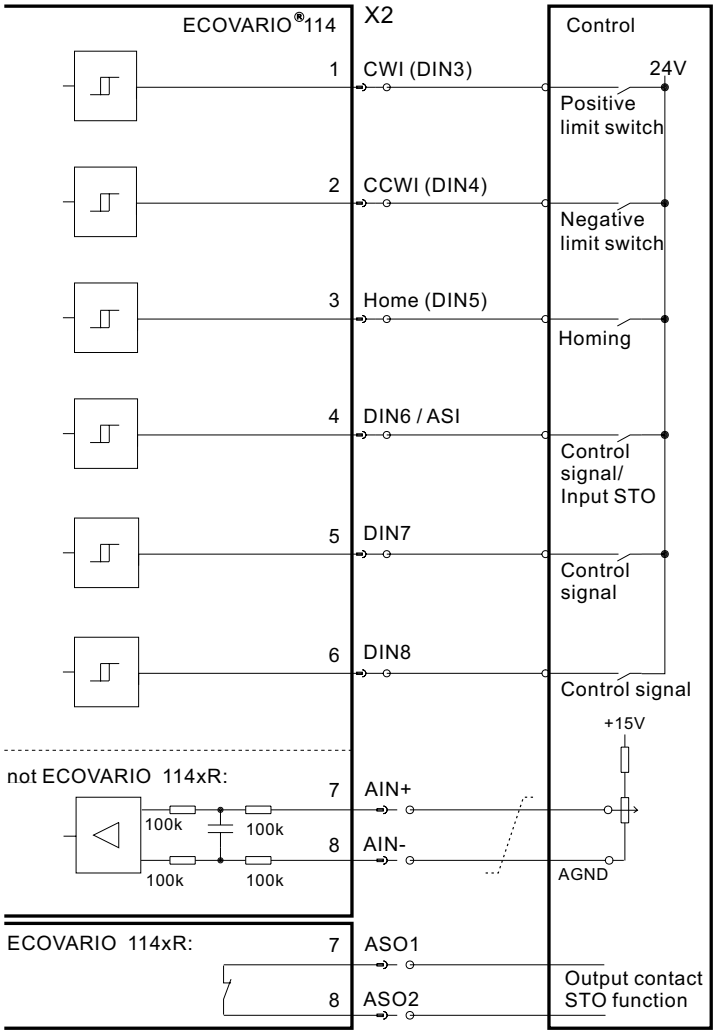

Notes:
The digital GND signal (DGND) is available at connector X1.
Signals ASI, ASO1, ASO2 are available at ECOVARIO® 114 xR only.

Fig. 6.8 Connector X2: Circuit of the digital inputs and outputs and of the analog input of ECOVARIO® 114

6.2.3 X3: Analog inputs and outputs (ECOVARIO® 214/414 only)

Table 6.4: Pin assignment Connector X3

Signal	Pin	Description	
+15V	1	+15 V analog via 1 kΩ	for supply of external control elements at AIN1 and AIN2
AGND	2	Analog ground	
-15V	3	-15 V analog via 1 kΩ	
AIN1+	4	Analog input 1+	differential AIN1
AIN1-	5	Analog input 1-	
AGND	6	Analog ground	
AIN2+	7	Analog input 2+	differential AIN2
AIN2-	8	Analog input 2-	
AGND	9	Analog ground	
MON1	10	Analog monitor 1	
MON2	11	Analog monitor 2	
AGND	12	Analog ground	

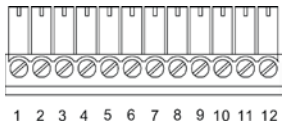

Fig. 6.9: Mating connector X3: MC 1,5/12-ST-3,81 18 03 67 5 Phoenix

Note: *The analog input signals of ECOVARIO® 114 are located on connector X2 (cf. chapter 6.2.2.2)*

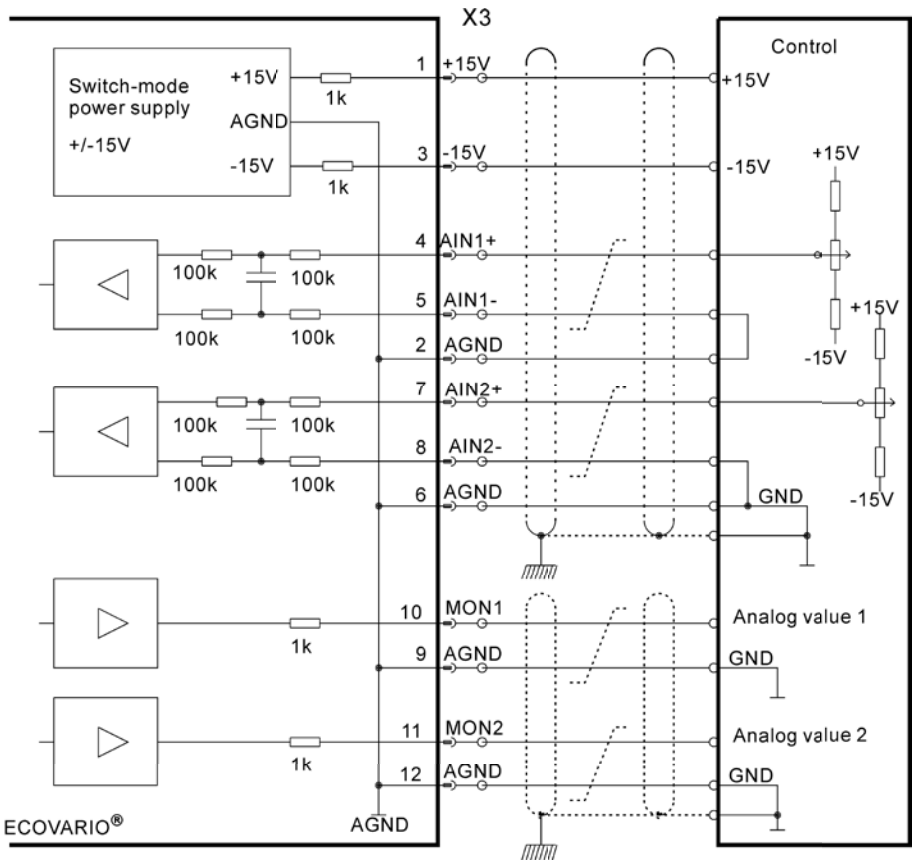

Fig. 6.10: Connector X3: Circuit of the analog inputs and outputs (ECOVARIO® 214/414)

6.3 Power interfaces

6.3.1 X4: DC link voltage and ballast resistor

WARNING / AVERTISSEMENT

Acute danger of life or risk of injury due to high voltages!
Up to 400 V DC voltage at the DC link clamps +L and -L. Never undo and redo electrical connections while they are live. After disconnection from the supply wait at least six minutes. Capacitors can still have dangerous voltages present.

Danger de mort ou danger de blessures par des tensions élevées!
Des tensions qui peuvent aller jusqu'à 400 V DC sont aux bornes +L et -L du circuit intermédiaire. Avant de connecter ou déconnecter, il faut absolument mettre hors tension. La tension résiduelle reste présente dans la charge des condensateurs jusqu'à 6 minutes. Attendez ce temps avant de retirer la prise.

The connector X4 can be used either for connecting a ballast resistor or for direct DC supply. Under certain conditions a connection of a ballast resistor *and* direct DC supply is possible. If you intend to do so please contact our support team.

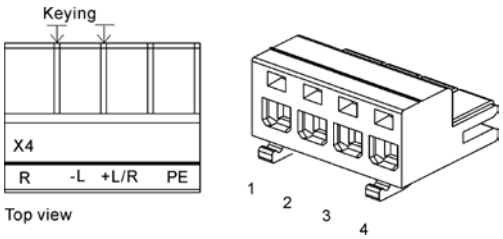

Fig. 6.11: Mating connector X4:
ECOVARIO® 214/414:
ZEC 1,5/4-ST-7,5 C1,2 R1,4 NZX4 19 98 19 5 Phoenix
ECOVARIO® 114:
ZEC 1,5/4-ST-5,0 C1,2 R1,4 4BDNZ4 17 55 37 6 Phoenix

Table 6.4: Pin assignment Connector X4

Signal	Keying	Pin	Description
-R	R	1	- ballast resistor
-L	-L	2	- DC link
+L/+R	+L/R	3	+ DC link/ + ballast resistor
PE	PE	4	PE conductor

External load resistor (at units with AC supply)
The ECOVARIO®214 and 414 servo amplifiers contain no internal ballast resistor. In the ECOVARIO®114, a ballast resistor is integrated (continuous power 0.01 kW), additionally an external resistor can be used. During braking energy is fed back and the DC link voltage increased. If a drive is decelerated from speed ω_1 to speed ω_2 the energy difference E_{BR} is fed back.

$$E_{BR} = \frac{1}{2} J (\omega_1^2 - \omega_2^2) \qquad (1)$$

The maximum regenerable energy E_{N-P} is calculated according to the following formula (2):

$$E_{N-P} = \frac{1}{2} C_L (U_{BUSP}^2 - U_{BUSN}^2) \qquad (2)$$

(see chap. 4.1 „Rated data of the power stage"). A ballast resistor will prevent the DC link voltage from rising up to the limit of the overvoltage trip.
The ECOVARIO® accessory ballast resistors DPRxx-xxx are intrinsically safe, therefore the supply conductors do not have to be fused. Using other ballast resistors both supply conductors have to be equipped with fuses!

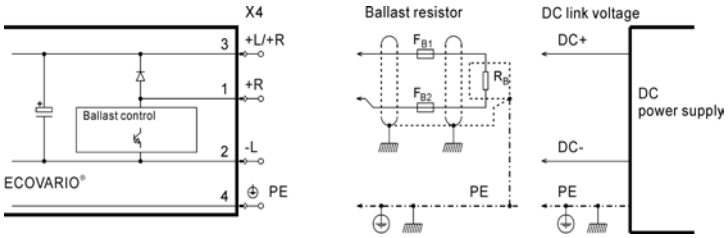

Fig. 6.9: X4: Circuit load resistor and DC link

Table 6.6: Maximum values of ballast circuit

		ECOVARIO®			
		114 R*	114 A	2 14 A	4 14 A
External ballast resistor	Ω	10	10	10	22
Overvoltage trip	V	90	90	200	400
Switch-on threshold ballast	V	85	85	195	395
Switch-off threshold ballast	V	75	75	185	375
Continuous power load circuit	kW	0.02 **	0.1 **	0.5 **	0.5 **
Impulse power load circuit	kW		0.81	4	6

*) in addition to the internal ballast resistor. 0.01 kW without external circuit.

**) For power specifications for the available ECOVARIO® accessory ballast resistors DPRxx-xxx cf. chapter 9.3

Ballast circuit threshold

The switch-on and switch-off thresholds for the ballast resistor shown in Table 6.6 can be reduced by programming.

The objects 0x2701:09 (switch-on threshold) and 0x2701:10 (switch-off threshold) are used for this. The continuous power of the ballast resistor can be set in the objects 0x2701:11 (power) and 0x2701:12 (Ohm value).
For more details please refer to the manual „Object Dictionary ECOVARIO®, ECOSTEP®, ECOMPACT®“.

Units with DC supply
In case of direct DC supply of the DC link, the inrush current is not limited by the servo amplifier. Therefore special limitation measures have to be taken in the external power unit. If energy is regenerated, the power unit must be equipped with a ballast circuit in case the regenerated energy is higher than the energy consumed by all consumers connected to the DC bus.

6.3.2 X5: Motor

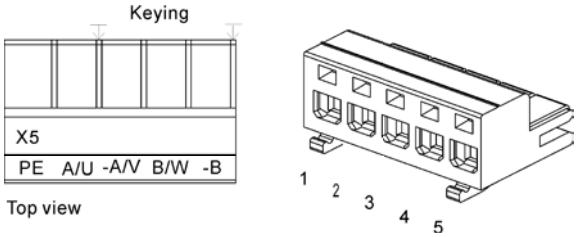

Fig. 6.13: Mating connector X5:
ECOVARIO® 214/414: ZEC 1,5/5-ST-7,5 C2,5 R1,5 NZX5 19 98 17 9 Phoenix
ECOVARIO® 114: ZEC 1,5/5-ST-5,0 C2,5 R1,5 5BDNZ5, 17 55 38 9 Phoenix

Using long cables (>25 m) the losses rise strongly due to the cable capacity. Therefore with long cables the technical data of the drive are reduced, further too high leakage currents can lead to indeliberare activation of the circuit breakers (see chap. 5.2.5 „Operation with residual current devices“).
For all available types of cable see chap. 9.5.

Table 6.7: Pin assignment connector X5

Signal	Keying	Pin	2-phase motor	3-phase motor	DC Motor
Phase A (motor U)	A/U	2	Phase A	Connection U	Conn. DC+
Phase A- (motor V)	-A/V	3	Phase A-	Connection V	Conn. DC-
Phase B+ (motor W)	B/W	4	Phase B	Connection W	free
Phase B- (free)	-B	5	Phase B-	free	free
PE	PE	1	PE conductor		

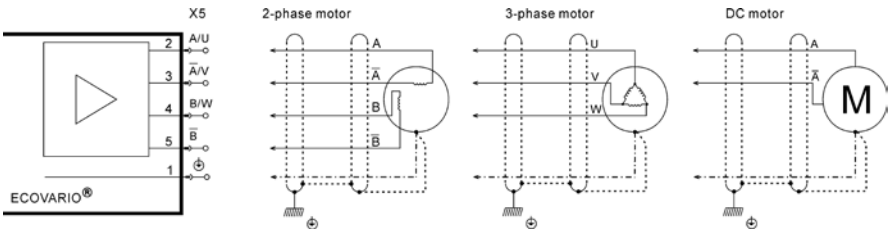

Fig. 6.14: X5: Example for connection with standard cable, e.g.
MOT-61-133-523-xxx (ECOVARIO 214/414)
MOT-43-132-721-xxx (ECOVARIO 114 with motor series 23S)

Connection of motor and brake with one cable

The insulated meshes of the overall shield and of the shield of the brake cable must in any case be connected to the chasis earth or protective earth. Due to improper grounding or free mesh dangerous voltages may occur at the shield.

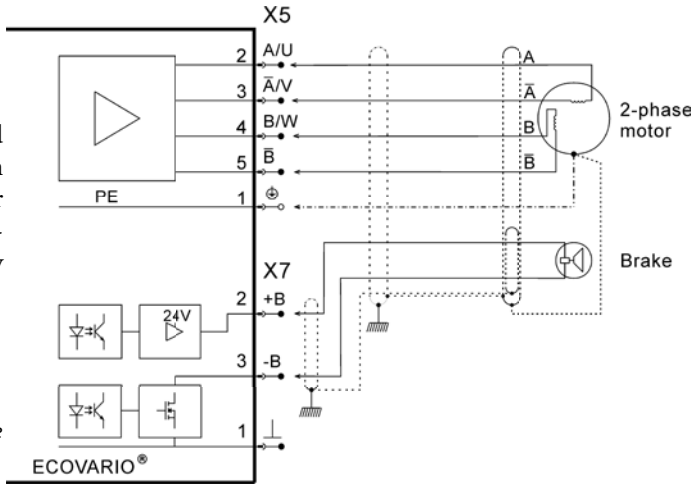

Fig. 6.15: Example for connection with standard cable
MOT63-134-523-xxx (ECOVARIO® 214/414)
MOT34-132-722-xxx (ECOVARIO® 114)

6.3.3 X6: Power connection

6.3.3.1 ECOVARIO® 214/414

Table 6.8: Pin assignment connector X6 of ECOVARIO® 214/414

Signal	Sign	Pin	Description
PE	PE	1	PE conductor
Phase L1/L	L1/L	2	3-phase: phase L1 / 1-phase: phase L
Phase L2	L2	3	3-phase: phase L2 / 1-phase: free
Phase L3/N	L3/N	4	3-phase: phase L3 / 1-phase: neutral N

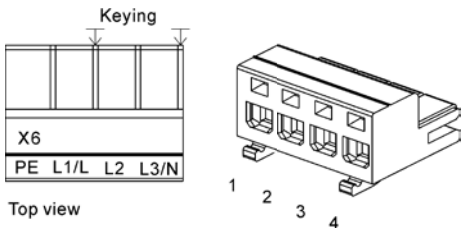

Fig. 6.16: Mating connector X6: ZEC 1,5/4-ST-7,5 C2,4 R1,4 NZX6, 19 98 18 2 Phoenix

WARNING / AVERTISSEMENT

The servo amplifiers ECOVARIO may **never** be directly connected to the 3-phase 400 V_{AC} system. The maximum supply voltages of the various ECOVARIO types according to the name plate and the data sheet must be regarded.

ECOVARIO ne doit pas être connecté directement à l'alimentation 400 V 3 phases!
Notez les tensions d'alimentation maximales des types ECOVARIO individuelles précisés sur la feuille de données et la plaque signalétique.

Inrush-current limiting
The peak inrush-current is limited to maximum 50 A by a temperature-depending resistor. After recharging the DC link the limiting resistor is bridged by a relay contact and thus can cool down during normal operation. Inbetween two switch-on and switch-off sequences must be a delay of at least 10 s. A cyclic switching on and off the servo amplifier by the line contactor is not allowed. During switching on and off the supply voltage the servo amplifier should be in the „ready to switch-on" state.

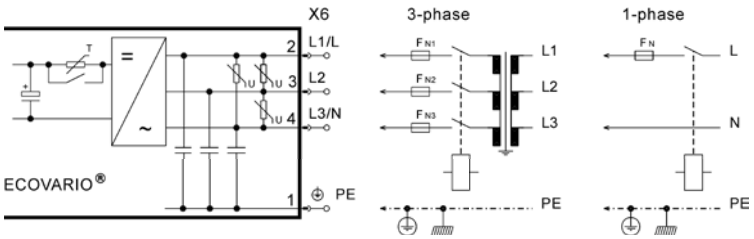

Fig. 6.17: Connector X6, Circuit ECOVARIO® 214/414

Line filter
The user has to make sure to conform to the regulations of the EMC Directive (2004/108/EEC) by appropriate measures (external line filter, EMC compliant wiring).

Fusing
For external fusing please consider the general technical data (cf. chapter 4.2).

When the device is used in an UL environment: ECOVARIO 214 Ax-xJ-xxx xxx is suitable for use on a circuit capable of delivering not more than 5 kA_{RMS} symmetrical amperes, 105 V_{AC} maximum when protected by (DIQV) listed circuit breaker rated 105 V_{AC} and 10 A maximum.

When the device is used in an UL environment: ECOVARIO 414 Ax-xJ-xxx xxx is suitable for use on a circuit capable of delivering not more than 5 kA_{RMS} symmetrical amperes, 240 V_{AC} maximum when protected by (DIQV) listed circuit breaker rated 240 V_{AC} and 10 A maximum.

6.3.3.2 ECOVARIO® 114

Tabelle 6.9: Pin assignment connector X6 of ECOVARIO®114

Signal	Pin	Description
PE	1	PE conductor
AC1	2	AC input 1
AC2	3	AC input 2

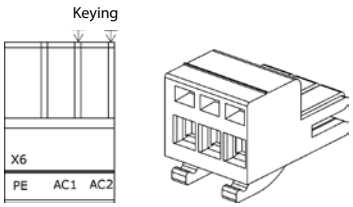

Fig. 6.18: Mating connector X6: ZEC 1,5/3-ST-5,0 C2,3 R1,3 3BDNZ3, 17 55 39 2 Phoenix

WARNING / AVERTISSEMENT	Only AC voltages generated via an isolation transformer are permitted at the AC input of the ECOVARIO 114. The maximum AC supply voltage of 48 V must not be exceeded.	*A l'entrée X6 de ECOVARIO 114 seulement tensions alternatifs sont autorisés, générée par l'intermédiaire d'un transformateur d'isolement. La tension maximale d'alimentation AC est de 48 VAC. Cela ne doit pas être dépassée.*

Inrush-current limiting
The peak inrush-current is limited to maximum 50 A by a temperature-depending resistor. After recharging the DC link the limiting resistor is bridged by a relay contact and thus can cool down during normal operation.

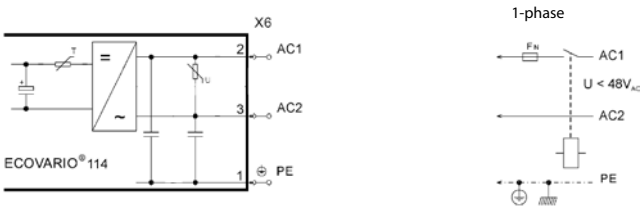

Fig. 6.19: Connector X6, circuit of ECOVARIO®114

Inbetween two switch-on and switch-off sequences must be a delay of at least 10 s. A cyclic switching on and off the servo amplifier by the line contactor is not allowed. During switching on and off the supply voltage the servo amplifier should be in the „ready to switch-on" state.

Line filter
The user has to make sure to conform to the regulations of the EMC Directive (2004/108/EEC) by appropriate measures (external line filter, EMC compliant wiring).

Fusing
For external fusing please consider the general technical data (cf. chapter 4.2).

When the device is used in an UL environment: ECOVARIO 114 Ax-xJ-xxx xxx is suitable for use on a circuit capable of delivering not more than 5 kA_{RMS} symmetrical amperes,
48 V_{AC} maximum when protected by (DIVQ / 7) listed circuit breaker, max. 10 A
48 V_{AC} maximum when protected by (JDDZ / 7) listed fuse, max. 10 A.

6.3.4 X7: Brake

Table 6.10: Pin assignment connector X7

Signal	Sign	Pin	
GND		1	
Brake+	+B	2	$I_{max\ peak}$ = 1 A $I_{max\ cont.}$ = 0.5 A
Brake-	-B	3	

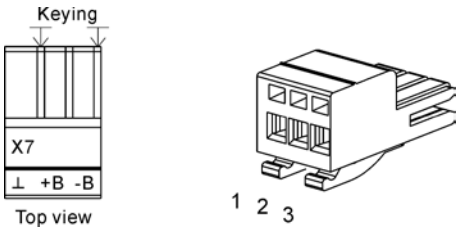

Fig. 6.20: Mating connector X7:
ZEC 1,0/3-ST-3,5 C1,3 R1,3 NZX7, 19 98 20 5 Phoenix

If the control mode is choppered the holding current is reduced after pulling the brake.

If the current consumption of the brake is higher, the static version is suitable for connecting a relay (cf. fig. 6.22).

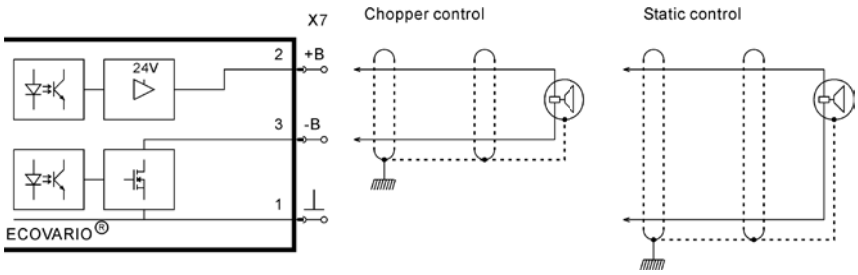

Fig. 6.21: Brake connection, brake current $I_{max} \leq 0{,}5$ A

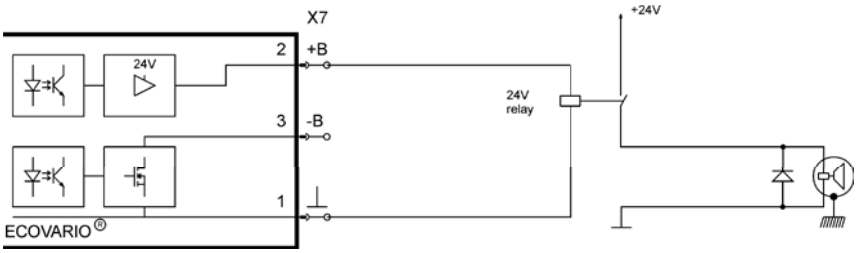

Fig. 6.22: Brake connection, brake current $I_{max} > 0{,}5$ A

6.4 Safety functions

6.4.1 Restart lock / Safe torque off (STO)

6.4.1.1 ECOVARIO 214/414

The versions ECOVARIO® x14 xR-xx-xxx xxx of the servo amplifiers ECOVARIO® 214 and ECOVARIO® contain the safety function „Safe Torque Off“ (STO) according to EN 61800-5-2 und EN ISO 13849-1: 2006. The function also conforms to an uncontrolled stop according to category 0 of IEC 60204-1.The safety function is used to prevent the drive from starting indeliberately.

WARNING / AVERTISSEMENT	The „Safe Torque Off“ function does not switch off the power supply of the DC link voltage of the servo amplifier. Thus, maintenance of electrical parts of the motor or the servo amplifer may only be carried out after the drive system has been disconnected from the power supply.	*La fonction „Safe Torque Off“ ne coupe pas la tension du circuit intermédiaire de l'amplificateur de servomoteur. Pour ces raisons, des travaux d'entretien sur les parties électriques de l'amplificateur ou sur le moteur ne doivent être réalisés qu'après avoir coupé l'alimentation électrique du système d'entrainement.*

The safety function „Safe Torque Off, STO“ is implemented together with the standard functionality of the ECOVARIO® 214/414 with only a few components related exclusively to the safety function.

The STO function meets the requirements to SIL2 or PLd respectively according to EN 61800-5-2 or EN ISO 13849-1.

The function is established by means of the circuitry shown in Fig. 6.24. The signals are lead to the connector X8. Further, the signals Enable and Ready of connector X1 are used.

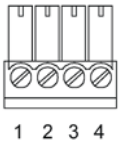

Fig. 6.23: Mating connector X8: (ECOVARIO® 214/414 only) MC 1,5/4-ST-3,81 18 03 59 4 Phoenix

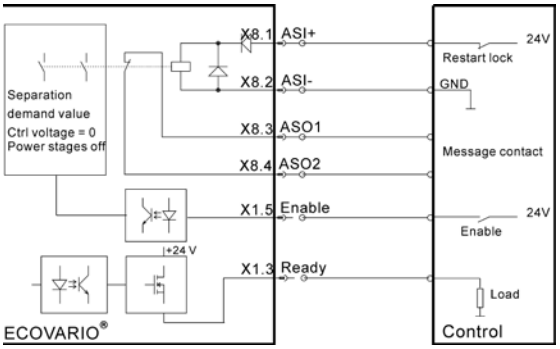

Table 6.11: Pin assignment connector X8

Signal	Pin	Description
ASI+	1	Safety relay choke +
ASI-	2	Safety relay choke -
ASO1	3	Message contact AS
ASO2	4	Message contact AS

Table 6.11a: Signals used for STO on connector X1

Signal	Pin	Description
Ready	3	Ready for operation
Enable	5	Enable operation

Using restart lock

To prevent the drive from starting indeliberately the use of mechanical safety components like circuit breakers or relays with positively-opening is essential.

So far these requirements were met by the following measures:

- Switching-off the main system by the main switch. Disadvantage: The DC link has to be recharged after restarting. The consequence is erosion of the contacts by switching under load.
- Seperating the motor from the servo amplifier by a safety switch or switch with contactor. Disadvantage: Erosion of contacts by switching under load, additional extend of wiring and components.

The restart lock function of the ECOVARIO® avoids these disadvantages.

The internal safety relay has positively-openings that safely switch off the power stages of the servo amplifier and zeroes the demand values. A free contact can be integrated in the external safety circuit.
Advantage: The DC link rests charged. Only low voltages are switched, the extend of wiring and components is reduced.

Implementation of the STO function
A block diagram of the components which contribute to the STO function is shown in Fig. 6.25.

Channel A:
A safety relay with positively-opening is switched on by a 24 V signal between the connectors ASI+ and ASI- and the servo amplifier operates normally. If the voltage at the inputs decreases, the STO function becomes effective by switching off the 15V voltage of the power stage. A restart is only possible if a 24 V voltage is applied again between the connectors ASI+ and ASI and the error status has been reset.

The safe status of the restart lock (channel A) is signalled by the contact ASO1/ASO2 (If the drive is blocked the contact is closed).

Channel B:
If the 24 V voltage is not applied to the Enable input, the power stage is switched off via an optocoupler and a CPLD. A restart is only possible if a 24 V voltage is applied again to the Enable input and the error status of the servo amplifier has been reset. The safe status of the restart lockout (channel B) is signalled via the Ready output (if the restart lockout is active, the level at the Ready output is 0 V).

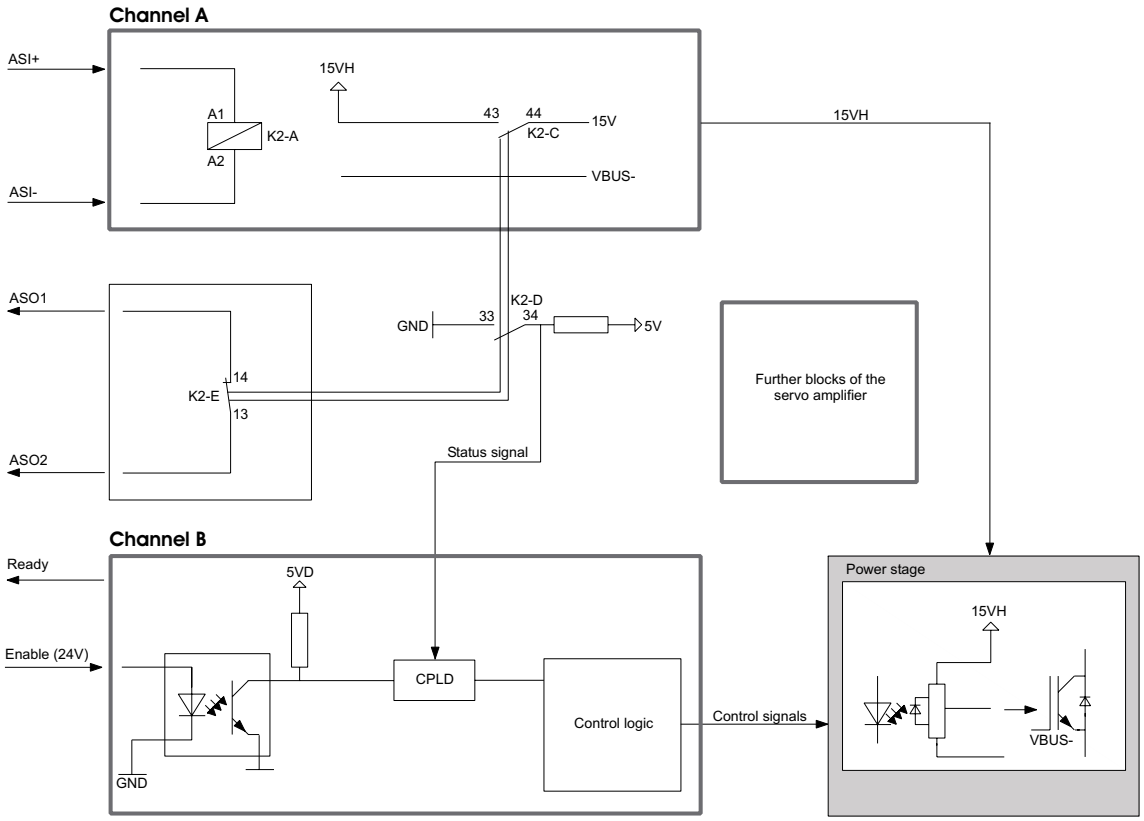

Fig. 6.25: Block diagram: Implementation of the safety function STO

Function of the three contact sets in channel A:

- In safe status the contact K2-C disables the power stage control by switching off the gate supply.
- The contact K2-D signals the status of the safety relay to the internal control of the ECOVARIO®.
- The contact K2-E signals the drive's status to the higher-level safety control of the plant. It can be used for enabling a door lock or similarly.

WARNING / *AVERTISSEMENT*	The STO function may only be activated by an automatic control or by manual activation if the motor is no longer rotating and the servo amplifer has been switched to „inactive" (24 V are not applied to „Enable" input). Drives with a suspended load must have an additional safe mechanical blocking. In the safety circuit the monitoring contact ASO1/ASO2 bridges the safety equipment of the machine (e.g. safety position switches at safety doors). The safety area is protected from indeliberate restart of the device.	*La fonction STO ne doit être activée manuellement ou de façon pilotée qu'après l'arrêt du freinage et que le frein d'arrêt a pris, que l'amplificateur de servomoteur soit devenu inactif (signal „Enable" retiré). Le contact de surveillance ASO1/ASO2 ponté dans le circuit de sécurité de l'installation des équipements de sécurité (par exemple des contacteurs de sécurité sur des portes). La zone de sécurité est maintenant protégée contre le redémarrage de l'entrainement*

Relevant aspects of safety

See also the prescribed use of the servo amplifier ECOVARIO® described in chap. 2.6 and the operating conditions mentioned there.

As Fig. 6.25 shows the STO function is implemented by two channels. If a single error occurs, the function still remains operative via the other channel.
If the restart lock is active, all driver transistors are in high resistance state. If a current in the motor is produced by damaged driver transistors the high-pole servo motors as well as the 2-phase servo motors cannot start because the necessary rotating field is not created. In the worst case, however, a short hitch can occur at the motor shaft (movement of max. 1/2 pole pair of the motor).
If the safety relay is damaged or a cable broken the safety equipment switches off the drive because in this case the bridging of the safety equipment is not effective.
If the restart lock is activated by an automatic control, the control signal must be monitored to make sure that the restart lock cannot be activated if the motor is rotating.

Commissioning and checking the STO function

During commissioning of the machine, after changing components or restructurating the wiring the function of the safety equipment including the STO function must always be checked as described in table 6.12. This check is also necessary after modifications of the parameters of after a download of a new firmware. If none of the mentoined cases applies, the function of the safety equipment has to be checked at least once a year.

Table 6.12: Checking the functions of the safety equipment

Step	Measure	Check
1	Make sure that during the check the drive can run and stop unrestrictedly	
2	Stop drive controlled (target velocity=0)	
3	Disable drive (remove Enable signal)	Measure the signal level at the Ready signal: has to be inactive (0 V).
4	Activate the holding brake, if any	
5	Remove the +24 V voltage between ASI+ and ASI-, i.e. activate the restart lock	
6	Open safety equipment (e.g. safety door) without interfering with the safety area.	Line contactor must stay „on".
7	Pull off mating connector X8 from the respective servo amplifier.	Line contactor must drop.
8	Plug in mating connector X8. Switch on line contactor.	

Provided that the checks are carried out regularly as described above, the example circuit below meets the requirements of performance level d according to EN ISO 13849-1.

Example of application

The example in fig. 6.26 shows a plant with 4 drives with common power supply. Each two drives form one group. The groups ordered in seperate areas with own safety equipment each.

The groups can be blocked against indeliberate starting via S1 and S2.

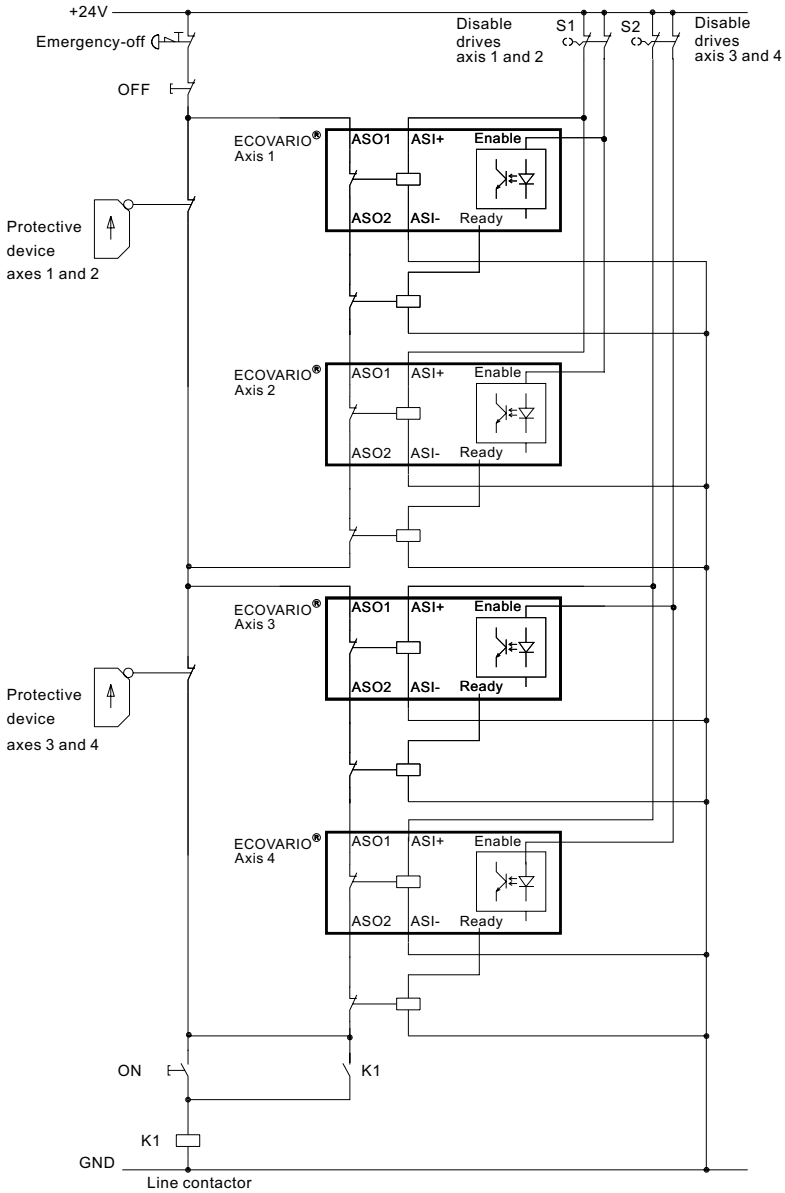

Fig. 6.26: Example for STO function

Maintenance, trouble shooting and diagnosis

The STO function and the STO interface do not require any maintencance.
A check concerning the proper operation of the STO function according to table 6.12 has to be carried out as described in the section „Commissioning and checking the STO function“ on page 41.
The following error messages are related to the STO function (list of all errors in Chap. 7.3.2):

D00	Restart lock blocks switch on	Measure: Check STO function
D01	No external Enable	Measure: Check Enable signal

Technical Data

Table 6.13: Technical data with respect to the safety standards

EN 61800-5-2		EN ISO 13849-1	
SIL	2	PL	d
PFH [1/h]	1,26 E-09	MTTFd	932 years
PFD	1,01 E-04	DC_{avg}	98,48%
		λ_d	$8{,}29 \cdot 10^{-8}$

Table 6.14: Technical data STO safety relay

according to EN ISO 13849-1 und EN 61800-5-2	
Ladder diagram lines	1
Switching voltage (applied externally)	24 V
Switching current (applied externally)	20 mA
Maximum propagation delay time between the contacts	11 ms

6.4.1.2 ECOVARIO 114

The versions ECOVARIO® x14 xR-xx-xxx xxx of the servo amplifiers ECOVARIO® 114 contain the safety function „Safe Torque Off“ (STO) according to EN 61800-5-2 und EN ISO 13849-1: 2006. The function also conforms to an uncontrolled stop according to category 0 of IEC 60204-1.The safety function is used to prevent the drive from starting indeliberately.

WARNING / AVERTISSEMENT	The „Safe Torque Off“ function does not switch off the power supply of the DC link voltage of the servo amplifier. Thus, maintenance of electrical parts of the motor or the servo amplifer may only be carried out after the drive system has been disconnected from the power supply.	*La fonction „Safe Torque Off“ ne coupe pas la tension du circuit intermédiaire de l'amplificateur de servomoteur. Pour ces raisons, des travaux d'entretien sur les parties électriques de l'amplificateur ou sur le moteur ne doivent être réalisés qu'après avoir coupé l'alimentation électrique du système d'entrainement.*

The safety function „Safe Torque Off, STO“ is implemented together with the standard functionality of the ECOVARIO® 114 with only a few components related exclusively to the safety function.

The STO function meets the requirements to SIL2 or PLd respectively according to EN 61800-5-2 or EN ISO 13849-1.

The function is established by means of the circuitry shown in Fig. 6.27. The signals are lead to the connector X2. Further, the signals Enable and Ready of connector X1 are used.

Table 6.15: Pin assignment connector X2

Signal	Pin	Description
ASI	4	Input contact STO function
ASO2	7	Message contact STO func.
ASO2	8	Message contact STO func.

Table 6.16: Signals used for STO on connector X1

Signal	Pin	Description
Ready	3	Ready for operation
Enable	5	Enable operation

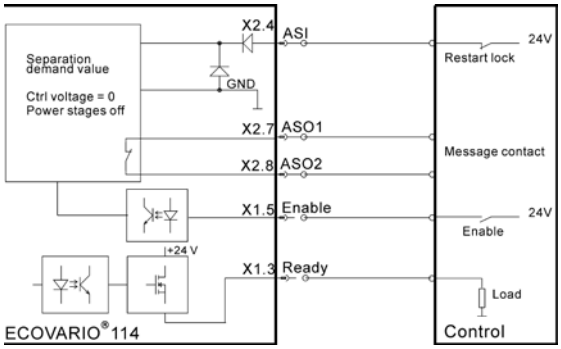

Fig. 6.27: Circuit of the STO function (ECOVARIO® 114xR)

Using the STO function

The internal control logic switches off the power stages of the servo amplifier and zeroes the demand values. The inputs and outputs can be connected to an external safety PLC.
Advantage: The DC link rests charged. Only low voltages are switched, the extend of wiring and components is reduced.

Implementation of the STO function

A block diagram of the components which contribute to the STO function (one axis) is shown in Fig. 6.28. The function is implemented in the same way for both axes.

Channel A:
If a voltage of +24 V is applied to the input ASI and to the Enable input (channel B) and software enable is set the servo amplifier operates normally. If the voltage at the ASI decreases, the STO function becomes effective by switching off the power stage. A restart is only possible if a 24 V voltage is applied again to the inputs ASI and Enable (channel B), software enable is set and the error status of the servo amplifier has been reset.

The safe status of the restart lock (channel A) is signalled by the contact between ASO1 and ASO2 (if the drive is blocked the contact is closed). The signal can be fed to a higher-level safety PLC and can e.g. be used for enabling a door lock.

Channel B:
If the 24 V voltage is not applied to the Enable input, the power stage is switched off. The STO function protects against a restart. A restart is only possible if a 24 V voltage is applied again to the inputs ASI and to the Enable input, software enable is set and the error status of the servo amplifier has been reset. The safe status of the restart lockout (channel B) is signalled via the Ready output (if the restart lockout is active, the level at the Ready output is 0 V).

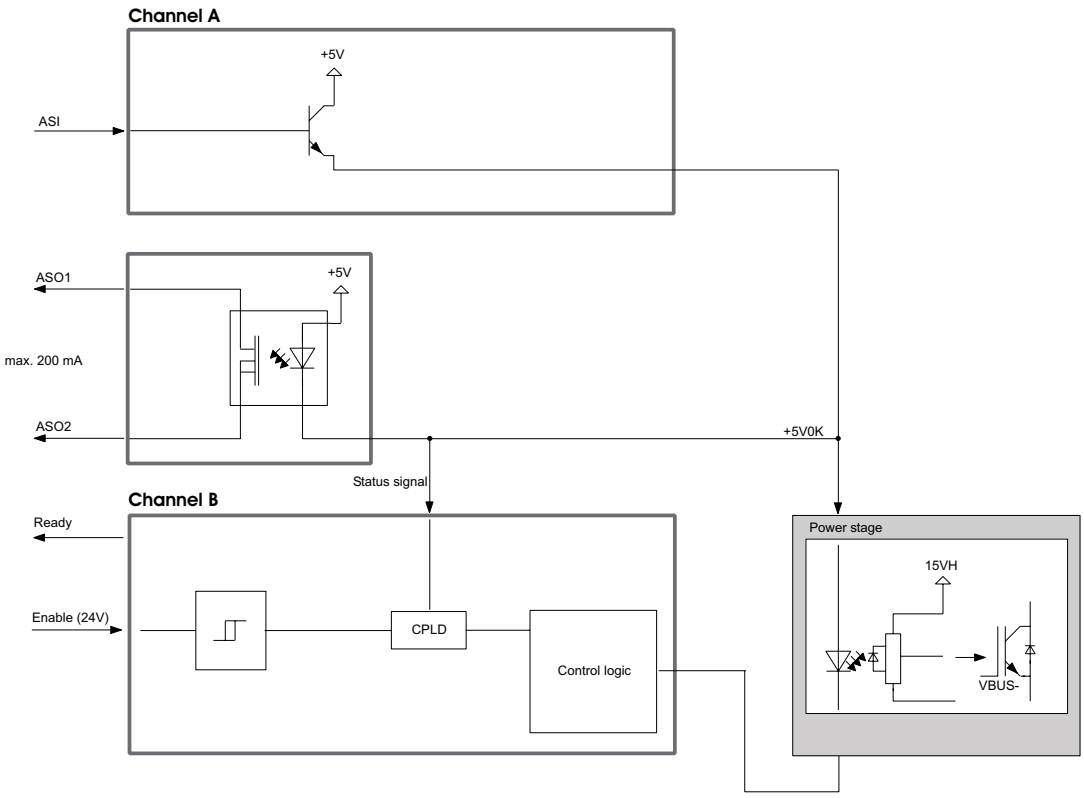

Fig. 6.28: Block diagram: Implementation of the safety function STO in ECOVARIO 114

WARNING / AVERTISSEMENT	The STO function may only be activated by an automatic control or by manual activation if the motor is no longer rotating and the servo amplifer has been switched to „inactive" (24 V are not applied to „Enable" input). Drives with a suspended load must have an additional safe mechanical blocking. Via the safety PLC the monitoring contact ASO1/ASO2 bridges the safety equipment of the machine (e.g. safety position switches at safety doors). The safety area is now protected from indeliberate restart of the device.	*La fonction STO ne doit être activée manuellement ou de façon pilotée en retirant la tension entre les entrées ASI+ et ASI- qu'après l'arrêt du freinage et que le frein d'arrêt a pris, que l'amplificateur de servomoteur soit devenu inactif (signal „Enable" retiré). Le contact de surveillance ASO1/ASO2 ponté dans le circuit de sécurité de l'installation des équipements de sécurité (par exemple des contacteurs de sécurité sur des portes). La zone de sécurité est maintenant protégée contre le redémarrage de l'entrainement*

Relevant aspects of safety

See also the prescribed use of the servo amplifier ECOVARIO® 114 described in chap. 2.6 and the operating conditions mentioned there.

As Fig. 6.28 shows the STO function is implemented by two channels. If a single error occurs, the function still remains operative via the other channel.
If the restart lock is active, all driver transistors are in high resistance state. If a current in the motor is produced by damaged driver transistors the high-pole servo motors as well as the 2-phase servo motors cannot start because the necessary rotating field is not created. In the worst case, however, a short hitch can occur at the motor shaft (movement of max. 1/2 pole pair of the motor).

If the internal semiconductor switch is damaged or a cable is broken the safety equipment switches off the drive because in this case the bridging of the safety equipment is not effective.
If the restart lock is activated by an automatic control, the control signal must be monitored to make sure that the restart lock cannot be activated if the motor is rotating.

Commissioning and checking the STO function

During commissioning of the machine, after changing components or restructuring the wiring the function of the safety equipment including the STO function must always be checked as described in the table below. This check is also necessary after modifications of the parameters of after a download of a new firmware. If none of the mentoined cases applies, the function of the safety equipment has to be checked at least once a year. Per axis proceed as follows:

Table 6.17: Checking the functions of the safety equipment

Step	Measure	Check
1	Make sure that during the check the drive can run and stop unrestrictedly	
2	Stop drive controlled (target velocity=0)	
3	Disable drive (remove Enable signal)	Measure the signal level at the Ready signal: has to be inactive (0 V).
4	Activate the holding brake, if any	
5	Remove the +24 V voltage at ASI, i.e. activate the restart lock	
6	Open safety equipment (e.g. safety door) without interfering with the safety area.	Line contactor must stay „on".
7	Pull off mating connector X2 from the respective servo amplifier.	Line contactor must drop.
8	Plug in mating connector X2. Switch on line contactor.	

Maintenance, trouble shooting and diagnosis

The STO function and the STO interface do not require any maintencance. However, periodical functional checks are necessary.
A check concerning the proper operation of the STO function according to table 6.17 has to be carried out:

- During commissioning of the machine
- after changing components
- after restructuring of the wiring
- after a download of a new Firmware
- after modifications of the parameters
- periodically at least once a year; the required intervals depend on the application

The following error messages are related to the STO function (list of all errors in Chap. 7.3.2):

D00	Restart lock blocks switch on	Measure: Check STO function
D01	No external Enable	Measure: Check Enable signal

Technical Data

Table 6.18: Technical data with respect to the safety standards

EN 61800-5-2	
SIL	2

EN ISO 13849-1	
PL	d
MTTFd	2639 years
DC_{avg}	By evaluation of the status signal up to 99% are possible

6.5 Encoders

The servo amplifier ECOVARIO® has two encoder inputs (X11 and X12).

NOTICE / *PRUDENCE*	**Never plug and pull encoder cables while they are live! Always switch off the logic supply of the ECOVARIO®. Otherwise damages to the encoder can occur.**	***Ne connectez ou ne déconnectez jamais le câble d'un codeur sous tension ! Toujours éteindre l'alimentation logique de l'ECOVARIO avant. Dans le cas contraire, le codeur pourrait être endommagé***

Encoder input X11
Incremental standard encoders with rectangular signals or with 1 Vss sine-signals can be connected to the 9-pole Sub-D socket Encoder A.

Encoder input X12
Apart from the standard encoders also sine-cosine encoders with 1-Vss sine signals and absolute value encoders system HIPERFACE® and BISS® can be connected to the 15-pole Sub-D socket Encoder B.

Parametrization of the encoder interfaces
For all encoders of the Jenaer Antriebstechnik GmbH complete data sets are available. With the PC software ECO Studio the data set for the selected encoder can be chosen and transmitted to the ECOVARIO®.

6.5.1 X11: Encoder A

The supply voltage U_P of the encoder A is 5 V. The maximum cable length is 50 m. The maximum signal frequency is 2 MHz, that is a count rate of 8 MHz.

Table 6.19: Pin assignment connector X11

Signal	Pin	Description
$+V_{ENC}$	1	5 V (0.2 A)
A	2	Track A
B	3	Track B
N	4	Track N
T+	5	Temperature sensor
D_{GND}	6	Encoder ground
/A	7	Track /A
/B	8	Track /B
/N	9	Track /N

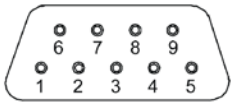

Mating connector X11: 9-pole Sub-D connector
view of the solder or crimp side

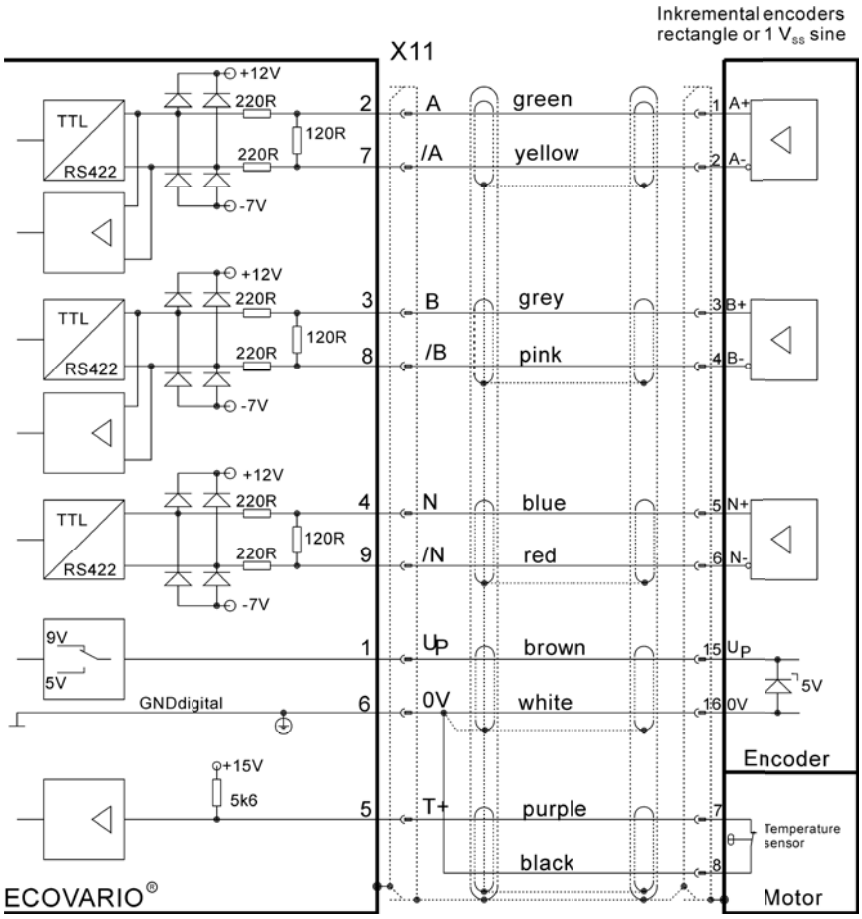

Fig. 6.29: Example for connection for 5 V incremental encoder with standard cable INK65-491-525-xxx

6.5.2 X12: Encoder B

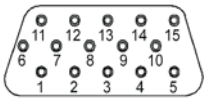

Fig. 6.30: Mating connector X12: 15-pole Sub-D high density connector, view of the solder or crimp side

Table 6.20: Pin assignments connector X12

	Standard encoder / SINCOS encoder		HIPERFACE® (Stegmann SCS)		BISS® (Hengstler)	
Pin	Signal	Description	Signal	Description	Signal	Description
1	U_P	5 – 14 V/2 W can be parametrized via ext. R	U_P	5 – 14 V/2 W can be parametrized via ext. R	U_P	5 – 14 V/2 W can be parametrized via ext. R
2	A	Track A / Sine	Sine	Sine	n.c.	
3	B	Track B /Cosine	Cosine	Cosine	n.c.	
4	N	Track N	Data	Data channel	Data	Data
5	T+	Temperature sensor	T+	Temperature sensor	T+	Temperature sensor
6	DGND	Ground	DGND	Ground	DGND	Ground
7	/A	Track /A / /Sine	RefSin	- Sine	n.c.	
8	/B	Track /B / /Cosine	RefCos	- Cosine	n.c.	
9	/N	Track /N	/Data	/Data channel	/Data	/Data
10	T-	Temperature sensor	T-	Temperature sensor	T-	Temperature sensor
11	S-	Sensor DGND	S-	Sensor DGND	S-	Sensor DGND
12	S+	Sensor U_P	S+	Sensor U_P	S+	Sensor U_P
13						
14					CLK	CLK
15					/CLK	/CLK

Setting the supply voltage

The voltage U_P is set via the relation between the resistors R1 and R2:

$$U_P = 5\ V\ ((R1/R2) + 1) \qquad (3)$$

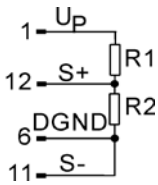

Fig. 6.31: Supply voltage

The resistor values should lie in the range of 4.7 kΩ to 47 kΩ. The standard cable ABS 65-300-525-xx for BISS® encoders already contains the settings for the voltage U_P, the maximum length of the cable is 50 m.

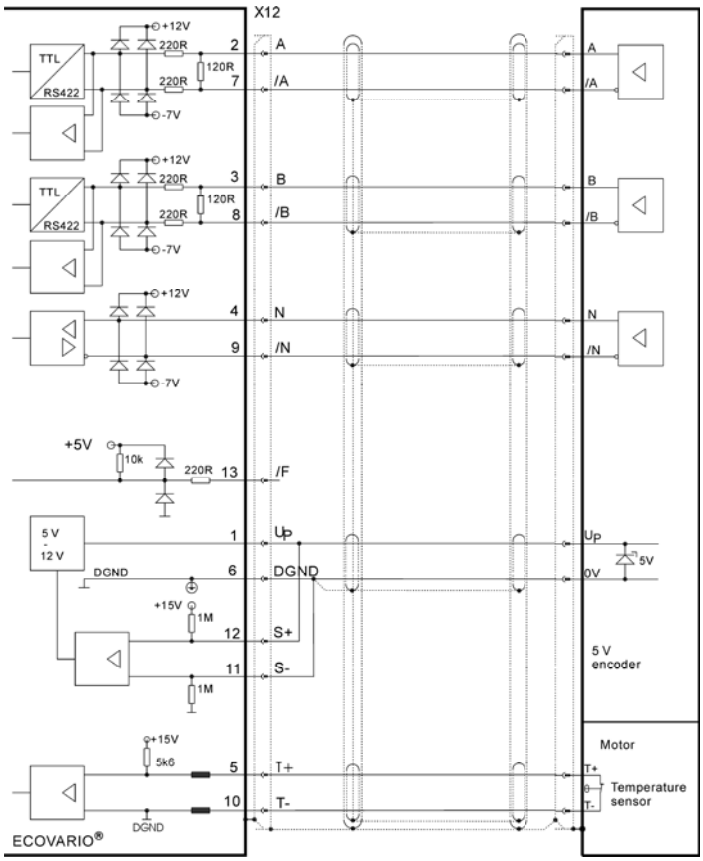

Fig. 6.32: Example for connection for a 5 V incremental encoder

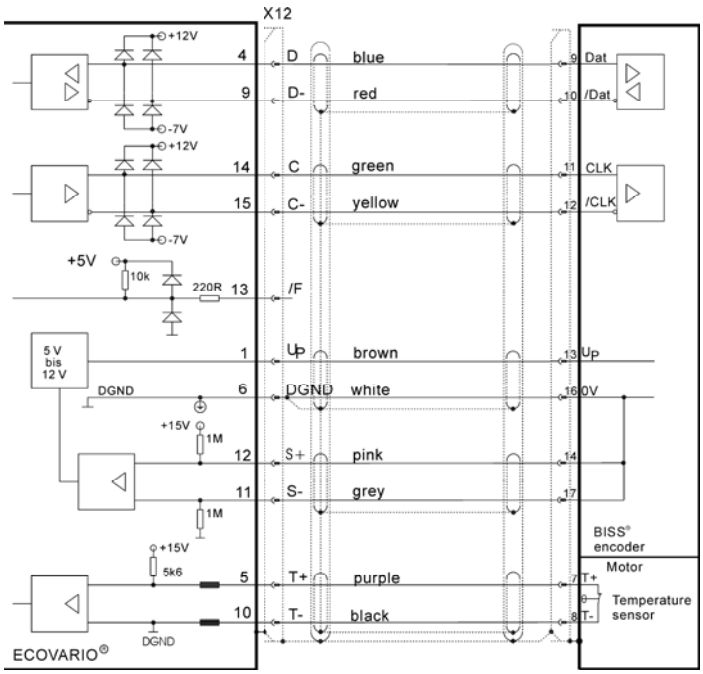

Fig. 6.33: Example for a BISS® encoder via standard cable ABS65-300-525-xx

6.6 Serial interfaces

6.6.1 X13: RS485/RS232 interface (at ECOVARIO® 214/414 with 2 capture inputs)

The ECOVARIO® is available with RS485 or RS232 interface, at ECOVARIO® 214/414 each with two capture inputs for rapid event capture.
ECOVARIO® x xx x x-A x-xxx xxx: design with RS485 interface
ECOVARIO® x xx x x-F x-xxx xxx: design with RS485 interface
ECOVARIO® x xx x x-B x-xxx xxx: design with RS232 interface
ECOVARIO® x xx x x-G x-xxx xxx: design with RS232 interface

Design with RS485 interface

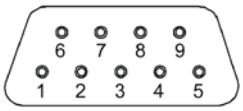

Fig. 6.34: Mating connector X13: 9-pole Sub-D connector; view of the solder or crimp side

Table 6.21: Pin assignment connector X13

Pin	Signal	Description
1	CAP1+	Capture input1 (RS422 level)*
2	Rx+	Receive RS485
3	Tx+	Transmit RS485
4	CAP2+	Capture input2 (RS422 level)*
5	DGND	Digital ground
6	CAP1-	Capture input1 (RS422 level)*
7	Rx-	Receive RS485
8	Tx-	Transmit RS485
9	CAP2-	Capture input2 (RS422 level)*

*) Capture inputs at ECOVARIO® 214/414 only

Apart from the serial interface the connector X13 provides at ECOVARIO® 214/414 additionally two capture inputs with RS422 signal transmission for rapid capture of process events. The capture inputs are not galvanically separated and can also be configured as digital inputs.
The RS485 interface of the ECOVARIO® may as well serve for a 4-conductor (full duplex) as also a 2-conductor (half duplex) connector. Transmitter and receiver of the ECOVARIO® meet the specifications of EIA-RS485 (up to 250 kBaud) and are EMC-protected according to IEC 61 000-4-4.
The communication protocol allows network operation with a master (host) and up to 126 ECOVARIO® units as slaves in an RS485 network. At most 32 participants may take part in one network. The network must have a bus structure.
The adress (ID) of an ECOVARIO® is set by the front keys. Each ID may only be allocated once. ID = 0 is reserved and may not be allocated.

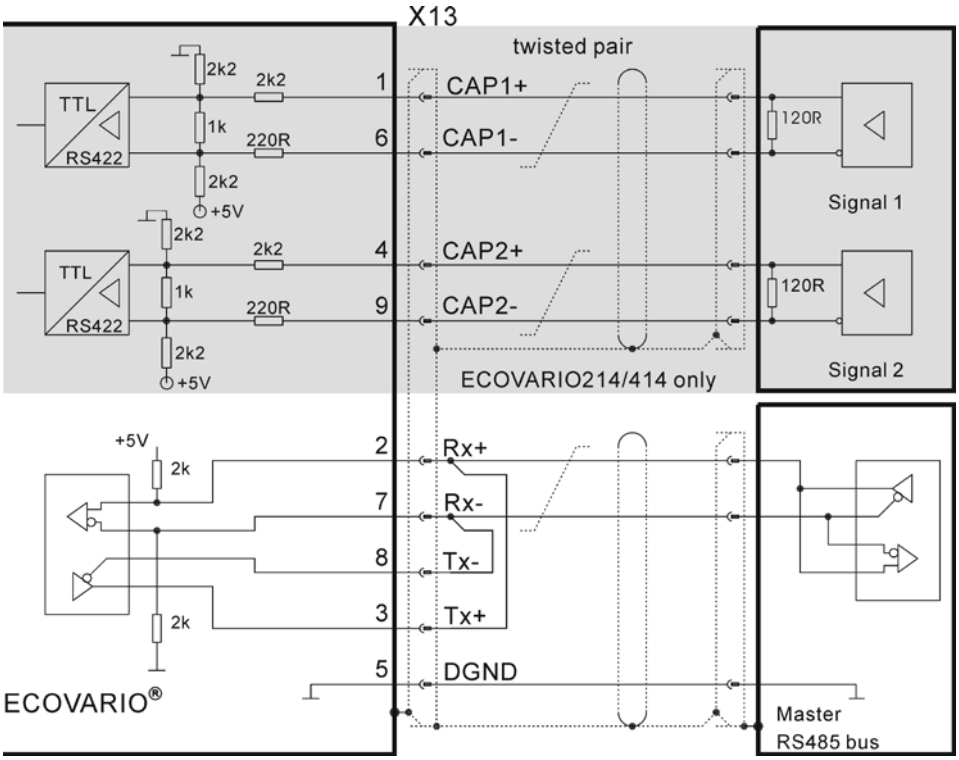

Fig. 6.35: Example for connection RS485: point-to-point connection in half duplex mode

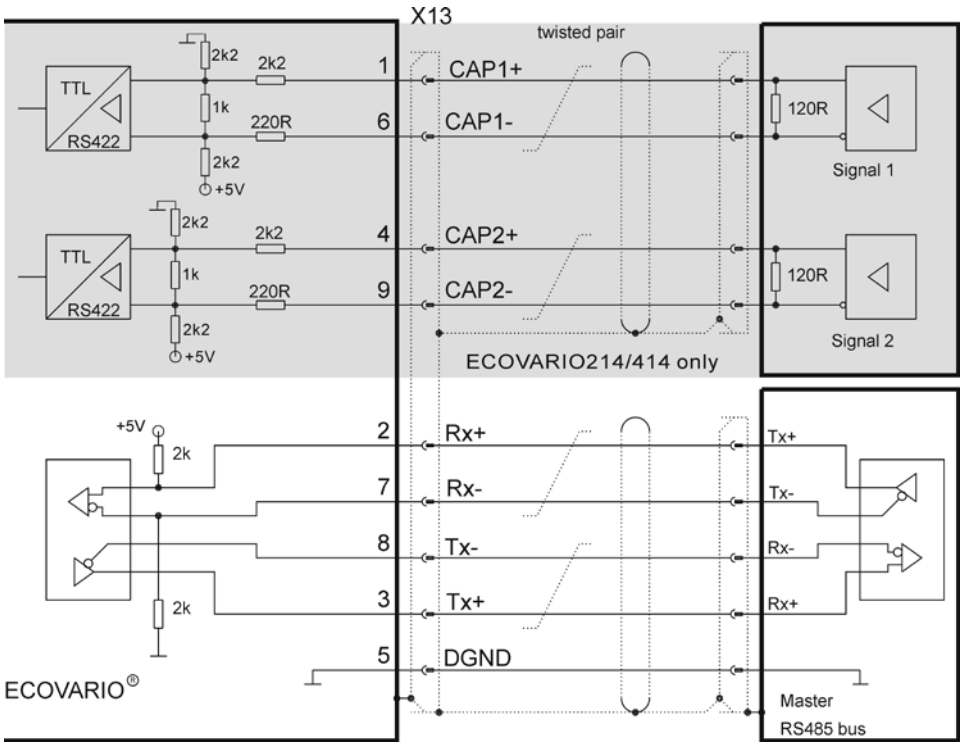

Fig. 6.36: Example for connection RS485: point-to-point connection in full duplex mode

Design with RS232 interface

Apart from the serial interface the connector X13 of the ECOVARIO® 214/414 provides two capture inputs with RS422 signal transmission for rapid event capture.

Alternatively to the USB interface, via the RS232 interface a PC can be connected for setting the parameter of the ECOVARIO®. How to set the parameters of the RS232 interface is described in the manual „Object Dictionary ECOVARIO® and ECOSTEP®.

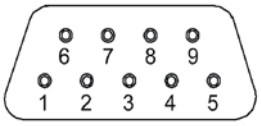

Fig. 6.37: Mating connector X13: 9-pole Sub-D connector, view of the solder or crimp side

For RS232 communication with ECOVARIO® a 3-core connection to the host is needed. The connector X13 of the ECOVARIO® is designed in a way that a 1:1 standard cable for communication with a COM port (9-pole Sub-D connector) can be used. Transmitter and receiver of the ECOVARIO® meet the specifications of EIA-232E and CCITT V.28 and are EMC-protected according to IEC 61000-4-2.

The communication protocol allows network operation of up to 126 ECOVARIO® units as slaves in a mono master network. For this option a ring structure of the RS232 network according to the scheme in fig. 6.39 is necessary.

Table 6.22: Pin assignment connector X13 in RS232 design

Pin	Signal	Description
1	CAP1+	Capture level1 (RS422 level)*
2	TxD	RS232 TxD
3	RxD	RS232 RxD
4	CAP2+	Capture input2 (RS422 level)*
5	DGND	Digital ground
6	CAP1-	Capture input1 (RS422 level)*
7	n.c.	free
8	n.c.	free
9	CAP2-	Capture input2 (RS422 level)*

*) Capture inputs at ECOVARIO® 214/414 only

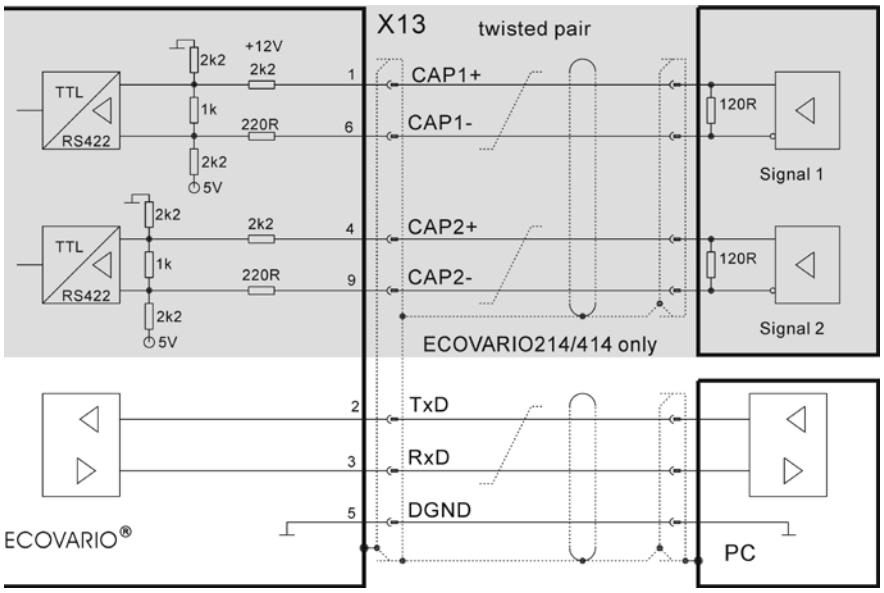

Fig. 6.38: Example for connection of an RS232 interface

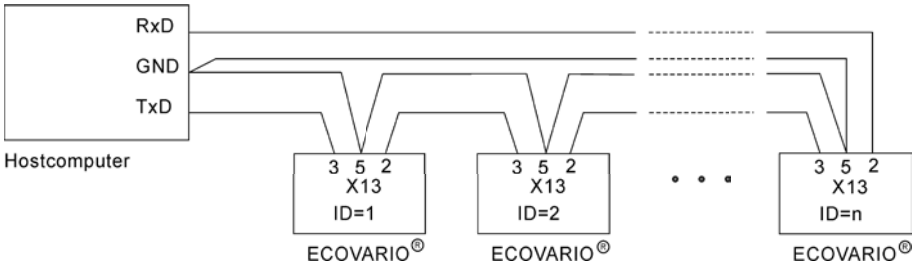

Fig. 6.39: RS232 network in ring structure

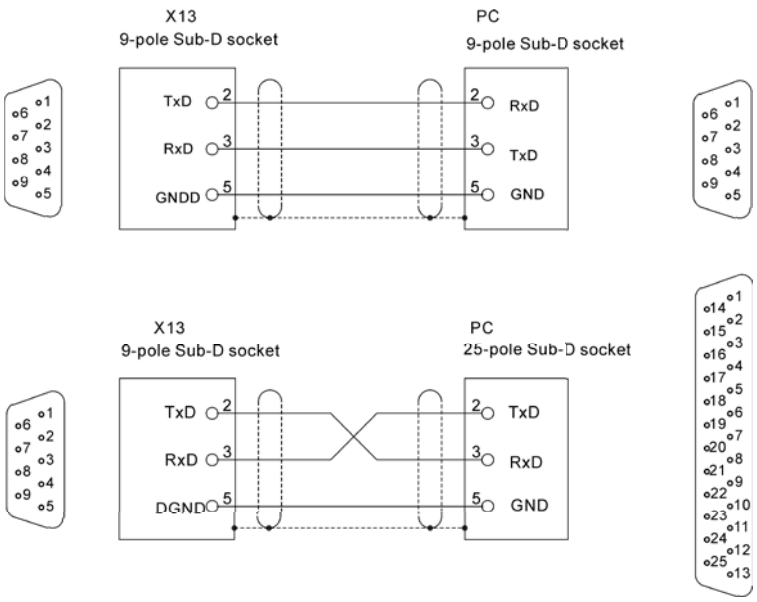

Fig. 6.40: RS232 cable ECOVARIO® – PC; view of the solder or crimp side of the plug connectors at the cable

6.6.2 X14: Parameterizing USB interface

The USB interface serves for setting the parameters of the ECOVARIO® with a PC. a USB cable A – B connects the USB interface of the ECOVARIO® (USB connector type B) to a PC (USB connector type A).
The USB interface is EMC protected according to IEC 61 000-4-2 and is internally supplied. To communicate via the USB interface firstly the unit ID of the ECOVARIO® must be set. The ID is set with the front keys of the ECOVARIO®. Each ID can only be allocated once. ID = 0 is reserved and may not be allocated.

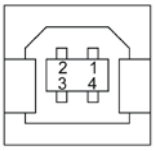

Fig. 6.41: Connector X14: USB connector type B: front view onto the socket at the ECOVARIO®

Table 6.23: Pin assignment connector X14

Pin	Signal	Description
1	USB_VBUS	USB_+5V
2	USB_D-	USB data-
3	USB_D+	USB data+
4	USB_GND	USB ground

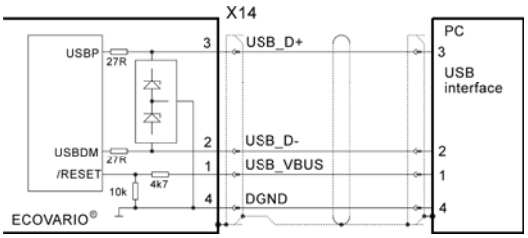

Fig. 6.42: Circuit of the USB interface

6.7 X21: CAN interface

The CAN interface of the ECOVARIO® is based on the communication profile CiA DS 301 and the device profile CiA DSP 402 (drives and motion control). It must be supplied with external voltage. (exception: for ECOVARIO xxx xx Ax xxx and ECOVARIO xxx xx Bx xxx xxx, which have been delivered from November 2014 on, an external supply is not required. A voltage which might be present at pin 9 will be ignored.)
Terminating resistors for busses are not built in the ECOVARIO®. A CAN bus has to be terminated with a 120 Ω resistor at the beginning and at the end. If the ECOVARIO® is operated as first or last participant at a CAN bus, it is useful to solder the terminating resistor in the mating connector of X21 between the pins 2 and 7.

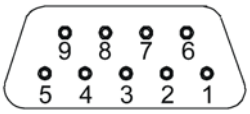

Fig. 6.43: Mating connector X21: 9-pole Sub-D socket; view of the solder or crimp side

The manual „Object Dictionary ECOVARIO® and ECOSTEP®“ contains a detailed description of all available functions.

The Baud rate und the device ID can be set with the front keys of the device (see chap. 7.3.3 „Key operation“) or directly via the appropriate CAN objects.

The following Baud rates are supported: 1 000 kBit/s, 500 kBit/s, 250 kBit/s, 125 kBit/s, 100 kBit/s, 50 kBit/s. These values accord to the register values of the common older 8 or 16 bit CAN controller (ECOSTEP® compatible) and are transformed via table into ECOVARIO® CAN controller values. If point of sampling and scan rate (86.7 %, 3-times sampling at all Baud rates) do not meet the demands please get in touch with the technical service of Jenaer Antriebstechnik.

Table 6.24: Pin assignment connector X21

Pin	Signal	Description
1	-	n.c.
2	CAN_L	CAN data L
3	CAN_GND	reference potential to CAN data
4	-	n.c.
5	-	n.c.
6	CAN_GND	reference potential to CAN_V+
7	CAN_H	CAN data H
8	-	n.c.
9	CAN_V+	+8 ... +18 V_{DC}, max. 50 mA *

***) Note:**
For ECOVARIO 214 xx **A**x xxx xxx,
ECOVARIO 214 xx **B**x xxx xxx,
ECOVARIO 414 xx **A**x xxx xxx and
ECOVARIO 414 xx **B**x xxx xxx
from revision AS08 on
and ECOVARIO 114 Rx **A**x xxx xxx and
ECOVARIO 114 Rx **B**x xxx xxx
from revision AS04 on
no external supply voltage for the CAN interface is required.
The revision (AS) can be seen from the serial number (6th and 7th position).

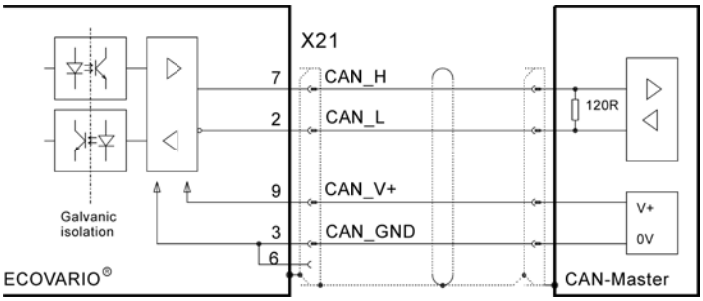

Fig. 6.44: Circuit X21, design with CAN interface

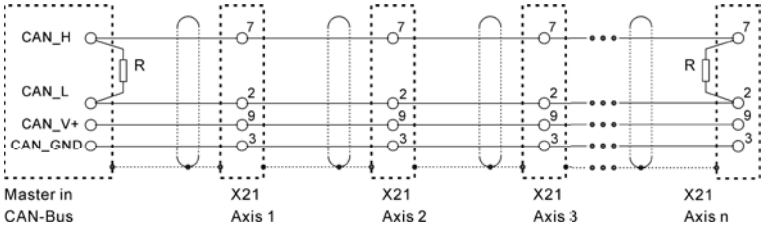

Fig: 6.45: size terminating resistors R acc. to line impedance; normal: R = 120 Ω

6.8 Optional interfaces

ECOVARIO® is available with the following options:

ECOVARIO® x xx xx-A x-xxx xxx: CAN + RS485 + encoder emulation
ECOVARIO® x xx xx-B x-xxx xxx: CAN + RS232 + encoder emulation
ECOVARIO® x xx xx-F x-xxx xxx: CAN + RS485 + PROFIBUS DP-V0
ECOVARIO® x xx xx-G x-xxx xxx: CAN + RS232 + PROFIBUS DP-V0
ECOVARIO® x xx xx-L x-xxx xxx: CAN + RS232 + Ethernet interface
ECOVARIO® x xx xx-P x-xxx xxx: CAN + RS485 + EtherCAT® interface
ECOVARIO® x xx xx-Q x-xxx xxx: CAN + RS232 + EtherCAT® interface

6.8.1 X22: Designs with encoder emulation

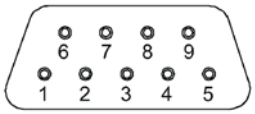

Fig. 6.46: Mating connector X22: 9-pole Sub-D connector; view of the solder or crimp side

The interface „encoder emulation“ is supplied by an external voltage of 5 V_{DC}.
The maximum cable length is 10 m.

Table 6.25: Pin assignment connector X22; design with encoder emulation

Pin	Signal	Description
1	ENC_5V	Power supply (external)
2	A	Track A
3	B	Track B
4	Z	Track N
5	ENC_GND	Encoder ground
6	ENC_GND	Encoder ground
7	/A	Track /A
8	/B	Track /B
9	/Z	Track /N

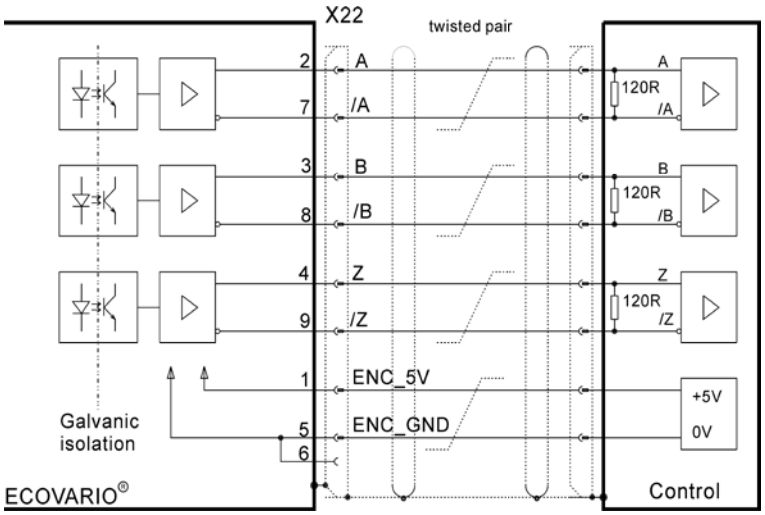

Fig. 6.47: Connector assignment X22 on designs with encoder emulation

6.8.2 X22: Designs with PROFIBUS DP-V0 interface

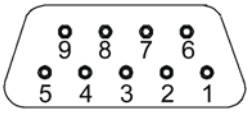

Fig. 6.48: Mating connector X22: 9-pole Sub-D socket; view of the solder or crimp side

Table 6.26: Pin assignment connector X22 on design with PROFIBUS DP-V0 interface

Pin	Signal	Description
1	-	n.c.
2	-	n.c.
3	RxD/TxD+	PB data
4	CNTR-P	PB control
5	PB_GND	PB ground
6	PB_5V	PB 5 V
7	-	n.c.
8	RxD/TxD-	PB /Data
9	-	n.c.

The pin assignment of the design with PROFIBUS DP-V0 meets the requirements of EN 50 170.
Additionally to the signals RxD/TxD+, RxD/TxD-, PB_GND and PB_5V the optional signal CNTR (RTS, control of the forward direction of the data) is supported. This signal can be used for controlling a repeater or an fibre optic link converter (OLP, Optical Link Plug).
The bus interface of the ECOVARIO® is electrically seperated from the rest of the device. But the reference potentials are interconnected via 1 MΩ and 100 nF. The interface is supplied by the unit, an external supply in not necessary.
The shroud of the Sub-D connector is connected to chassis earth (GND).
All units are connected in a bus structure (line). In one segment up to 32 participants (master or slaves) can be connected. Each segment has an active bus terminating module at the beginning and at the end (cf. Fig. 6.49).
To obtain faultless operation it has to be made sure that both bus terminating modules are continuously supplied. The bus terminating module is commonly realized in the bus connectors to be switched in. If there are more than 32 participants or for enlarging the network repeaters have to be used to connect the bus segments to each other.
Use only cable with a mesh shield. If the unit is mounted it is an advantage if the cable is stripped without interruption and laid on the shield or PE conductor. This measure increases the reliability in ambients with strong interferences.

For newly installed PROFIBUS DP-V0 cablings we recommend standardized cable type A with the following characteristics:

Wave resistance:	135 – 165 Ω
Capacitance per unit length:	< 30 pF/m
Loop resistance:	110 Ω/km
Core diametre:	0,64 mm
Core cross section:	> 0,34 mm²

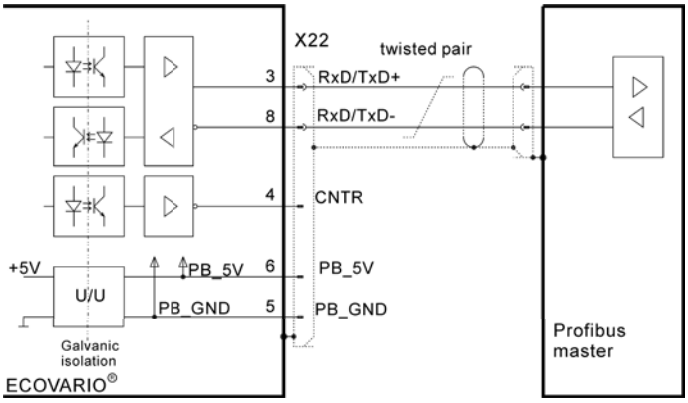

Fig. 6.49: Circuit X22 on design with PROFIBUS DP-V0

The maximum cable length depends on the transmission rate. E. g. with a transmission rate of 187.5 kBit/s the maximum cable length is 1 200 m, at 12 MBit/s the cable should not be longer than 100 m.
At transmission rates ≥1.5 MBit/s spur lines must be avoided. Common connectors provide the possibility to connect incoming and outgoing cables directly in the connector. Thus spur lines are avoided and the bus connector can be plugged in and off the bus without interrupting the data transmission.

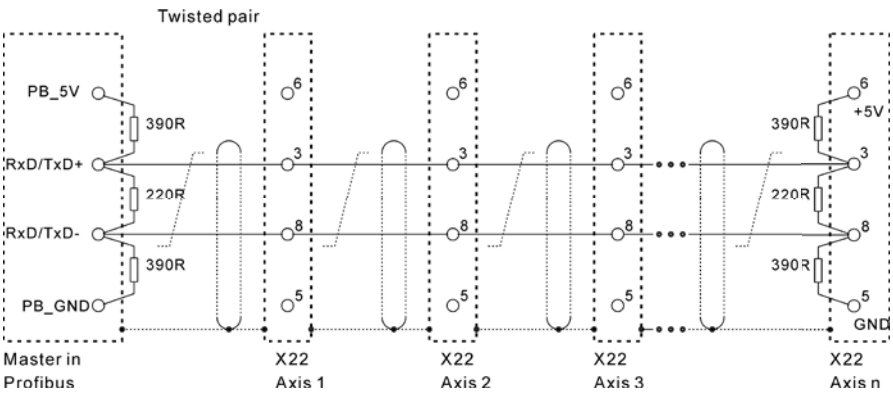

Fig. 6.50: PROFIBUS connection of several ECOVARIO®s

Use only bus connectors suitable for PROFIBUS DP-V0 and the respective baud rate. The connectors at both ends should provide a termination to be switched in. Additionally in each connector should be a longitudinal inductance with 100 nH for each outgoing data conductor. These connectors are available from Siemens for example.
The shield of the PROFIBUS DP-V0 cable may not be used for potential compensation. Machines that are grounded at various spots must have a separate PE conductor the impedance of which is at least 10 times smaller than the one of the cable shields.

6.8.3 X22: Designs with Ethernet interface

As an option, ECOVARIO® can be equipped with an Ethernet interface which can be used for parameterization. The interface supports Fast Ethernet according to IEEE-802.3u (100Base-TX), halfduplex, 100Mbps. Physically, the interface is designed as two standardized RJ45-sockets at the front side of the ECOVARIO®.

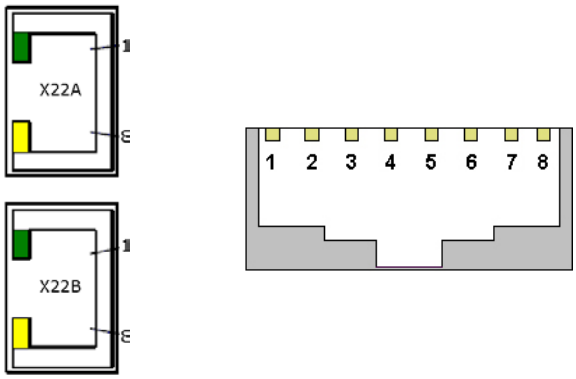

Table 6.27: Pin assignment connector X22A,B on design with Ethernet interface

Pin	Signal	Description
1	RX+	Receive signal +
2	RX-	Receive signal -
3	TX+	Transmit signal +
4	-	n.c.
5	-	n.c.
6	TX-	Transmit signal -
7	-	n.c.
8	-	n.c.

The interfaces X22A and X22B can each be used for the connection to the PC or a server (end of a star-shaped connection) as well as for the connection to further servo amplifiers via a line-shaped connection (uplink, cf. examples below).

Cabling is done via twisted-pair-cables UTP, Cat.5e. Star and line topologies are supported. Not more than 6 ECOVARIO® servo amplifiers should be cabled in line. The cable length between two devices is limited to 100 m.

For using the Ethernet interface the IP address, the subnet mask, the port and, if necessary, a gateway IP address have to be parameterized. The gateway IP address is only necessary if a communication to external network is intended to be set up.

The interfaces X22A and X22B are each equipped with the following display elements:

- green LED displays „Link Activity“
- orange LED displays „Collision Detection“.

An ECOVARIO® which is operated with the Ethernet interface automatically selects the interface used for message transfer. If a CAN bus connection is available, all messages which the ECOVARIO® intends to transmit, e.g. PDOs, emergencies or the boot-up message are sent on the CAN bus. If no CAN bus voltage can be detected it is assumed that a pure Ethernet application is set up and all messages are sent via Ethernet (if no Ethernet cable is plugged, the messages are lost!). CAN bus has the highest priority, i.e. the messages are transmitted via CAN bus as soon as the CAN connector has been plugged. Ethernet messages are not sent until 5s after power-up, because the hardware requires this time for configuration. During this time up to 8 (via DPM) or up to 32 (via CAN-Bus) received messages are stored temporarily.

There are three ways to implement the operation with Ethernet interface:

- as a CAN/Ethernet bridge, where one ECOVARIO® with Ethernet interface serves as a gateway
- as a pure Ethernet application, where all ECOVARIOs® are connected to each other by Ethernet interfaces
- as a version with parallel bus operation.

The three ways are described in the following.

Gateway operation
In the most common application an ECOVARIO® with Ethernet interface serves as a bus coupler between Ethernet and an existent CAN bus system. Fig. 6.51 shows the resulting topology. In any case the CANopen protocol is used which is „tunneled“ in UDP packages for the transport via Ethernet. The original CAN data is extracted from these packages and is lead to the CAN bus. All bus nodes (also the ECOVARIO® with Ethernet interface) can receive them. In the other direction all CAN messages received via the bus are packed into UDP packages and sent via the Ethernet.

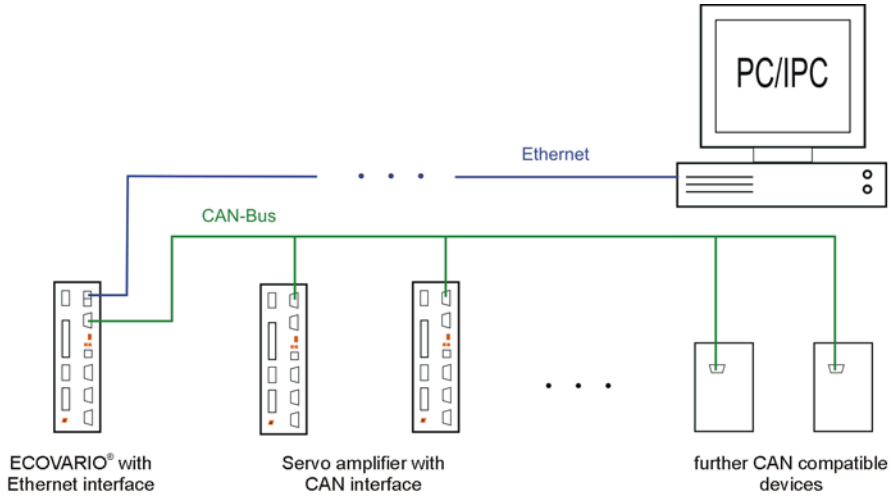

Fig. 6.51: Gateway operation of the ECOVARIO®

The Ethernet function supports full SDO transfer with one or more client applications on PC/IPC side. Therefore, the SDO answers received on the CAN bus are switched through to the respective service (automatic assignment of IP address and port). All other received messages as PDOs and emergencies etc. are sent to an address which has to be defined in the configuration object. For example, this could be the IP address of the PC/IPC or the IP broadcast address (255.255.255.255). The port is freely selectable, however should be adjusted to a respective application on the PC (e.g. for logging).

Ethernet operation

For this version CAN bus wiring is not required at all (cf. Fig. 6.52). The communication is handled exclusively via Ethernet. All CANopen messages and services (PDO, Emergency, NMT etc.) are managed.

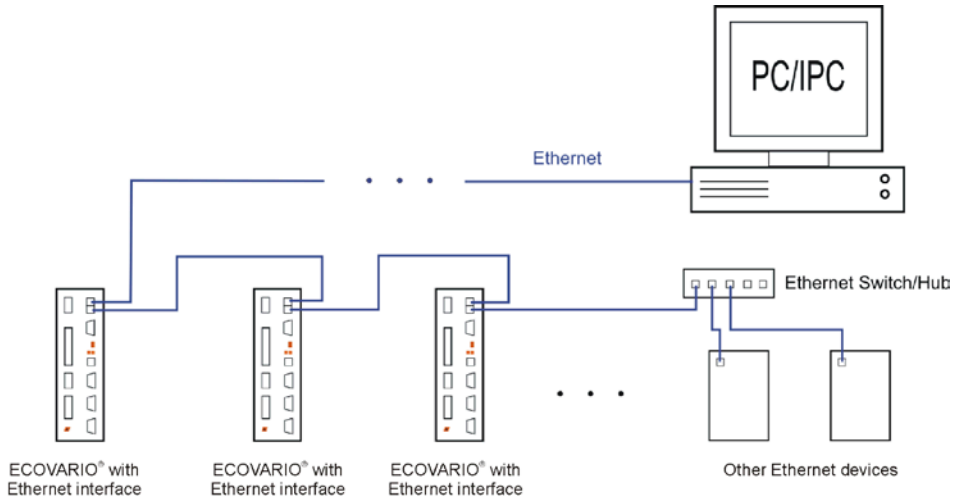

Fig. 6.52: Ethernet operation of ECOVARIO® without using the CAN bus

Redundant operation

The special feature of this version (Fig. 6.53) is that e.g. service data (via SDO) can be exchanged via Ethernet while process communication is done via the CAN bus. The SDO transfer with the PC/IPC does not reach the CAN bus which is not disturbed (e.g. synchronous motion). In order to change the operation mode the gateway mode has to be deactivated in each device (object 0x2FB2, sub index 12), because otherwise the devices would send the messages to each other continuously. Process data communication is decoupled completely from the Ethernet in this case. All other CANopen messages and services (PDO, Emergency, NMT etc.) are not switched through from the CAN bus to the Ethernet side (and vice versa).

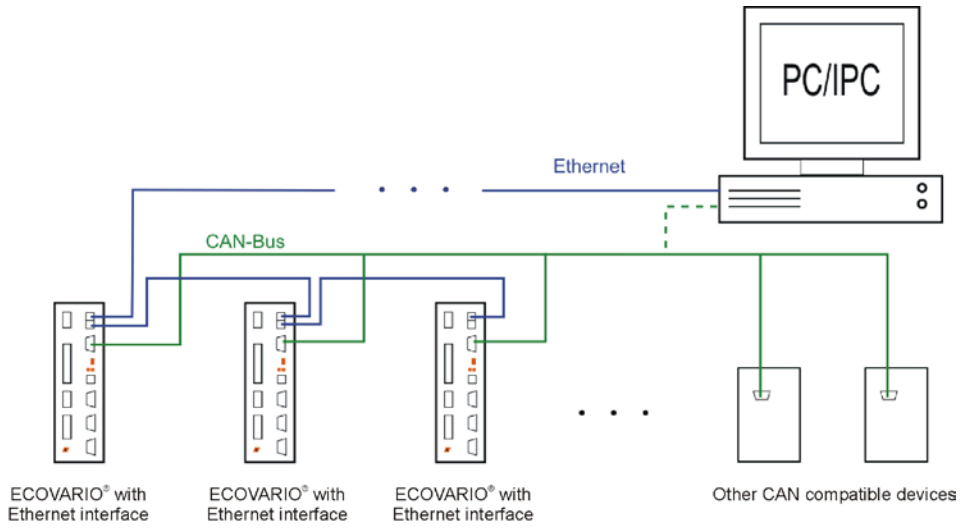

Fig. 6.53: Redundant operation Ethernet/CAN with ECOVARIO®

6.8.4 X22: Designs with EtherCAT® interface

As an option, ECOVARIO® can be equipped with an EtherCAT® interface which can be used for setpoint setting and parameterization. The interface supports the protocol of the EtherCAT® Technology Group and allows for Fast Ethernet according to IEEE-802.3u (100Base-TX), fullduplex, 100Mbps. Physically, the interface is designed as two standardized RJ45-sockets at the front side of the ECOVARIO®. Pin assignment is the same as for the standard Ethernet interface (c.f. Chap. 6.8.3).

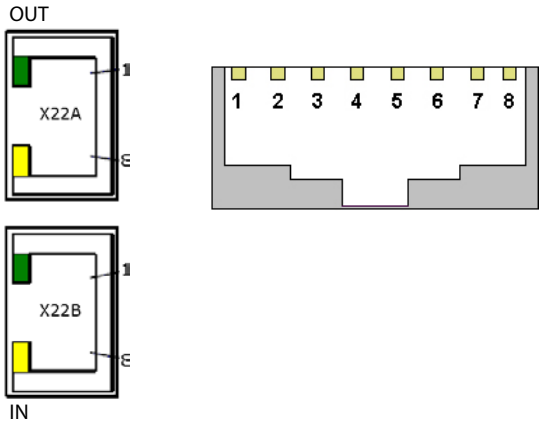

Table 6.28: Pin assignment connector X22A,B on design with EtherCAT® interface

Pin	Signal	Description
1	RX+	Receive signal +
2	RX-	Receive signal -
3	TX+	Transmit signal +
4	-	n.c.
5	-	n.c.
6	TX-	Transmit signal -
7	-	n.c.
8	-	n.c.

The interface X22B is the EtherCAT® „IN“ port and is used for the connection to the PC or a server (end of a star-shaped connection).

The interface X22A is the EtherCAT® „OUT“ port and is intended for the connection to further servo amplifiers via a line-shaped connection (uplink, cf. examples below).

Cabling is done via twisted-pair-cables UTP, Cat.5e. Tree and line topologies are supported. Star topologies are possible as well. The cable length between two devices is limited to 100 m.

For process control and visualization of EtherCAT® devices the operation with the PC software „TwinCAT“ (manufacturer: Beckhoff GmbH) is proposed. For configuration instructions and an application example please refer to Application Note 26.

The objects which are required for the configuration of the EtherCAT® communication are described in the manual „Object Dictionary ECOVARIO, ECOSTEP, ECOMPACT, chapter 5.2.29.

The interfaces X22A and X22B are each equipped with the following display elements:

- green LED displays „Link / Activity“
- orange LED displays „Transmission in fullduplex mode“.

The green „RUN“ LED is located in the housing of the ECOVARIO and can be seen through the air slots on the upper side of the housing. The LED has the following functions:

- LED off: EtherCAT® State Init
- LED flashes (5 Hz): EtherCAT® State Pre-Operational
- LED flashes (200ms on/1s off): EtherCAT® State Safe Operational
- LED on: EtherCAT® State Operational

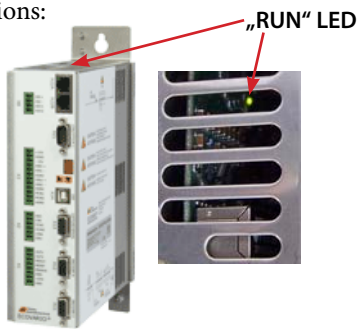

There are two ways to implement the operation with EtherCAT® interface:

- as a pure EtherCAT® application, where all ECOVARIOs® are connected to each other by EtherCAT® interfaces
- as a version with parallel bus operation EtherCAT® / CAN.

The two ways are described in the following.

Pure EtherCAT® operation
For this version no CAN bus wiring is required (cf. Fig. 6.54). The communication is handled exclusively via EtherCAT®. All CANopen messages and services (PDO, Emergency, NMT etc.) are managed.

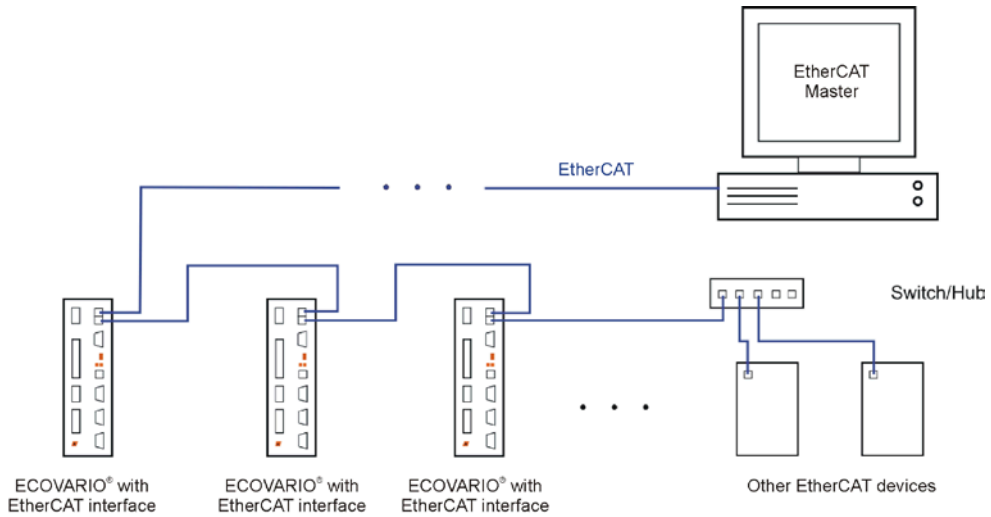

Fig. 6.54: EtherCAT® operation of ECOVARIO® without using the CAN bus

Parallel operation
In principle, CAN and EtherCAT® can be operated in parallel (cf. Fig. 6.55) where the CAN bus is used for parameterization while EtherCAT® is used for the synchronous (interpolated) operation. As soon as the ECOVARIO® has been configurated successfully by the EtherCAT master and has been set to preoperational state via EtherCAT, the NMT telegrams via CAN are ignored. PDOs assigned to the EtherCAT bus are no longer sent nor received via CAN. Interpolated operation via CAN is not possible in this case. Emergency telegrams are sent via both bus systems. SDO traffic is functional without limitations via all interfaces.

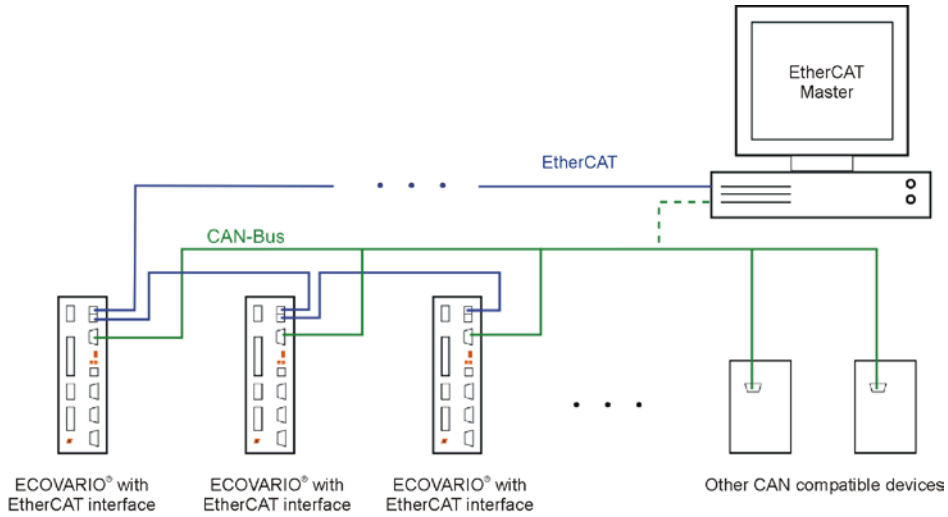

Fig. 6.55: Parallel operation EtherCAT®/CAN with ECOVARIO®

7 Commissioning

7.1 Notes before commissioning

Only qualified personnel with a broad knowlege of the fields of electrical engineering, automation and drives are allowed to commission the servo amplifier ECOVARIO®. If required, Jenaer Antriebstechnik GmbH offers trainings.

The manufacturer of the machine must generate a hazard analysis for the machine and take appropriate measures to ensure that unforeseen movements cannot cause injury or damage to any person or property.

Check the wiring for completeness, short circuits and ground fault.

WARNING / *AVERTISSEMENT*	**The protective earth conductor has to be properly applied before applying a voltage.** If the protective earth conductor is not connected, in case of a failure e.g. the housing of the servo amplifier can be at hazardous voltage level.	***Un raccordement à la terre réglementaire doit obligatoirement être raccordé avant la mise sous tension de l'appareil.*** *Si cette mise à la terre n'est pas raccordée, le boitier de l'amplificateur de servomoteur peut, en cas de problèmes, mener de dangereuses tensions.*
WARNING / *AVERTISSEMENT*	**Never plug or pull electrical connections while they are live! There is a risk of arcing. Arcs can cause injury and damage contacts.** During operation logic and power connectors are live.	***Ne pas effectuer de débranchements sous tension. Il y a danger d'arc électrique qui peut blesser des personnes et endommager des contacts.*** *Pendant l'utilisation les conducteurs de pilotage et de puissance conduisent des tensions dangereuses.*
WARNING / *AVERTISSEMENT*	**Acute danger of life or risk of injury due to high voltages up to 400 V! All live parts must be protected safely against touching.** Even up to six minutes after disonnection from the supply capacitors can still have dangerous voltages present. To be sure measure the DC link circuit and wait till it has fallen below 40 V.	***Danger de mort ou danger de blessures par des tensions élevées (400 V)! Ne touchez pas de pièces de l'amplificateur de servomoteurs qui peuvent être potentiellement conducteur de tension (par exemple des contacts).*** *Attendez au moins 6 minutes. Les condensateurs peuvent rester chargés aussi longtemps de tension dangereuse. Mesurez par sécurité les tensions entre circuits jusqu'à qu'elles soient inférieurs à 40V.*

If there are several axes in one machine commission one axis after the other. The axes already commisioned should be switched off.

For commissioning of the safety function STO observe chap. 6.4.1.

CAUTION / *ATTENTION*	**Hot surfaces may cause burns to the skin.** As the housing of the ECOVARIO serves also as heat sink during operation the surface temperature may rise to more than 70°C. Before touching these parts after switching off the unit wait until the temperature has fallen down to 40 °C.	***Des surfaces chaudes peuvent entrainer des brulures.*** *Le boiter de l'ECOVARIO sert également de radiateur, ceci entraine qu'il peut atteindre des températures de plus de 70°C pendant l'utilisation. Avant de toucher ces pièces, vous devez attendre après l'arrêt jusqu'à ce que la température de surface tombe à environ 40 ° C.*

7.2 Control and display elements

At the front side of the ECOVARIO® one 7 segment LED display and two keys are located.

The display shows state and error messages. If the state or error message has more than one digit the digits are shown one after another in intervals of 0.5 s.

By pressing the S1 key the current CAN baud rate is shown, by pressing the S2 key the unit ID according to the bootloader program is shown. The letters are displayed only once, afterwards reappears the display value.

In bootloader mode the following setting can be made with the keys:

- Unit ID (Node-ID) in a CAN, USB, RS232, RS485 or PROFIBUS network
- Baud rate for the CAN network
- Display of the errors in the error store
- Restarting the bootloader and the loadware

7.3 Work schedule commissioning

1. Check installation
The servo amplifier is disconnected from the supply. Check the wiring for completeness, short circuits and ground faults.

2. Zero enable
Connect signal input ENABLE with 0 V at the connector X1.

3. Switch on 24 V supply
Apply the 24 V control voltage at the connector X1 between the pins GND and +24 V; after an initializing phase of about 3 s the LED display shows the operation mode of the servo amplifier.

4. Rectify eventual errors
If the display shows an error, the error has to be rectified before commissioning.

5. Start setup software
Connect a PC to one of the PC interfaces of the ECOVARIO® and start the commissioning and operation program ECO Studio. Here, establish the logic connection between PC and ECOVARIO®.

6. Device configuration and mechanical configuration

NOTICE / *PRUDENCE*	**Incorrect parameter settings can cause damage or destruction of machine parts.** Device configuration and mechanical configuration must be adjusted to each specific case.	***De mauvais paramétrage peuvent endommager ou détruire des paries de la machine.*** *Les appareils et la configuration mécanique doivent être individuellement adaptés à chaque cas.*

With the help of the ECO Studio device configuration wizard and of the mechanical configuration wizard carry out the basic settings for the operation of ECOVARIO®. A detailed description of software commissioning can be found in the „ECO Studio Operation Manual ECOVARIO®, ECOSTEP® and ECOMPACT®“ and in the ECO Studio help system.
Before switching on the power supply the following items 7 to 10 have to be observed.

7. Check safety equipment

DANGER	**High voltages up to 400 V and unintentional movements of motors, tools or axes may lead to death or serious injuries.** Before switching on the voltage it is vital to check if all safety equipment that protects from touching live parts and from the consequences of indeliberate movements functions properly.	***Des tensions pouvant atteindre 400 V et des mouvements involontaires du moteur, des outils ou des déplacements d'axes entraines des dangers de mort ou de blessures.*** *Avant la mise sous tension de la partie puissance, il s'assurer que les parties pouvant conduire du courant et les conséquences de de mouvements involontaires soient sécurisées et fonctionnent correctement.*

8. Zero demand values
Before switching on the power supply the analog and digital demand values for position and speed should be zeroed.

9. Switch on power supply
The power supply should only be switched on with the on/off switches of a contactor circuit.

10. ENABLE
0,5 s after switching on the power supply, the enable signal can be changed to „high“ (24 V level at input X1: ENABLE). If the motor vibrates or hums the value of the p-gain should be reduced (ECO Studio: in the navigation area select the „Controller“ entry and then the „Velocity Controller“ tab).

11. Parameter optimization, further programming

NOTICE / *PRUDENCE*	**Incorrect parameter settings can cause damage or destruction of machine parts.** The controller parameters are pre-set by the manufacturer. However, they must be checked and if necessary adjusted to the specific application. A detailed description of how to set the velocity controller and position controller parameters can be found in the ECO Studio help system.	***De mauvais paramétrage peuvent endommager ou détruire des paries de la machine.*** *Les paramètres du régulateur sont préréglés en usine, cependant, doivent être vérifiées et adaptées à chaque cas spécifique. Une description détaillée de la configuration des paramètres du régulateur de vitesse et de position, est donnée le système d'aide ECO-Studio.*

7.3.1 State display

If the display shows an „L“ a short time period after power-up, the unit is in its main mode.

Afterwards the word „Eco“ followed by the type key (114, 214 or 414) is shown once.

No parameters available
Display shows Uc. If no communication or control parameters are available or if these are invalid, the unit is in the state „not configurated“. After setting or storing the unit must be restarted.

Operation
Display shows 0. Inactive state (power stage switched off) display „0“, point blinking.
Display shows 8. Active state (power stage switched on) display „8“, point blinking.
By pressing the S1 key the current CAN baud rate is shown, by pressing the S2 key the unit ID according to the bootloader program is shown. The letters are displayed only once, afterwards reappears the display value.

Blocking
Display shows 8 . Servo amplifier active, reached positive limit switch
Display shows 8 . Servo amplifier active, reached negative limit switch
Display shows 8 . Servo amplifier active, reached both limit switches

Save parameters
During saving parameters in the EEPROM the display shows a „P“. Afterwards the prior value is displayed.

Error display
If the loadware recognizes an error, this is displayed. In bootloader mode the error display is interrupted by pressing a key, afterwards errors can be shown with the display of the error memory (see fig 7.1 „Work schedule key operation“). It is always the last error, that is displayed. If the error on the display is deleted (if possible) the next error on the list is displayed.

7.3.2 Error messages

If the loadware recognizes an error, it is displayed. In bootloader mode the error display can be interrupted by pressing a key, afterwards errors can be shown with the display of the error memory (see fig 7.1 „Work schedule key operation“). It is always the last error that is displayed.

Table 7.1: Error messages

Code	Error	Countermeasure
Group A General errors		
A00	Incorrect checksum of a bootloader section or overall checksum	Repeat action, if the error reoccurs, send in device to manufacturer
A01	Error during deleting a flash section	Repeat action, if the error reoccurs, send in device to manufacturer
A02	Error during activating the flash memory	If the error reoccurs, send in device to manufacturer
A03	Error during programming the flash memory	Repeat action, if the error reoccurs, send in device to manufacturer
A04	Error during adressing the flash memory	Repeat action, if the error reoccurs, send in device to manufacturer
A10	Error during reading/writing the EEPROM	If the error reoccurs send in the device to manufacturer
A11	Incorrect checksum of an EEPROM section	Communication and/or application parameters have not (yet) been stored. This behaviour is normal with new devices and has been implemented for signalling this to the user.
A12	RAM test error	If the error reoccurs send in the device to manufacturer
A20	Incorrect calibration data	Send in device to manufacturer
A21	Watchdog error of standard loadware	If the error reoccurs send in the device to manufacturer
A22	PLD firmware unsuitable for loadware	Send in device to manufacturer
A23	Loadware does not support this unit	Contact service hotline of Jenaer Antriebstechnik GmbH
A30	Runtime error in DPO18 FPGA	Contact service hotline of Jenaer Antriebstechnik GmbH
A51	Undefined external interrupt	Contact service hotline of Jenaer Antriebstechnik GmbH
A52	Undefined Assembler command	Contact service hotline of Jenaer Antriebstechnik GmbH
Group B Bus errors		
B00	CAN Nodeguarding error. No messages are sent. Synchronisation window in interpolated mode exceeded.	Check bus connection and device function, check supply voltage of the CAN bus
B01	CAN bus parameters not available, incorrect saving of parameters. No messages are sent	Enter parameters again, check node ID and Baud rate
Group D Device and axis errors		
D00	Restart lock blocks switch on	Check function of the restart lock
D01	No external enable	Check ENABLE signal
D02	Heat sink temperature >85 °C	Switch off unit and let it cool down. Check whether the device is mounted in the correct mounting position. Make sure that no heat accumulation can occur in the cabinet.
D03	Device temperature >60 °C	
D04	Temperature error motor (encoder input A (X11))	Let motor cool down. Check temperature sensor connectors.
D05	Temperature error motor (encoder input B (X12))	Let motor cool down. Check temperature sensor connectors.
D06	Negative limit reached	Reset if an error message is raised
D07	Positive limit reached	Reset if an error message is raised
D10	Short circuit of motor phases or ground fault of the power stage resp.	Check motor and supply cables. Check whether the shield wires are connected correctly.
D11	Overvoltage in the supply cables	

Code	Error	Countermeasure
D12	Exceeding $i^2 x t$ limitation of device	Check parameters and operating conditions. Check if axis is freely movable.
D13	Exceeding $i^2 x t$ limitation of motor	
D14	ADC reference measurement failed	If error reoccurs send in device to manufacturer
D15	Undervoltage threshold for safe stop reached (e.g. mains failure). Behaviour acc. to opcode in the object 0x2701, sub index 20. Threshold value can be set in sub index 19.	Check power supply and connections. Check output power specification of power supply whether it is dimensioned sufficiently.
D20	External 24 V supply at X1 has fallen below 17 V	Check 24 V power supply. Are there disturbances on the supply line? Check output power specification of power supply whether it is dimensioned sufficiently.
D21	DC link voltage too high, short circuit of ballast circuit	Check DC link and ballast circuit. Is the ballast resistor connected correctly? Check supply voltage (might be too high).
D22	DC link voltage too low	Check power supply and connections. Check output power specification of power supply whether it is dimensioned sufficiently.
D23	Overload ballast circuit	Check dimensioning of ballast resistor. Is the ballast resistor connected correctly? Error cause might be a defective ballast resistor (high-resistance).
D24	Exceeding charging time of DC link	Check voltage
D25	Short circuit or overload of the digital outputs or the brake control resp.	Check READY, OUT1, OUT2 and brake. Check whether the shield wire of the motor cable is connected correctly.
D30	Following error too high	Check axis parameters and operating conditions. Check whether the axis is freely movable. Check whether the (second) position measuring system still counts correctly.
D31	Commutation not found	Check if axis is freely movable. Check whether the motor phases are connected correctly, whether the encoder counts and whether the commutation settings are correctly.
D32	Internal software reset	If error reoccurs send in device to manufacturer
D33	Error controller watchdog	If error reoccurs send in device to manufacturer
D34	Error supervision of external position measuring system	Check adjustment of the machine. If error reoccurs send in device to manufacturer.
D35	Gantry system only: Error of an axis in the gantry interconnection	
Group E	Encoder errors	
E00	1. Antivalence error of incremental encoder A 2. No encoder has been selected 3. Correction error of SINCOS encoder (R5.34 and higher up to R5.165) Error code is not supported for clock/direction encoders	Check encoder and supply cables for wire breakage. If no encoder is configurated, select encoder. Check whether the correct encoder port has been selected. In case of externally powered encoders check supply voltage.
E10	1. Antivalence error of incremental encoder B 2. Error at external encoder input 3. Signal error absolute value encoder 4. Correction error of SINCOS encoder (R5.34 and higher up to R5.165) Error code is not supported for clock/direction encoders	Check encoder and supply cables for wire breakage. Check whether the correct encoder port has been selected. In case of externally powered encoders check supply voltage.
E01	Capture error incremental encoder A	Check whether the monitoring is set correctly. Error reasons might also be disturbances on the lines or a defective encoder.
E11	Capture error incremental encoder B	
E02	Interpolation error SINCOS encoder A	Check encoder and supply cables. Error reason might be strong electromagnetic interferences.
E12	Interpolation error SINCOS encoder B	
E03	Too high speed of encoder A or cannot be read (supported for absolute value encoder from R5.5 on)	Check parameters (limit speed of the motor). Error reason might be contamination or damage of the measuring system

Code	Error	Countermeasure
E13	Too high speed of encoder B or cannot be read (supported for absolute value encoder from R5.5 on)	Check parameters (limit speed of the motor). Error reason might be contamination or damage of the measuring system
E05	Encoder error LNK measuring head	Check encoder and supply cables
E06	Encoder error LNK measuring head	Check encoder and supply cables
E14	Selected encoder type is wrong or not supported	Check configuration, enter appropriate encoder type
E15	Invalid motor data (not supported)	-
E16	Error during reading user data	Check encoder and supply cables and configuration, if the error reoccurs send in encoder
E17	Invalid user data or motor and servo amplifier do not fit	Error occurs upon initial commissioning of a new encoder because no user data has been stored yet in the encoder EEPROM. Writing to the object 0x607C „home_offset“ removes the error cause. User data is only stored in multiturn absolute value encoders.
E18	Mismatch between stored position value and actual encoder value (more than 1/2 revolution) (used in firmware version 5.164 and lower)	Carry out homing procedure.
E19	Incorrect multiturn value (used in firmware version 5.164 and lower)	Error cause is a contamination or a defect of the revolution counter of the multiturn absolute value encoder.
E20	Stored position value and actual position value of the technology function „Modulo positioning“ outside the tolerance window. Only use for motors with holding brake (all encoders)! (used in firmware version 5.164 and lower)	
E20	Mismatch between stored position value and actual encoder value (more than 1/2 revolution) (used in firmware version 5.165 and higher)	Carry out homing procedure.
E21	Incorrect multiturn value (used in firmware version 5.165 and higher)	Error cause is a contamination or a defect of the revolution counter of the multiturn absolute value encoder.
E22	Stored position value and actual position value of the technology function „Modulo positioning“ outside the tolerance window. Only use for motors with holding brake (all encoders)! (used in firmware version 5.165 and higher)	
E23	Quadrant correction error of SINCOS encoder A (used in firmware version 5.166 and higher)	Check encoder and supply cables for wire breakage. If no encoder is configured, select encoder. Check whether the correct encoder port has been selected. In case of externally powered encoders check supply voltage.
E24	Quadrant correction error of SINCOS encoder B (used in firmware version 5.166 and higher)	

7.3.3 Key operation

In bootloader mode settings can be made with the keys. The bootloader mode can be selected in three different ways:

- press both keys during switching on the 24 V control voltage
- if after switching on the 24 V control voltage an error is recognized
- by starting the bootloader mode with the commissioning tool from the PC

Functions of the keys:
Key S1 ▶: select, menu navigation, count up display values
Key S2 ▼: enter, select menu option, accept values

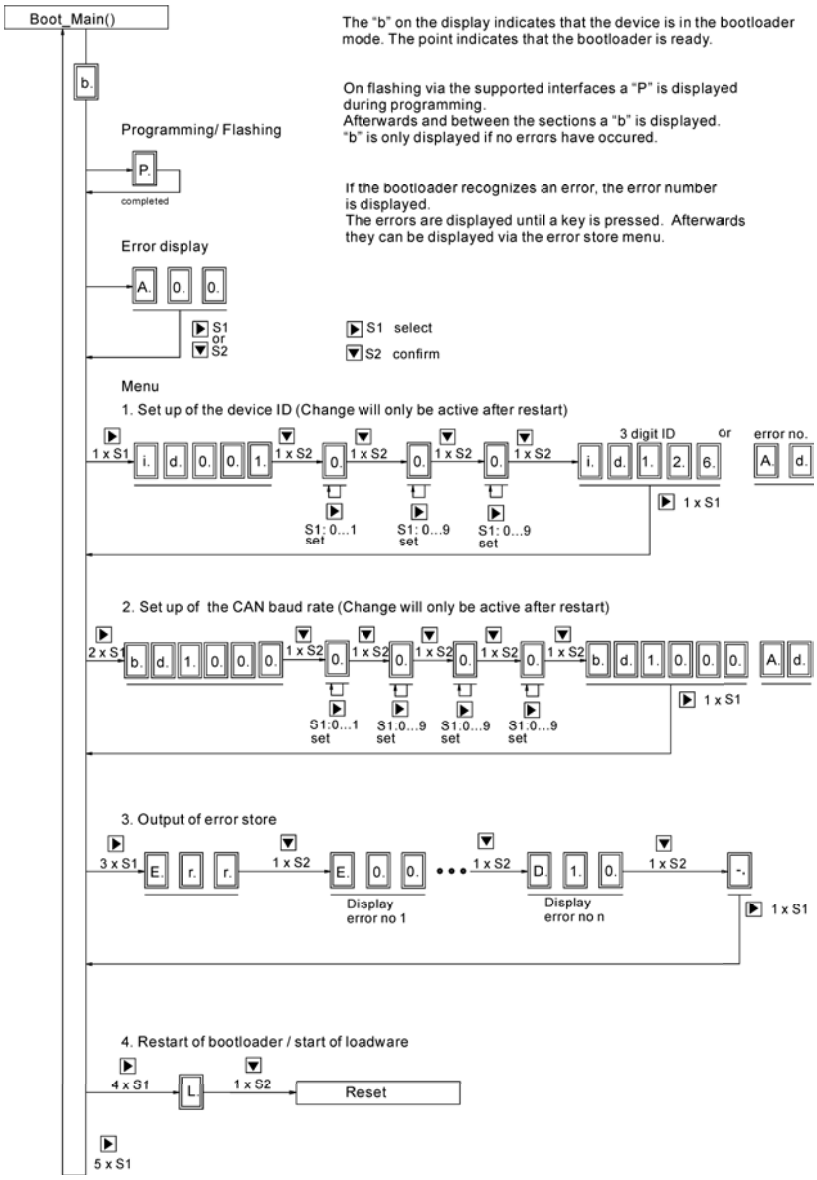

Fig. 7.1: Work schedule key operation

8 Parameter setting

By setting the parameter the ECOVARIO® is adjusted to the application. The parameters are set in the PC. The user interface ECO Studio is menu-driven and easy to handle.
There are several interfaces to connect the PC to the ECOVARIO®:

- USB interface (from Windows 2000® on, at ECOVARIO® 114 as an option)
- CAN interface
- RS232 interface (optional)
- Ethernet (optional)

8.1 User interface ECO Studio

How to work with the user interface ECO Studio is described in the ECO Studio online documentation. Further information on programming the ECOVARIO® can be found in the manual „Object Dictionary ECOVARIO® and ECOSTEP®“.

9 Accessories

Table 9.1: Survey of ECOVARIO® original accessories

Order key	Description	for ECOVARIO® type
Complementary parts		
DPX10	Heat sink for ECOVARIO® with mounting elements	ECOVARIO® 214/414
DPZ11	Shield set with 1 side part, 2 cable clamps and mounting elements	ECOVARIO® 214/414
DLZ11	Shield set with 1 side part and 10 cable ties	ECOVARIO® 114
DLZ12	Shield set with 1 side part, 1 shield clip and 5 cable ties	ECOVARIO® 114
DLZ13	Shield set with 1 side part and 2 shield clips	ECOVARIO® 114
DPK10	Mating connector set	ECOVARIO® 214/414
DLK10	Mating connector set	ECOVARIO® 114
Ballast resistors		
DPR10-100 (BWD250010J)	Ballast resistor 10 Ω/100 W (250 W cooled)	ECOVARIO® 114/214
DPR10-200 (BWD500010J)	Ballast resistor 10 Ω/200 W (500 W cooled)	ECOVARIO® 114/214
DPR24-100 (BWD250024J)	Ballast resistor 24 Ω/100 W (250 W cooled)	ECOVARIO® 414
DPR22-200 (BWD500022J)	Ballast resistor 22 Ω/200 W (500 W cooled)	ECOVARIO® 414
Accessories for parameterization		
VARIOSWITCH	VARIOSWITCH (diagnostic tool for ECOVARIO®)	ECOVARIO® 214/414
	ECOVARIO® starter kit USB: with USB cable A – B, CD with ECO software tools und diagnostic tool VARIOSWITCH	ECOVARIO® 214/414
	ECOVARIO® starter kit CAN: with CD with ECO software tools, diagnostic tool VARIOSWITCH, PCAN dongle with driver software, CAN cable with plug power pack	ECOVARIO® 214/414
Software tools		
	CD with ECO software tools and documentation	all
Transformers		
TD1500-85/105	3-phase transformer 85/105 V_{AC}/1500 VA	ECOVARIO® 214 Ax or ECOVARIO® 214 Bx with ECOBRAX 200-BA-000
TD1000-85/105	3-phase transformer 85/105 V_{AC}/1000 VA	ECOVARIO® 214 Ax or ECOVARIO® 214 Bx with ECOBRAX 200-BA-000
TE500-85/105	1-phase transformer 85/105 V_{AC}/500 VA	ECOVARIO® 214 Ax or ECOVARIO® 214 Bx with ECOBRAX 200-BA-000
TE500-42	1-phase transformer 42 V_{AC}/500 VA	ECOVARIO® 114
Power supplies		
SV24/85/105	1-phase transformer 85/105 V_{AC} with power supply 24 V_{DC}	ECOVARIO® 214 Ax or ECOVARIO® 214 Bx with ECOBRAX 200-BA-000
SV150	1-phase power supply 150 V_{DC} with brake chopper	ECOVARIO® 214 Bx
SV24	1-phase power supply 24 V_{DC}	all
ECOBRAX 200-BA-000	Power supply module	ECOVARIO® 214 Bx
Cables		
INK65-491-525-xxx	Encoder cable for motors with incremental or SINCOS encoder	all
ABS65-300-525-xxx	Encoder cable for motors with BiSS® encoder	all
MOT61-133-523-xxx	Motor cable for motors without brake	ECOVARIO® 214/414
MOT63-134-523-xxx	Motor cable for motors with brake	ECOVARIO® 214/414
MOT43-132-721-xxx	Motor cable extension for motors 23S without brake	ECOVARIO® 114
MOT34-132-722-xxx	Motor/brake cable extension for motors 23S with brake	ECOVARIO® 114

9.1 Supplementary parts

9.1.1 Heat sink

The heat sink set consists of:

- 1 heat sink DPX10 for ECOVARIO® 214/414
- 4 screws M4x16 (DIN 912*)
- 4 serrated lock washers 4.3 mm (DIN 6798*)

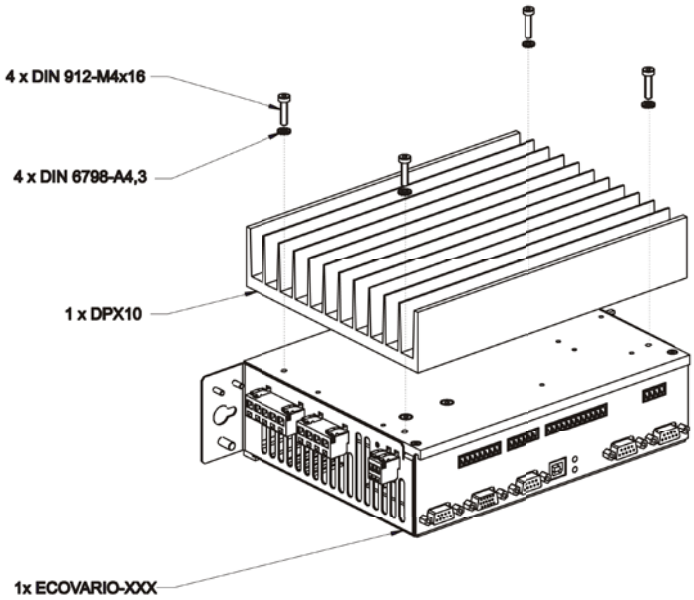

Fig. 9.1: Mounting heat sink

9.1.2 Shield set

The shield set DPZ11 (for ECOVARIO® 214/414) consists of:

- 1 shield clip 14 mm
- 1 shield clip 8 mm
- 1 shield plate
- 1 screw M3x6 (DIN 912*)
- 1 serrated lock washer 3.2 mm (DIN 6798*)

The shield set DLZ11 (for ECOVARIO® 114) consists of:

- 1 shield plate
- 1 screw M3x6 (DIN 912*)
- 1 serrated lock washer 3.2 mm (DIN 6798*)
- 10 cable ties

Mounting of the shield plate at the bottom of the servo amplifier is generally required. If shielded ballast resistors are used, additionally the upper shield plate is required, i.e., two shield sets are necessary in this case.

*) DIN 912 was substituted by DIN EN ISO 4762, DIN 6798 has been drawn back without being replaced. Because the naming is common it is kept up here.

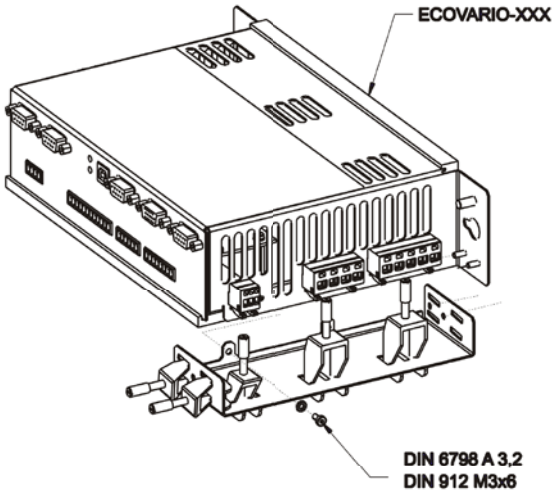

Fig. 9. 2: Mounting lower shield plate

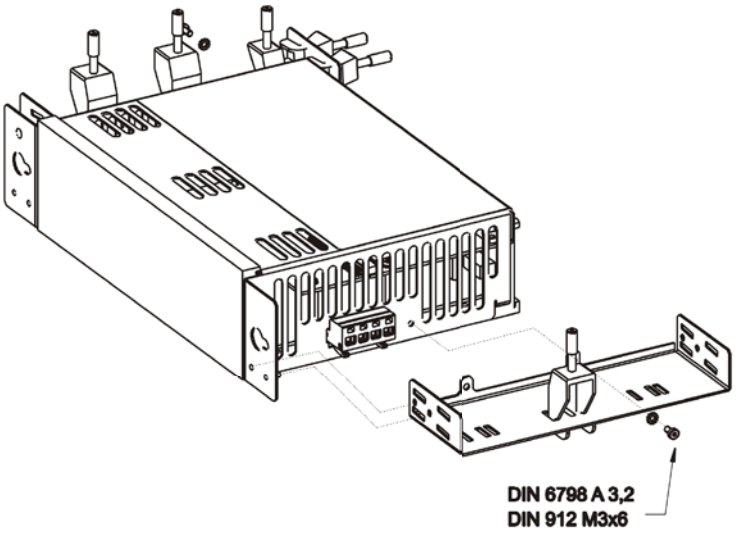

Fig. 9. 3: Mounting upper shield plate

9.2 Parameterizing accessories for ECOVARIO® 214/414

9.2.1 VARIOSWITCH

VARIOSWITCH is a plug-in module for the product family ECOVARIO® 214/414. It indicates the status of digital inputs and outputs and allows operations at digital and analog inputs via switches or pot.

VARIOSWITCH can be directly inserted into the connectors X1, X2 and X3 of the ECOVARIO®214/414. On its upper side it shows the ECOVARIO®'s connectors.

VARIOSWITCH is used for status indication when the unit is wired or for simulation of an input/output cabling.

WARNING		
	VARIOSWITCH serves only for commissioning the unit or testing it. It provides neither an emergency off nor any other safety functions! Especially in using linear systems with limit switches it is important to closely observe the status of the VARIOSWITCH because limit switches might be shunted by the switches of the VARIOSWITCH.	***VARIOSWITCH est seulement pour la mise en service et les essais fins. Il n'a pas un arrêt d'urgence et n'a pas des fonctions de sécurité!*** *En particulier en cours d'utilisation de systèmes linéaires avec fin de course faire attention à l'état de chaque commutateur VARIOSWITCH, depuis les interrupteurs peuvent être comblé avec les commutateurs de VARIOSWITCH.*

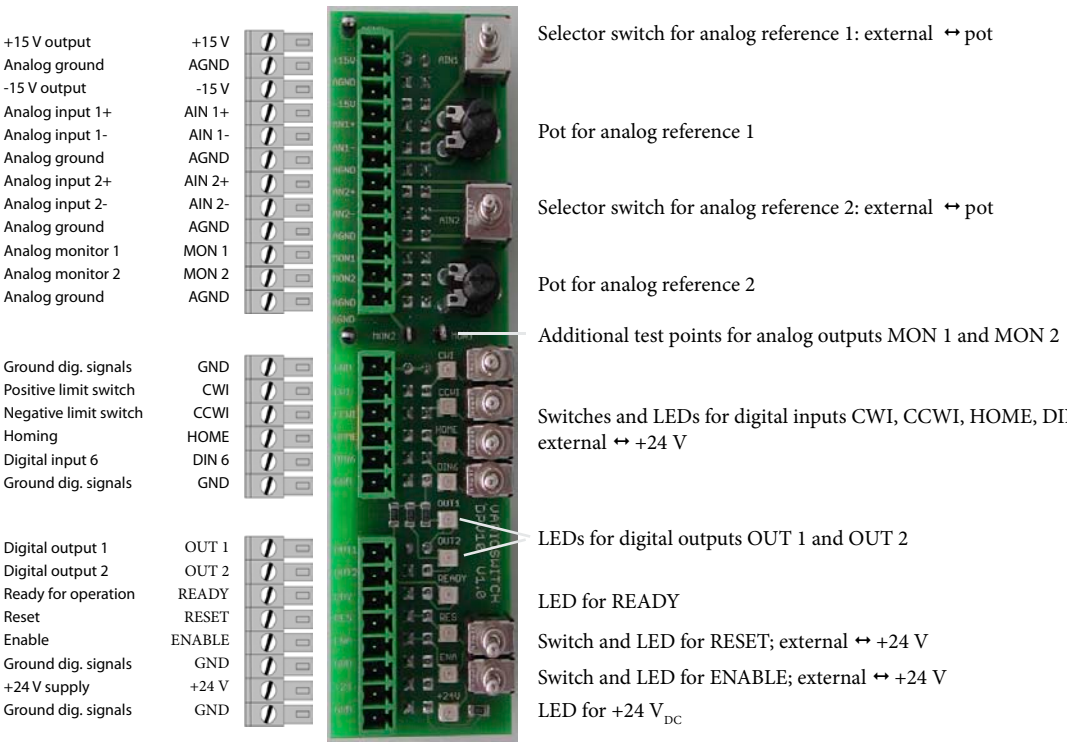

Fig. 9.4: Plug in module VARIOSWITCH for commissioning

Functions of VARIOSWITCH
Monitor functions:

- LED display of the unit's +24 V supply
- LED display of the status of the digital inputs and outputs
- Oscilloscope pick-off for analog monitor signals

Simulation functions:

- - switch-selectable assignment of the digital inputs with external signal or +24 V
- - switch-selectable assignment of the analog inputs with external signal or +10 V via pot

9.2.2 Starter kit ECOVARIO®, USB version

The starter kit contains all necessary accessories for commisioning or testing the servo amplifier ECOVARIO® 214/414.
Components::

- 1 USB cable A – B
- 1 VARIOSWITCH
- 1 CD ECO software tools with ECO Studio setup software and documentation

Das USB cable A – B connects die USB interface of the ECOVARIO® (USB connector type B) with a PC (USB connector type A).

9.2.3 Starter kit ECOVARIO®, CAN version

If parameterization or testing of the ECOVARIO® 214/414 shall be carried out via the optional CAN interface the ECOVARIO® can be controlled with the CAN accessories from a PC.
The starter kit contains all necessary accessory for commisioning or testing the ECOVARIO® 214/414.
Components:

- 1 CAN cable with power pack
- 1 USB PCAN dongle with driver software
- 1 VARIOSWITCH
- 1 CD ECO software tools with ECO Studio setup software and documentation

9.3 Ballast resistors

Series DPR ballast resistors are short circuit proof, intrinsically safe resistors with an eloxated aluminium casing.

Intrinsically safe on continuous overload and free convection:

- no short circuit
- no fault to frame
- no fire
- no melting of the casing

Protection class: IP65
Approvals: cCSAus, cURus
Note: Mounting in a built-up of heat casing temperatures up to 350 °C may occur.
Braided wire of the connecting cables: length: 510 ±40 mm, Ø AWG16 or 1,5 mm² resp.

The scope of delivery contains elbow joints with mounting elements.

9.3.1 Ballast resistors 100 W (250 W cooled)

DPR10-100: 10 Ω/100 W (250 W cooled) for ECOVARIO® 114/214
DPR24-100: 24 Ω/100 W (250 W cooled) for ECOVARIO® 414

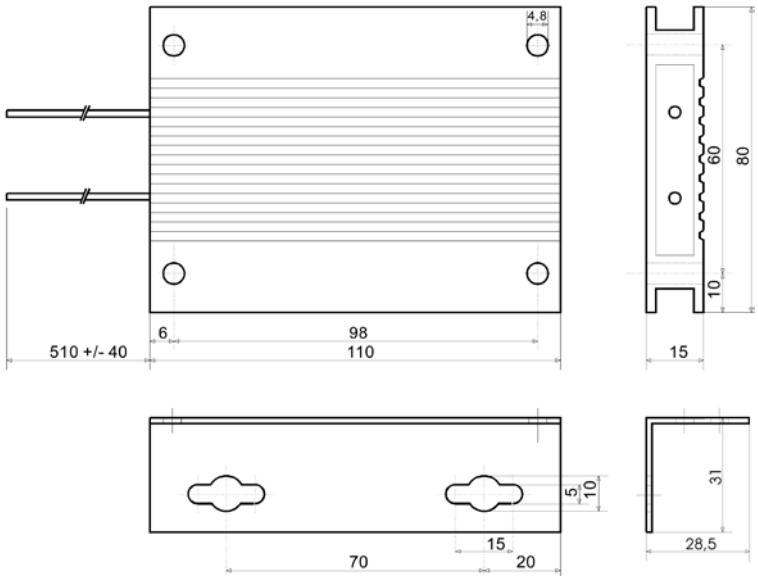

Fig. 9.5: Dimensions of ballast resistor DPRxx-100 (above) and elbow joint (below)

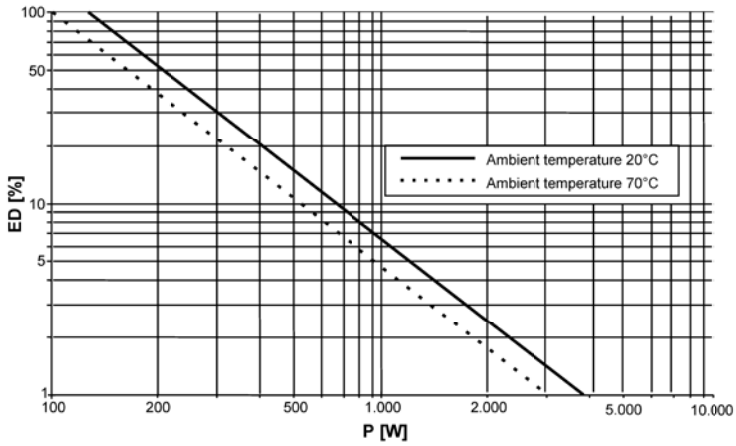

Fig. 9.6: Pulse strength ballast resistors DPRxx-100 (without restriction of durability), ED = duty cycle

All cases on the left side below the characteristic in fig. 9.6 are covered by the ballast resistors DPRxx-100.

Frame conditions:
Basis is the normal cycle time of 120 s. The casing temperature be determined with the temperature diagram in fig. 9.7 on the basis of the average power. The avarage power is calculated as follows:

$$P_m = P[W] \text{ x duty cycle } [\%]/100 \qquad (4)$$

The value taken from fig. 9.7 plus 5 K amounts to the casing temperature at the chosen pulse strength.

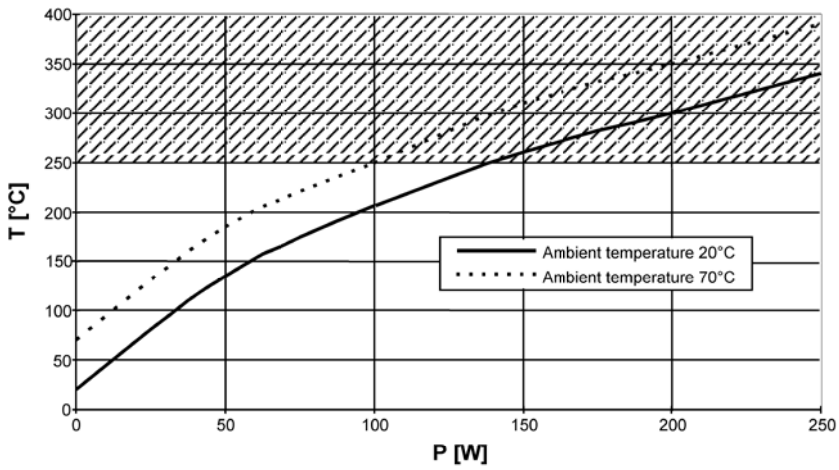

Fig. 9.7: Casing temperature of the ballast resistor DPRxx-100 at CDF = 100 %, max. T = 250 °C

9.3.2 Ballast resistors 200 W (500 W cooled)

DPR10-200: 10 Ω/200 W (500 W cooled) for ECOVARIO® 114/214
DPR22-200: 22 Ω/200 W (500 W cooled) for ECOVARIO® 414

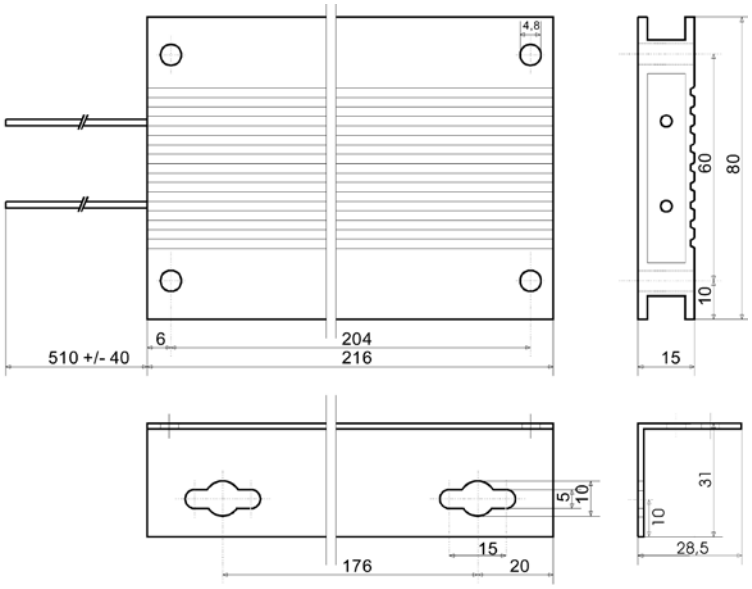

Fig. 9.8: Dimensions ballast resistor DPRxx-200 (above) and elbow joint (below)

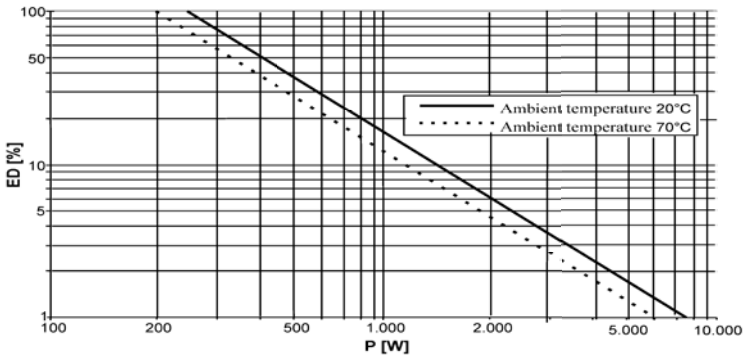

Fig. 9.9: Pulse strength ballast resistor DPRxx-200 (without restriction of durability), ED = duty cycle

All cases on the left side below the characteristics in fig. 9.9 are covered by the ballast resistors DPRxx-200.

Frame conditions:
Basis is the normal cycle time of 120 s. The casing temperature be determined with the temperature diagram in fig. 9.10 on the basis of the average power. The avarage power is calculated according to formula (4). The value taken from fig. 9.10 plus 5 K amounts to the casing temperature at the chosen poulse strength.

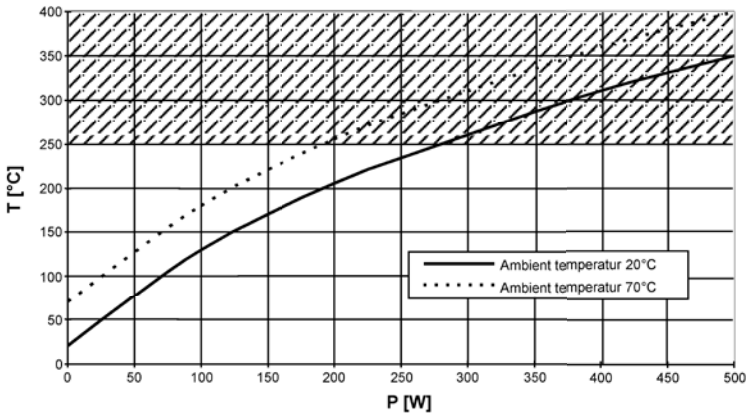

Fig. 9.10: Housing temperature ballast resistor DPRxx-200 at CDF = 100 %, max. T = 250 °C

9.4 Mating connector set ECOVARIO®

A mating connetor set for all interfaces of the ECOVARO® is available. All mating connectors are clearly labelled and designed in a way that there is no danger of mixing them up.

Table 9.2: Composition of ECOVARIO® 214/414 mating connector set DPK10

Connector	Function	Mating connector designation, Phoenix ID No.
X1	24 V/digital inputs and outputs	MC 1,5/8-ST-3,81, 18 03 63 3
X2	Digital inputs	MC 1,5/6-ST-3,81, 18 03 61 7
X3	Analog inputs and outputs	MC 1,5/12-ST-3,81, 18 03 67 5
X4	DC link/ballast resistor	ZEC1,5/4-ST-7,5 C1,2R1,4NZX4, 19 98 19 5
X5	Motor connection	ZEC1,5/5-ST-7,5 C2,5R1,5NZX5, 19 98 17 9
X6	Power connection	ZEC1,5/4-ST-7,5 C2,4R1,4NZX6, 19 98 18 2
X7	Motor brake	ZEC1,0/3-ST-3,5 C1,3R1,3NZX7, 19 98 20 5
X8	Restart lock	MC 1,5/4-ST-3,81, 18 03 59 4

Table 9.3: Composition of ECOVARIO® 114 mating connector set DLK10

Connector	Function	Name of mating connector, Phoenix
X1	24 V/digital inputs/outputs	MC 1,5/8-ST-3,81 CN2,7 BDNZX1, Nr. 17 55 40 2
X2	Digital inputs, analog input	MC 1,5/8-ST-3,81 CN1,8 BDNZX2, Nr. 17 55 41 5
X4	DC link voltage / ballast resistor	ZEC1,5/4-ST-5,0 C1,2 R1,4 4BDNZ4, Nr. 17 55 37 6
X5	Motor connection	ZEC1,5/5-ST-5,0 C2,5 R1,5 5BDNZ5, Nr. 17 55 38 9
X6	Power connection	ZEC1,5/3-ST-5,0 C2,3 R1,3 3BDNZ3, Nr. 17 55 39 2
X7	Motor brake	ZEC1,0/3-ST-3,5 C1,3R1,3 Nr. 19 98 20 5

9.5 Cables

The insulated shield mesh of the cables must be connected to the device potential or the PE conductor resp. If the grounding is improper or the mesh lies freely dangerous voltages may occur. The following table lists the cables available for connection of the motors of Jenaer Antriebstechnik GmbH. If other cables are used functional errors of the drive and EMC problems might occur. If you intend to use other cables please double-check with our application department whether your cables are appropriate.

Table 9.4: ECOVARIO® accessories, cable

Cable type	Use	Characteristic
Encoder cables		
INK65-491-525-xxx	Encoder cable for motors with incremental or SINCOS encoders	shielded, twisted in pairs (4x(2x0.14)+(2x0.5)), Ø: 9.5mm, trailing capability from bending radius >120mm
ABS65-300-525-xxx	Encoder cable for motors with BiSS® encoders	
Motor cables		
MOT61-133-523-xxx	Motor cable for motors without brake (ECOVARIO® 214/414)	shielded, 5xAWG16, up to 12 A, 600 V, Ø: 8.9 mm, trailing capability from bending radius >125 mm
MOT63-134-523-xxx	Motor cable for motors with brake (ECOVARIO® 214/414)	shielded, (5xAWG16)+(2xAWG16), up to 12 A, 600 V, Ø: 10.8 mm, trailing capability from bending radius >105 mm
MOT43-132-721-xxx	Motor cable extension for ECOSTEP motors series 23S (ECOVARIO® 114)	shielded, 5xAWG20, up to 6 A, 300 V, Ø: 6.5 mm, trailing capability from bending radius >35 mm
MOT34-132-722-xxx	Motor/brake cable extension for ECOSTEP motors series 23S (ECOVARIO® 114)	shielded, 7x7.5, up to 8A, 300/500V, Ø: 10.5 mm, trailing capability

All cables in table 9.4 are available up to 50 m. All cables are trailing cables.

10 Appendix

10.1 Glossary

Ballast circuit	A ballast circuit transforms energy that is fed back into the DC link during braking of a motor into heat. Thus it is made sure that the DC link voltage does not increase too much.
Baud rate	Unit of measure for the transmission rate of data in serial interfaces. The baud rate indicates the number of possible changes of state of the transmitted signal per second (1 baud = 1 state change/s). The baud rate can be lower than the bit rate (one bit is coded in several signal states). „Baud rate“ in this document refers to signals in which one bit is defined with the two signal states HIGH and LOW. In this case the bit rate equals the baud rate.
BISS®	Bidirectional sensor interface of iC-Haus GmbH, Bodenheim
Bitrate	Transmission rate of information in bit/second
Bootloader mode	State of the servo amplifier in which a new loadware can be transmitted into the servo amplifier‘s memory.
Brake chopper	The brake chopper circuit produces a high inrush current, that initiates a quick pulling of the brake. After pulling the brake the current is reduced to a lower holding current.
Capture input	Control input for quick event capture of a machine or plant
Circuit breaker	Switch that cuts the power if an error current limit is exceeded
DC link voltage	Smoothed DC voltage
Disable	Take back ENABLE signal for the servo amplifier: ENABLE input = 0 V
Encoder	Measuring system, that transforms the angular position of a shaft or the position of a linear system into coded data
EMC	Electromagnetic compatibility
Enable	enable signal for the servo amplifier (24 V_{DC} signal)
ESD protection	Protection against electrostatic discharge
Field bus interface	Here: CAN or PROFIBUS DP-V0
Firmware	Part of the software that is stored to ROM (read-only memory), the firmware contains the start-up routines.
Ground fault	Here: electrically conductive connection between a power system or motor phase and the PE conductor

HIPERFACE®	Universal interface for electric actuators by SICK STEGMANN GmbH, Donaueschingen
Host	Computer in a multi computer system that controls the whole system
ID number	Identification number of a special device in a bus structure
Loadware	Part of the software that can be stored to the flash memory of the servo amplifier
Node	Device connection in a bus structure
Positively-opening contacts	Form of relays and contactors that prevents single contacts from switching in case of errors
Repeater	Equipment for reinforcing and regenerating of signals in a network
Restart lock (AS)	Technical measure that prevents actuators safely by mechanical elements (positively driven contacts) from restarting indeliberately.
RMS	Root mean square
Sequencer programming	Programming a work schedule in which a sequence of events is defined depending on external states (input data), internal states (actual values) or time states
Short circuit	Here: electrically conductive connection between two power systems or motor phases
STO function	Safe Torque Off; safety function defined in EN DIN 61800-5-2. The motor is not supplied with energy and cannot generate a rotation. The STO function is used for the implementation of the restart lock.
Token passing	Hybrid access method for multimaster systems; token passing uses a token, or series of bits, to grant a master permission to transmit over the network, while the transmission between master and slave is carried out after the master-slave principle
Token system	In networking, a token is a special series of bits that travels around a token-ring network. As the token circulates, computers attached to the network can capture it. The token acts like a ticket, enabling its owner to send a message across the network. There is only one token for each network, so there is no possibility that two computers will attempt to transmit messages at the same time.
Watchdog	Supervisory software

10.2 Index of formulae

(1) Energy difference E_{BR}: $E_{BR} = ½ J (\omega_1^2 - \omega_2^2)$
(2) Regenerable energy E_{N-P}: $E_{N-P} = ½ C_L (U_{BUSP}^2 - U_{BUSN}^2)$
(3) Supply voltage U_P: $U_P = 5V ((R1/R2) +1)$
(4) Average power m_m: $m_m = P[W] x ED [\%]/100$

10.3 Index of standards and directives

DIN 912: replaced by DIN EN ISO 4762

DIN 6 798: drawn back without replacement

DIN EN 50 170: General purpose field communication system

DIN EN 50 178 Electronic equipment for use in power installations

DIN EN 60 204: Safety of machinery - electrical equipment of machines - Part 1: General requirements

DIN EN 61 800-3: Adjustable speed electrical power drive systems - Part 3: EMC product standard including specific test methods

DIN EN 61800-5-1: Adjustable speed electrical power drive systems - Part 5-1: Safety requirements; Electrical, thermal and energy

DIN EN 61800-5-2: Adjustable speed electrical power drive systems - Part 5-2: Safety requirements; Functional safety

DIN EN ISO 4762: Hexagon socket head cap screws

DIN EN ISO 12100-1: Safety of machinery - Basic concepts, general principles for design - Part 1: Basic terminology, methodology

DIN EN ISO 12100-2: Safety of machinery - Basic concepts, general principles for design - Part 2: Technical principles

DIN EN ISO 13 849-1:2006 Safety of machinery − Safety-related parts of control systems − Part 1: General principles for design

IEC 61000-4-2: Electromagnetic compatibility (EMC) - Part 4-2: Testing and measurement techniques - Electrostatic discharge immunity test

IEC 61000-4-4: Electromagnetic compatibility (EMC) - Part 4-2: Testing and measurement techniques - Electrical fast transient/burst immunity test

2006/42/EC: Directive of the European Parliament and the Council on the approximation of the laws of the Member States relating to machinery

2006/95/EC: Council Directive on the harmonization of laws of Member States relating to electrical equipment designed for use within certain voltage limits

2004/108/EC: Council Directive on the approximation of the laws of the Member States relating to Electromagnetic Compatibility