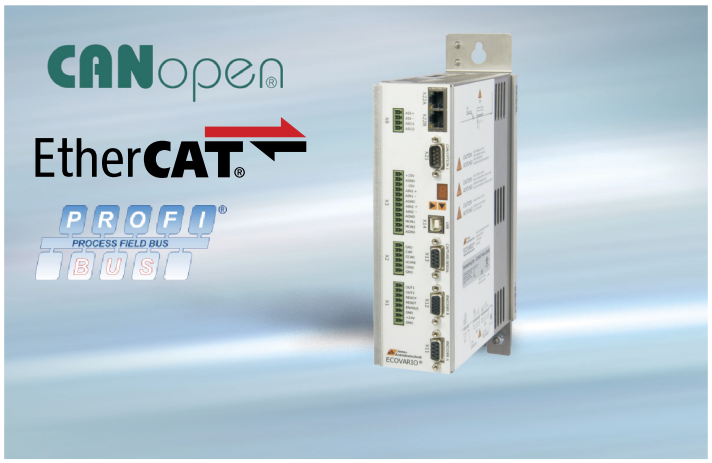

Equipment

- EtherCAT/Ethernet interface
- CANopen
- Profibus DP
- USB interface for parameterisation via PC
- RS485 with 2 capture inputs
- 2 encoder interfaces
- Encoder output for Master-Slave-operation, or
- Safe Torque Off (STO) according to EN61800-5-2

Functions

- Operation of 2- and 3- phase brushless synchronous motors
- Operation of 2-and 3-phase synchronous linear motors
- Operation of brushed DC servo motors
- Torque / force, speed, and positioning control
- Position feedback via incremental encoder: RS422, SINCOS
- Position feedback via absolute value encoder: BISS® or HIPERFACE® interface
- Simultaneous use of several feedback systems possible
- Interpolation via EtherCAT or CANopen

Electrical Connection Data		2-phase Motors	3-phase Motors
1-phase AC Supply			
Rated supply voltage	V_{AC}	105	105
Line frequency	Hz	50 .. 60	50 .. 60
Rated installed load	kVA	1	1
Rated power loss	W	62	62
Rated output voltage (AC)	V_{AC}	85	85
Rated output current	A_{RMS}	2.7	3.5
3-phase AC Supply			
Rated supply voltage	V_{AC}	105	105
Line frequency	Hz	50 .. 60	50 .. 60
Rated installed load	kVA	1.4	1.4
Rated power loss	W	89	89
Rated output voltage	V_{AC}	95	95
Rated output current	A_{RMS}	5.3	7.1
DC Supply			
Rated supply voltage	V_{DC}	150	150
Rated installed load	W	1500	1500
Rated power loss	W	75	75
Data of Power Output Stage			
Peak output current	A_{RMS}	14	14
Max. phase current	A_{DC}	20	20
Rated output current	A_{RMS}	5.3	7.1
Max. DC link voltage	V_{DC}	170	170
Rated DC link voltage	V_{DC}	150	150
Overvoltage switch-off	V_{DC}	200	200
DC link capacity (AC/DC supply)	µF	2000/1000	2000/1000
Returnable energy (AC/DC supply)	Ws	10/5	10/5

Control Signals		
24-V supply (current consumption without output)	V	24 ±10%
	A	0.8
6 digital control signal inputs	V	LOW 0-7, HIGH 12-36
	mA	10 (at 24 V)
3 digital control signal outputs	V	24
	A	0.5
2 analogue inputs	V	-10 to +10
2 analogue monitor outputs		10 bit resolution
Dimensions and Weights		
Dimensions W x H x D	mm	62 x 279 x 167
Weight	kg	2.1
External Fuses		
AC supply		10 A (slow-acting)
24-V supply		max. 12 A (fast-acting)
external ballast resistor (not required if resistors for specific use DPRxx-xxx are used)		6 A (fast-acting)

Ambient Conditions	
Class	3K3 acc. to EN 50178
Ambient temperature during operation with rated load	5 °C .. 40 °C (storage temperature: - 10 ... 70°C)
Degree of humidity (non-condensing)	max. 95% rel. humidity
Cooling	In a closed cabinet, sufficient circulating air movement must be provided
Installation altitude	max. 1500 m above mean sea level without power reduction
Mounting position	The technical data refer to a vertical mounting position
Protection class	IP20, pollution degree 2
Applied standards for CE	EMC acc. to EN61800-3, safety acc. to EN61800-5-1 For devices with safety function STO: EC machine directive 2006/42/EC
Applied standards for UL	UL508C

Basic Functions

- Digital current, speed, and position control with position, speed and torque limiting
- Digital filter functions effective on resonant loads
- Parameterisable velocity profiles with jerk limiting
- Short-circuit, voltage, temperature, encoder, tracking error, and I^2xt monitoring
- Parameterisation via EtherCAT, Ethernet, CANopen, USB, RS232, RS485, Profibus DP
- Scalable analogue inputs for any setpoint
- Scalable analogue monitor outputs for any actual value
- Intelligent control of a holding brake with automatic voltage reduction
- Limit switch and reference sensor evaluation, various homing modes
- Enabling of output stage and reset of fault conditions via digital input
- Readiness for operation message via digital output
- Status indication and setting of field bus node address and baud rate on the front via seven-segment display and 2 keys

Positioning control on field bus

- Setpoint setting via Ethernet, EtherCAT, CANopen, Profibus DP, RS232 or RS485
- Point-to-point control
- Motion Control / Path interpolation via CANopen or EtherCAT

Master/slave positioning

- Parameterisable electric gearbox
- Master position via encoder signals or CANopen

Positioning with clock/direction setpoint

- Scalable setpoint setting via RS422 for clock/direction signals

Positioning control with digital I/O interface

- 256 motion profiles storable
- 8 digital inputs
- 2 digital outputs
- Event-based control concept

Joystick operation

- Parameterisable joystick table for speed or position with 256 entries
- Joystick connection to +/-10 V analogue input

Speed setting with analogue setpoint

- Scalable speed setpoint via +/-10 V analogue input
- 10 bit resolution

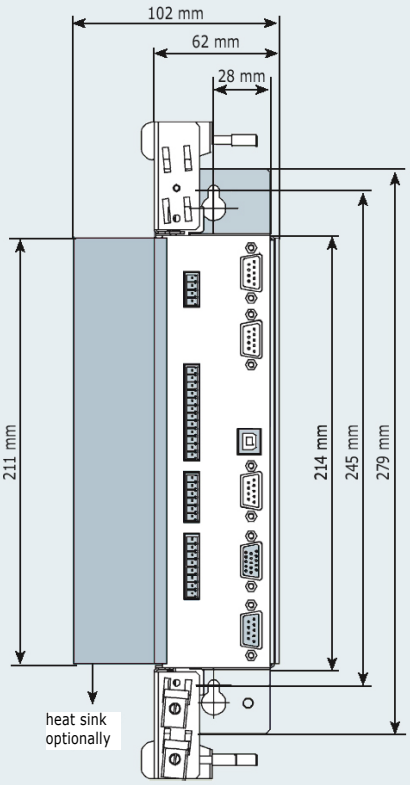

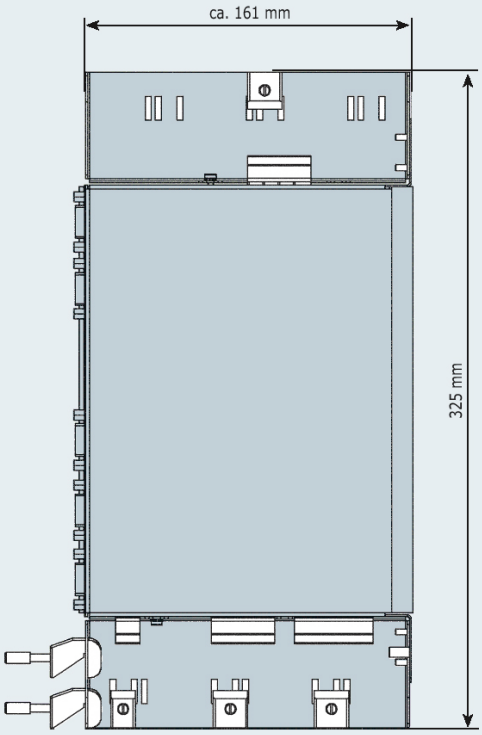

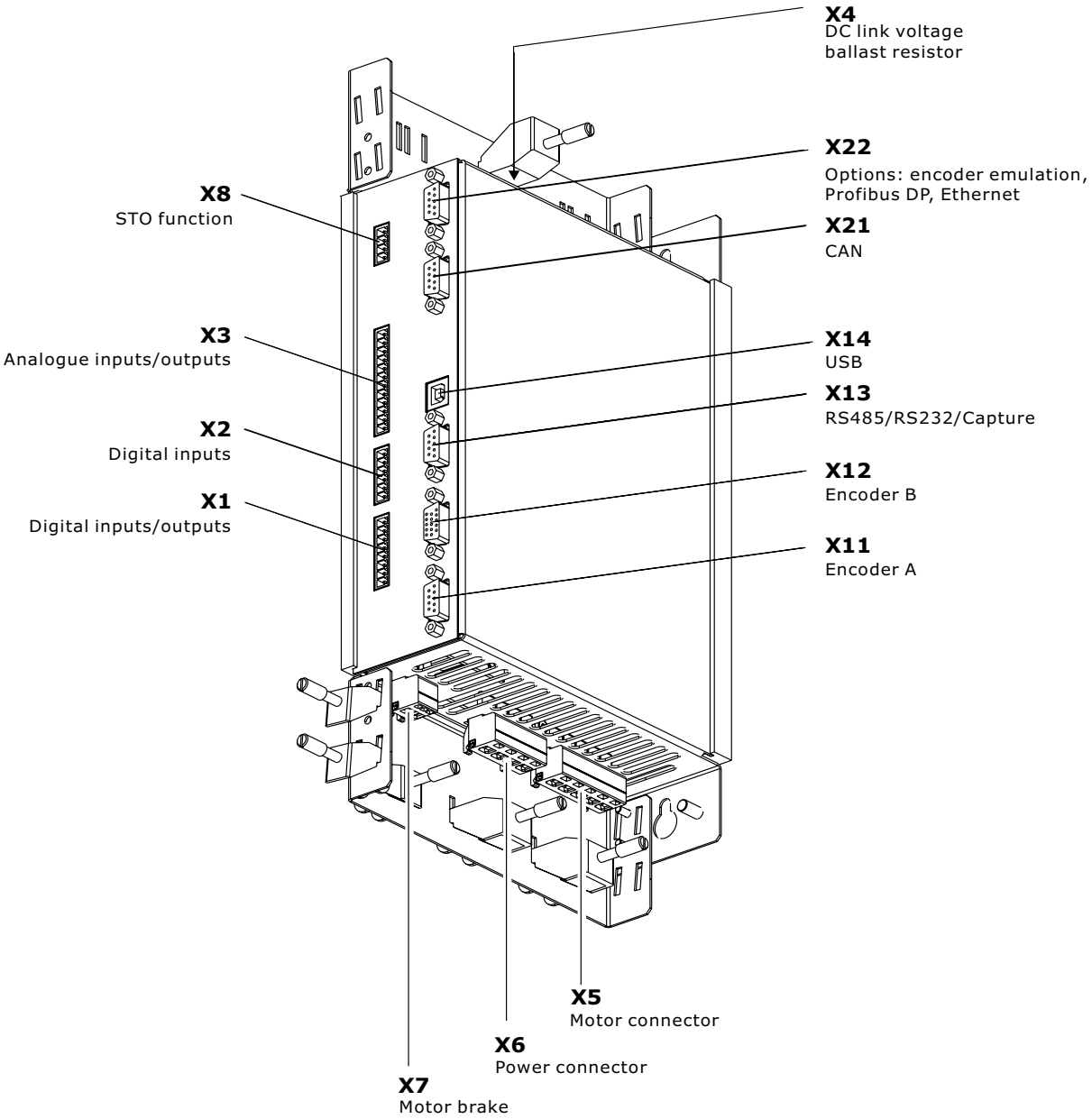

Accessories	
Complementary parts	
DPZ11	Shield set with 1 side part, 2 cable clamps and mounting elements
DPK10	Connector set ECOVARIO® 214/414
Ballast resistors	
DPR10-100	Ballast resistor 10 Ω/100 W (250 W cooled)
DPR10-200	Ballast resistor 10 Ω/200 W (500 W cooled)
Power Supplies	
SV24	Single-phase power supply unit 24 V_{DC} / 5 A
SV24/85/105	Single-phase power supply unit 24 V_{DC} / 4 A, 85 or 105 V_{AC} / 650 VA
TE500-85/105	Single-phase transformer 85/105 V_{AC} / 500 VA
TD1000-85/105	Three-phase transformer 85/105 V_{AC} / 1000 VA
TD1500-85/105	Three-phase transformer 85/105 V_{AC} / 1500 VA
For details concerning the power supplies please refer to data sheet **11-2**.	

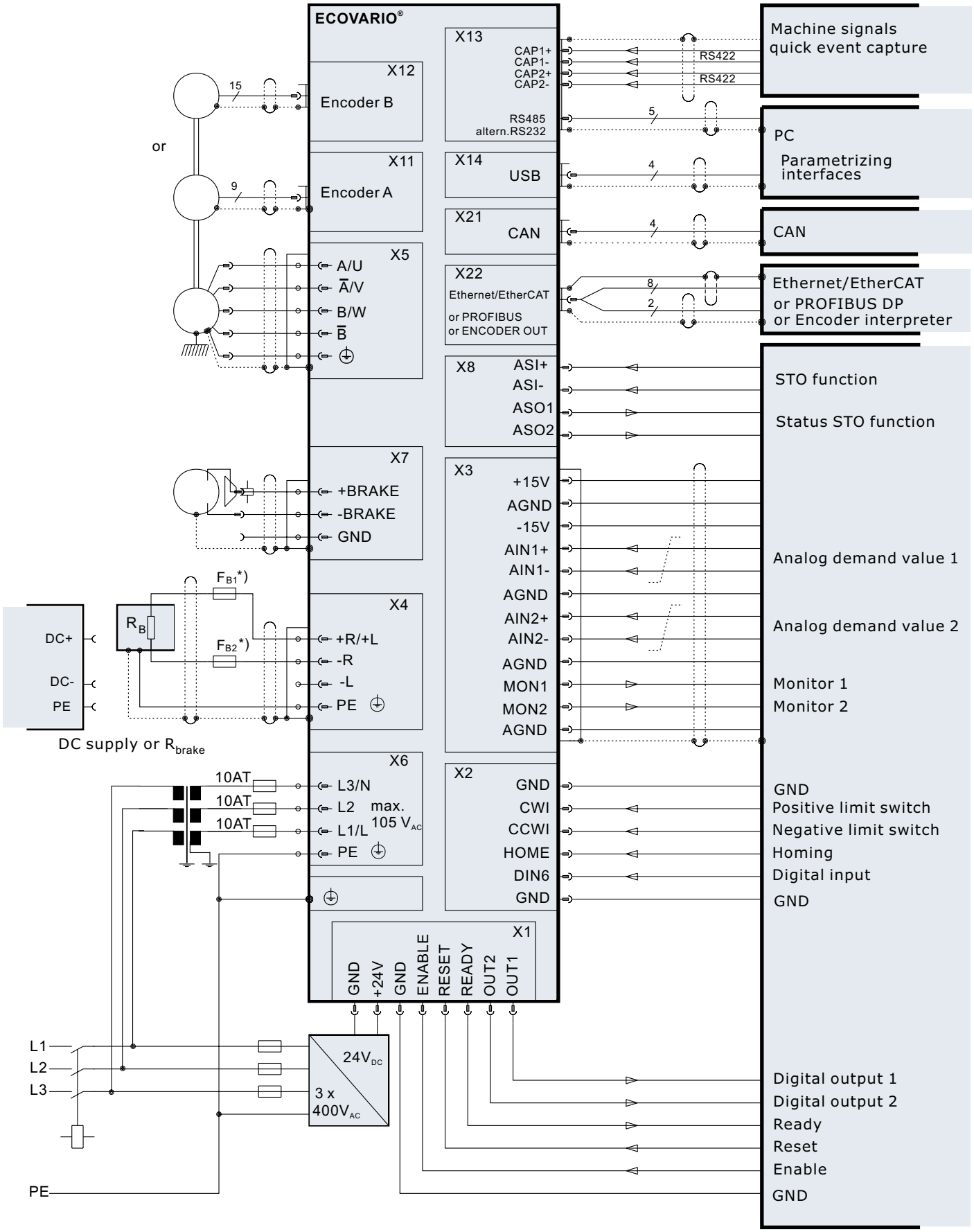

*) not necessary if ballast resistor DPRxx is used

Jenaer Antriebstechnik GmbH • Buchaer Str. 1 • D-07745 Jena • Tel.: +49 (0) 36 41 / 6 33 76- 55 • Fax: +49 (0) 36 41 / 6 33 76-26